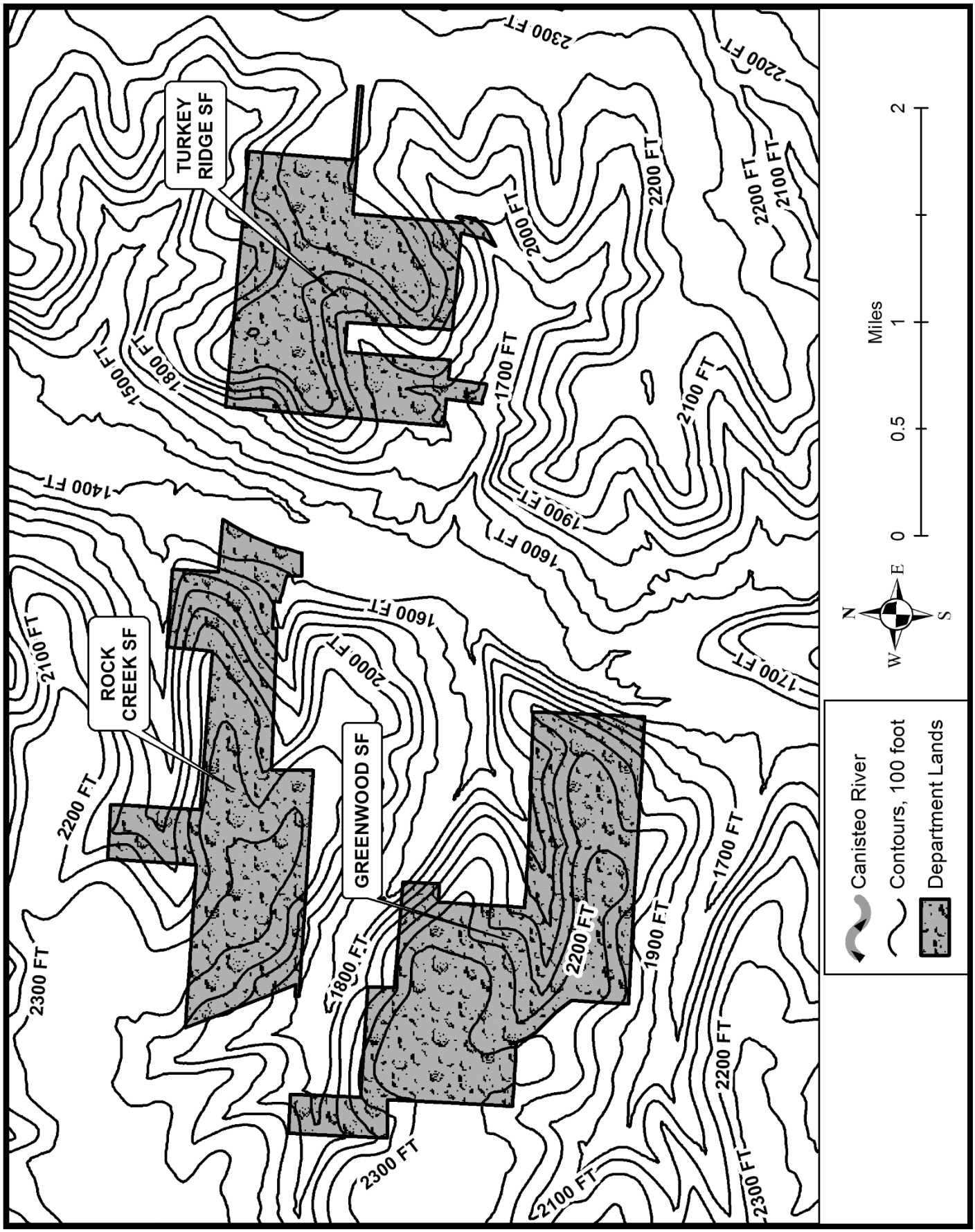
TURKEY RIDGE SF
ROCK CREEK SF
GREENWOOD SF
2300 FT
2200 FT
2100 FT
2000 FT
1900 FT
1800 FT
1700 FT
1600 FT
1500 FT
1400 FT
Canisteo River
Contours, 100 foot
Department Lands
N
S
E
W
0
0.5
1
2
Miles

Geology – Oil, Gas, and Solution Mining Map

See also Mineral Resources (pg. 36) and Mineral Resource Management (pg. 114).

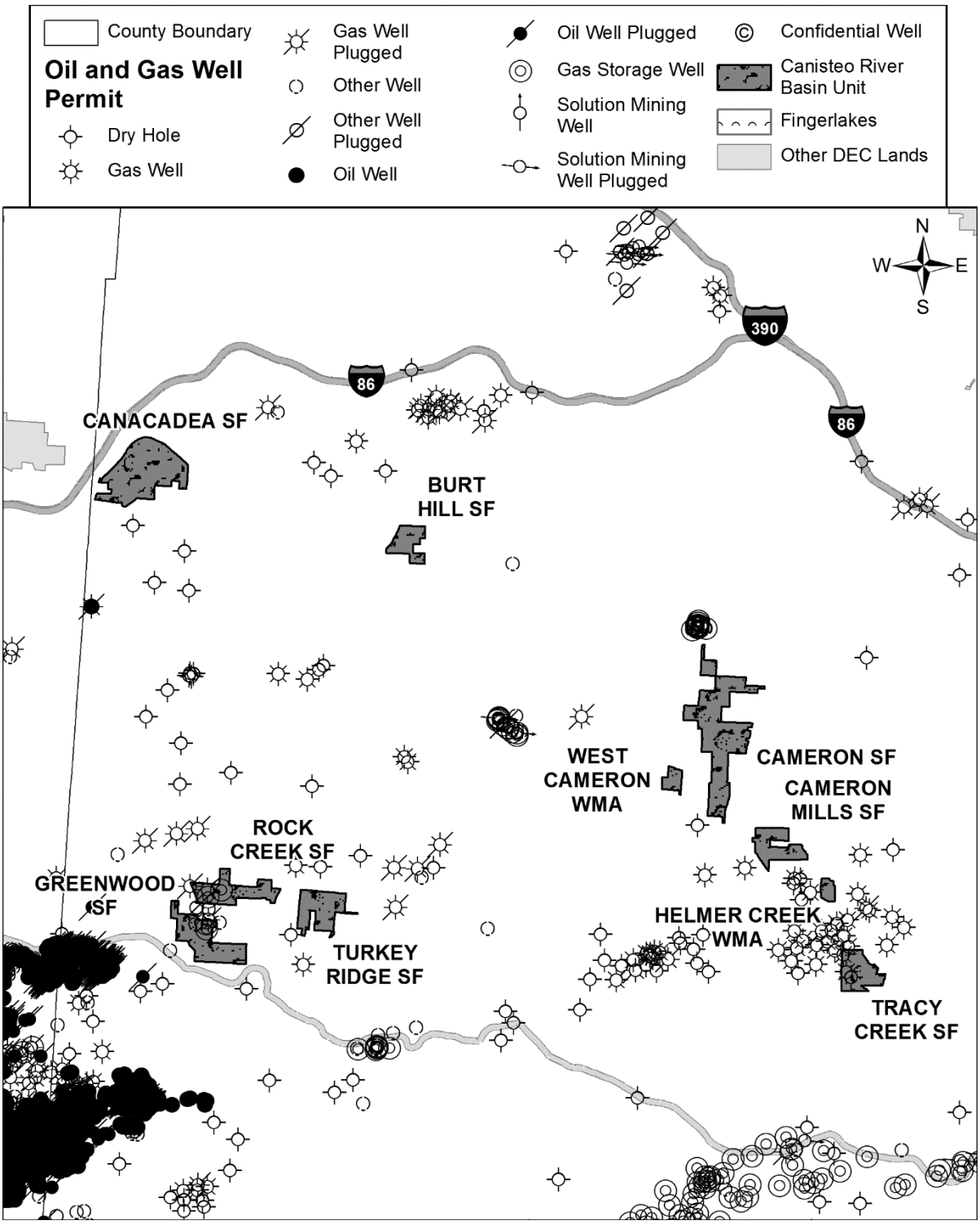

Geology - Sand, Gravel and Other Mine Locations

See also Mineral Resources (pg. 36) and Mineral Resource Management (pg. 114).

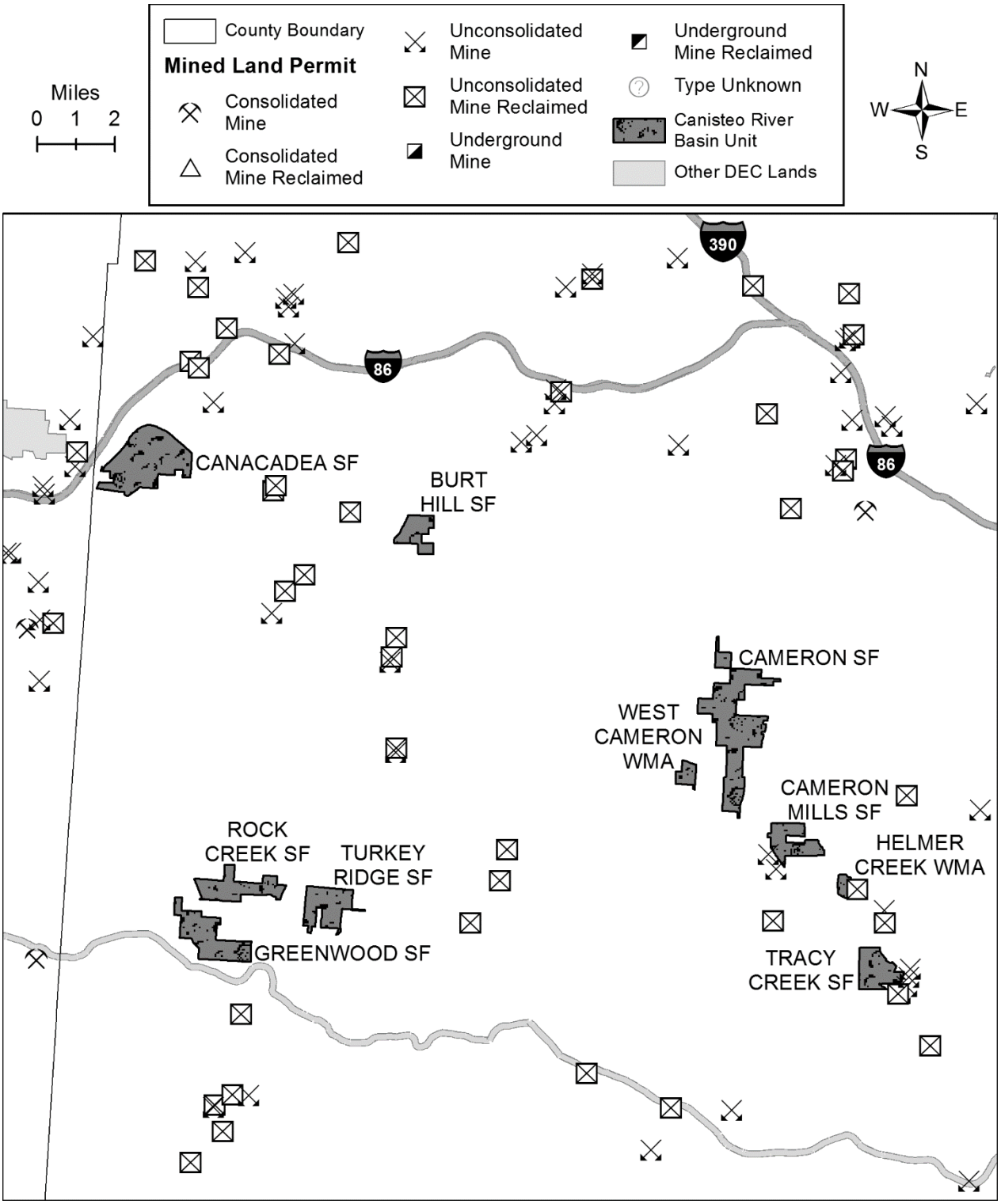

Soil Maps

To make these maps easier to read, the following soil type maps have been greatly simplified. For greater detail and information please look online at https://websoilsurvey.nrcs.usda.gov/app/ or contact the Steuben NRCS offices. See also Soils (pg. 31) and Table 5: Soils (pg. 31).

Table M1: Soil Type Key

Key No.	Soil Type	Acres	Percent
1	Alton gravelly fine sandy loam	6	0.1%
2	Arnot channery silt loam	739	9.6%
3	Bath channery silt loam	19	0.2%
4	Bath soils	194	2.5%
5	Carlisle muck	11	0.1%
6	Chenango channery silt loam, fan	10	0.1%
7	Chippewa channery silt loam	25	0.3%
8	Fluvaquents and Ochrepts	86	1.1%
9	Fremont silt loam	188	2.4%
10	Hornell-Fremont silt loams	624	8.1%
12	Hornell and Fremont silt loams	909	11.8%
13	Hornell and Fremont silty clay loams	16	0.2%
14	Howard-Madrid complex	48	0.6%
15	Kanona silty clay loam	343	4.5%
16	Lackawanna channery silt loam	48	0.6%
18	Lordstown channery silt loam	170	2.2%
17	Lordstown-Arnot association	1543	20.0%
20	Mardin channery silt loam	1371	17.8%
19	Mardin and Volusia channery silt loams, silty substratum	49	0.6%
21	Ochrepts and Orthents	154	2.0%
22	Tioga silt loam	9	0.1%
23	Tuller channery silt loam	10	0.1%
24	Unadilla silt loam	2	0.0%
25	Volusia channery silt loam	1100	14.3%
26	Water	31	0.4%

To make these maps easier to read, the following soil type maps have been greatly simplified. For greater detail and information please look online at http://soildatamart.nrcs.usda.gov or contact the Steuben NRCS offices.

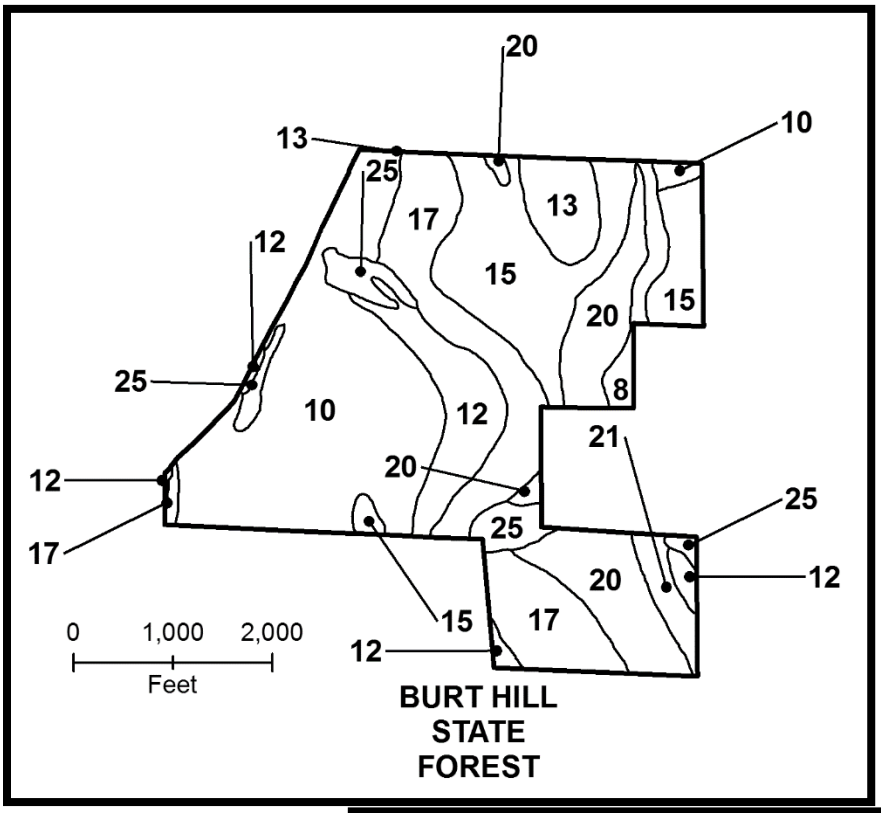

See also Soils (pg. 31) and Table 5: Soils (pg. 31).

Table M1: Soil Type Key is on page 252.

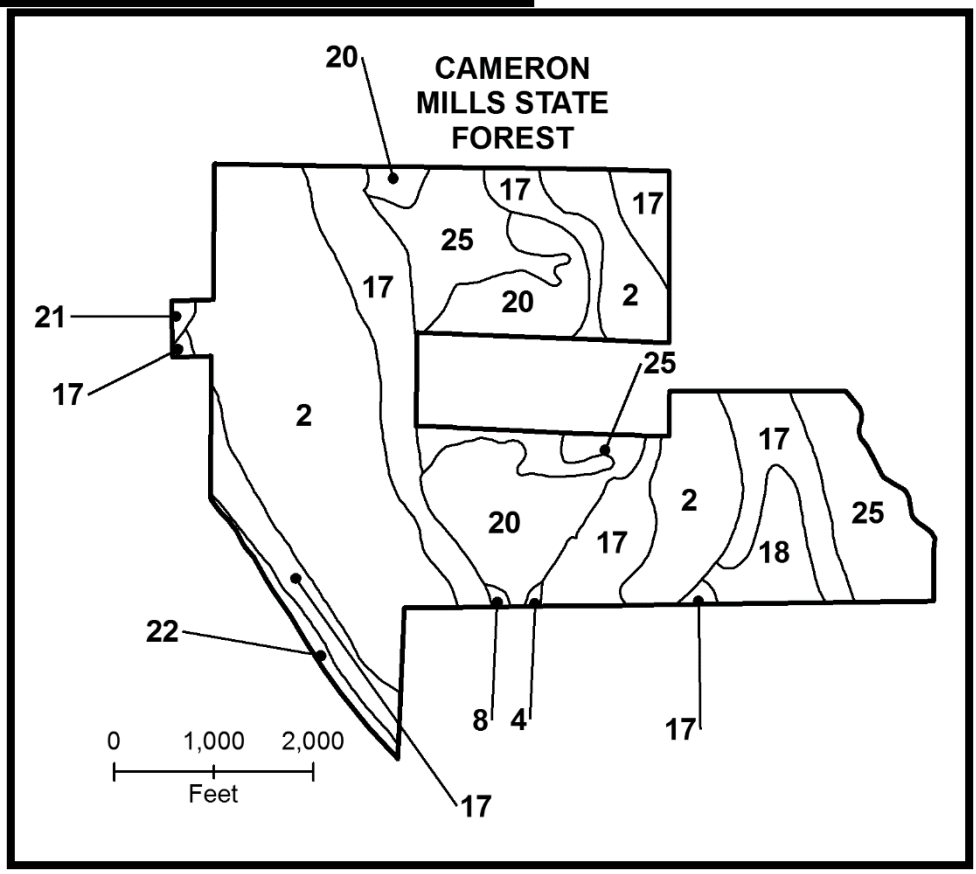

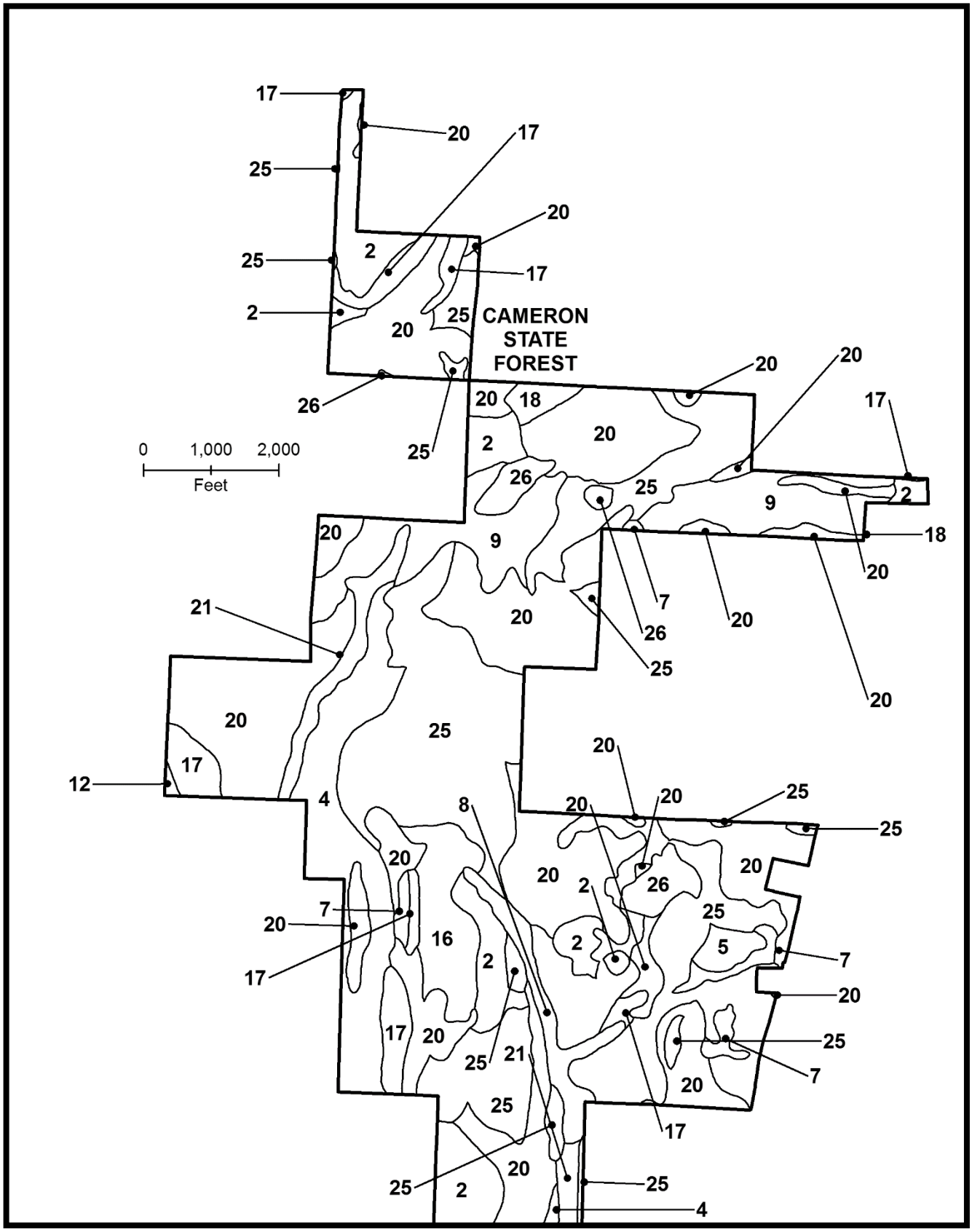
CAMERON
STATE
FOREST
0 1,000 2,000
Feet
17
20
25
2
26
18
9
21
12
4
8
16
5
7

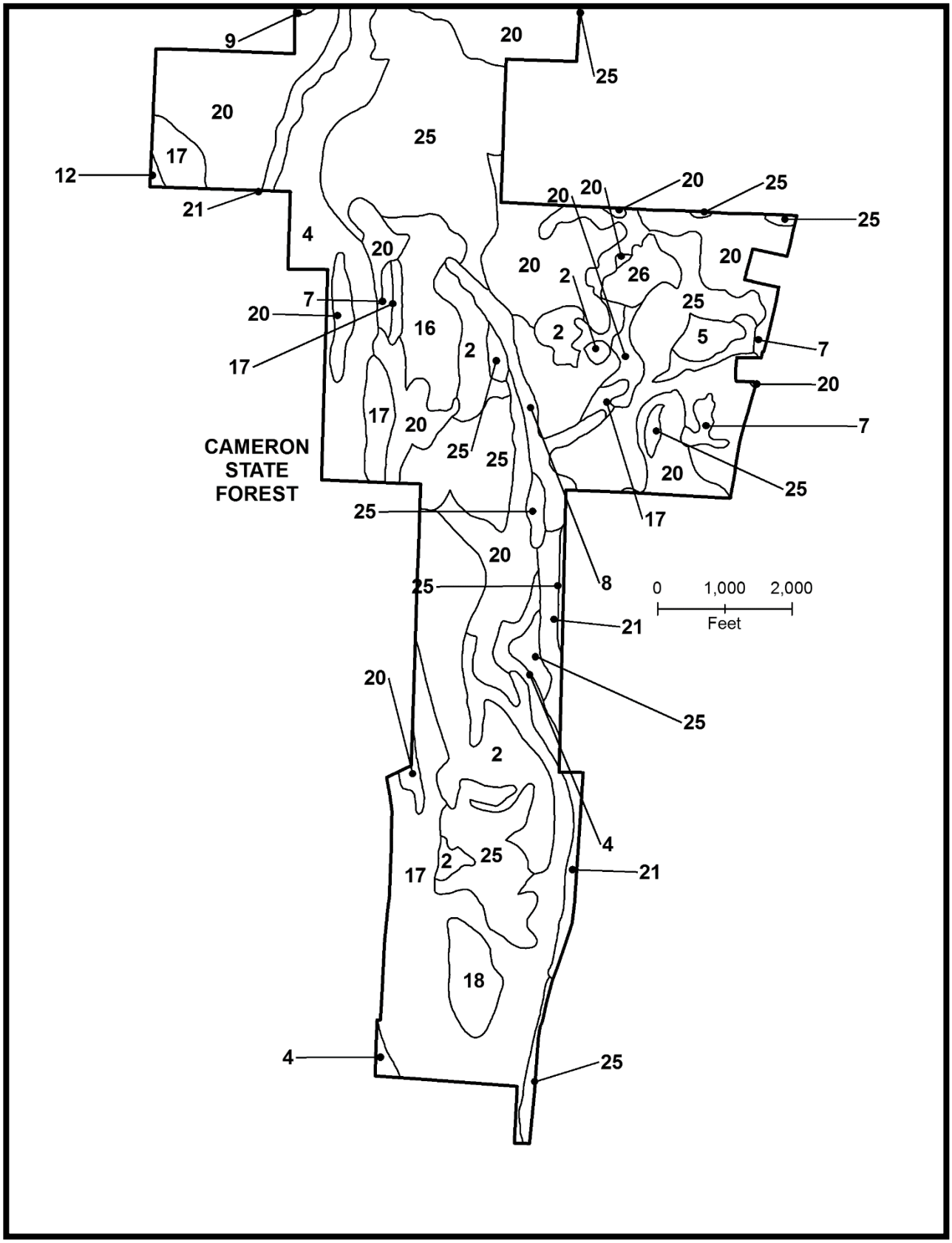
9
20
25
20
25
17
12
21
20
20
20
25
25
4
20
20
2
26
20
7
20
16
2
2
25
5
7
17
20
17
20
7
CAMERON
STATE
FOREST
25
25
20
25
25
17
20
25
8
0
1,000
2,000
Feet
21
20
25
2
4
17
2
25
21
18
4
25

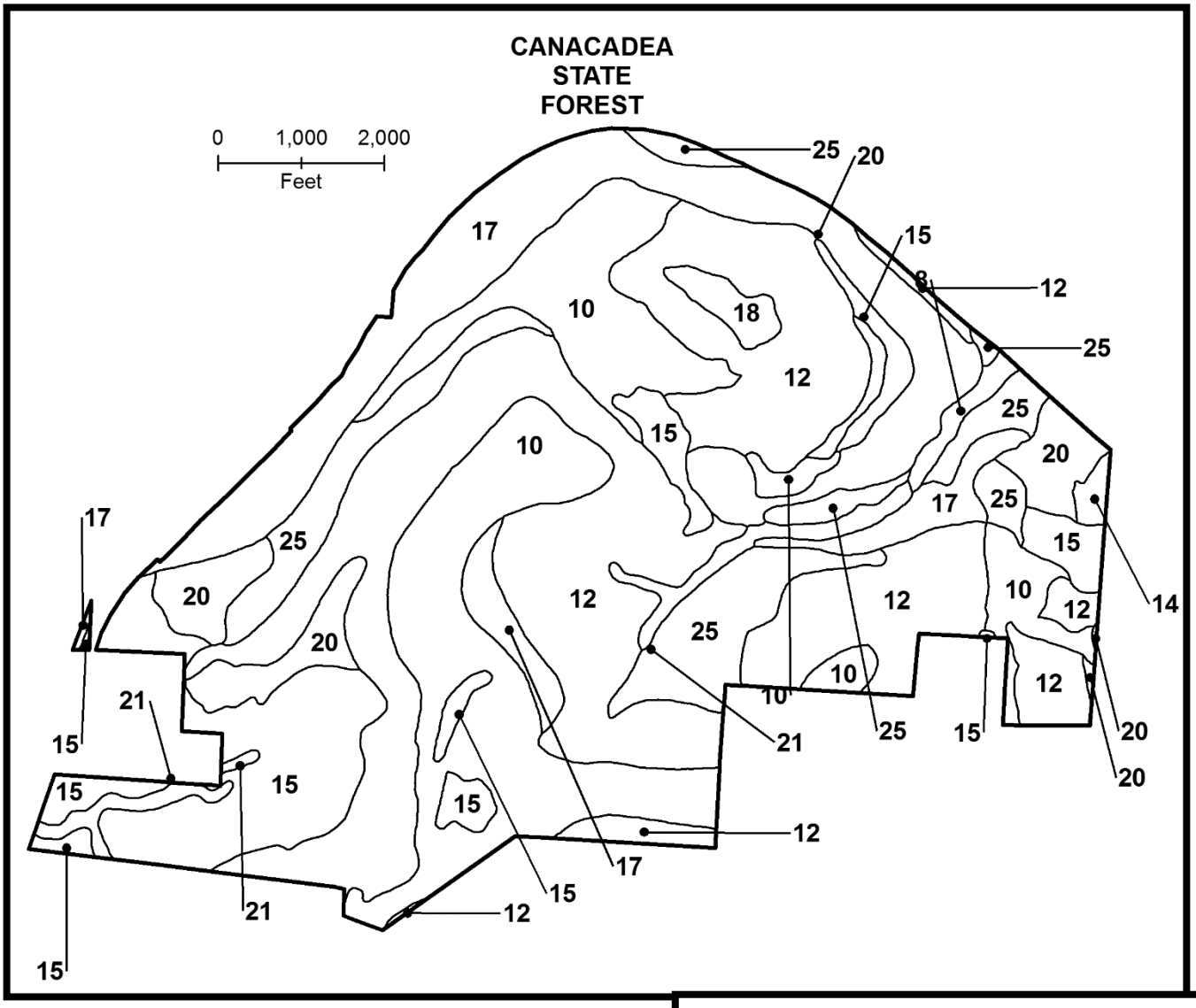
CANACADEA
STATE
FOREST
0 1,000 2,000
Feet
25
20
17
15
8
12
10
18
12
25
25
15
10
20
17
25
17
25
15
20
12
12
10
12
14
20
25
10
12
21
10
21
25
15
20
15
15
15
20
15
12
17
15
21
12
15

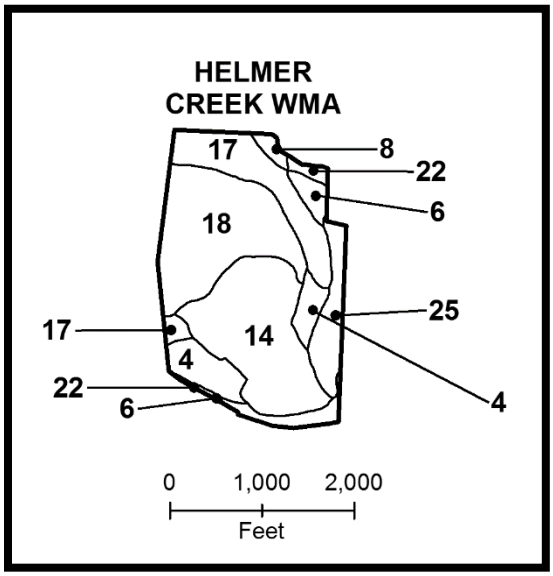
HELMER
CREEK WMA
17
8
22
6
18
25
17
14
4
22
6
4
0 1,000 2,000
Feet

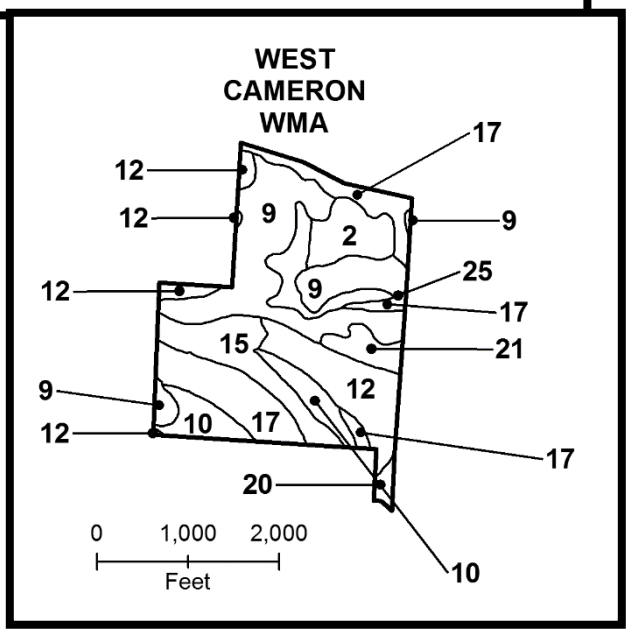
WEST
CAMERON
WMA
17
12
12
9
2
9
25
12
9
17
15
21
12
9
10
17
12
17
20
0 1,000 2,000
Feet
10

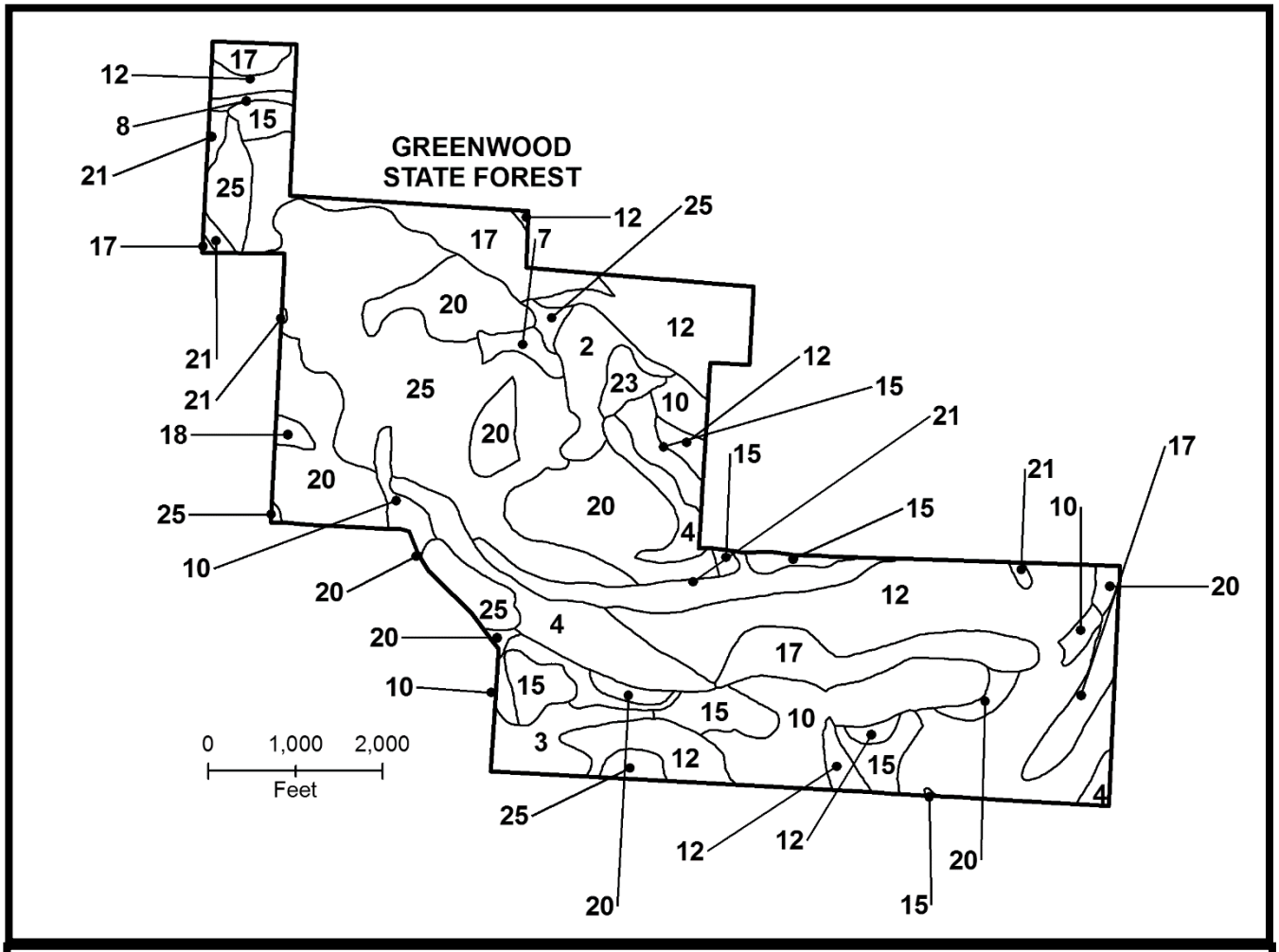
GREENWOOD
STATE FOREST
0 1,000 2,000
Feet

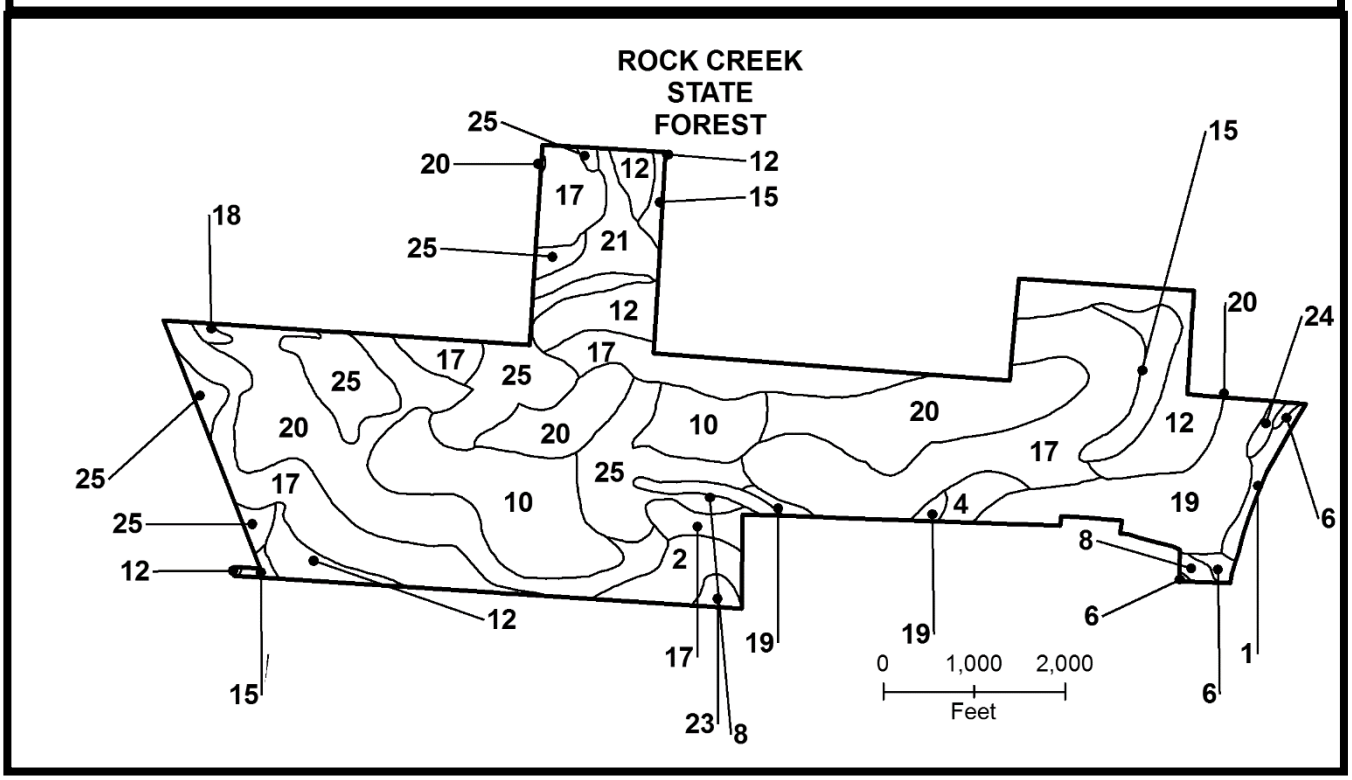
ROCK CREEK
STATE
FOREST
0 1,000 2,000
Feet

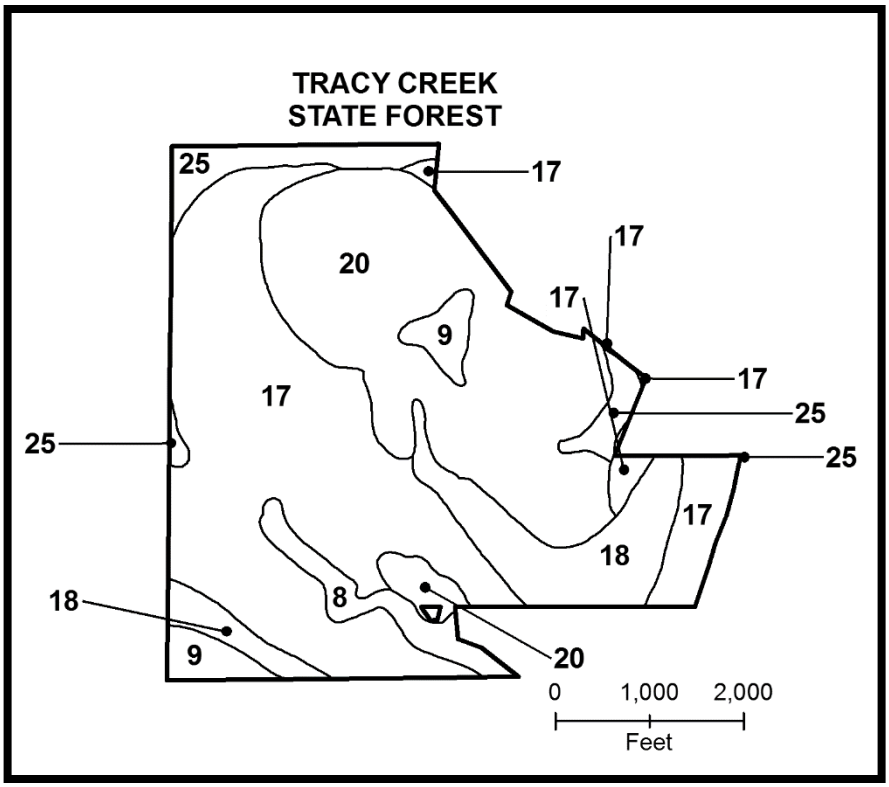
TRACY CREEK
STATE FOREST
25
17
17
20
17
9
17
17
25
25
25
17
18
18
8
9
20
0
1,000
2,000
Feet

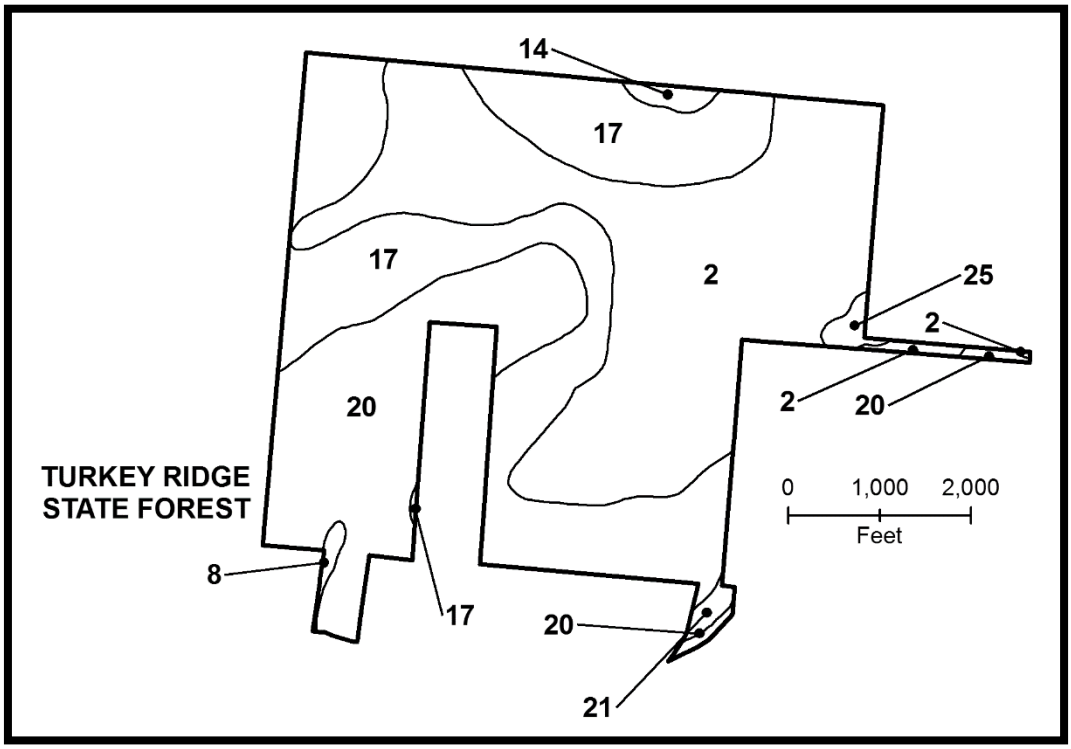
14
17
17
2
25
2
2
20
20
TURKEY RIDGE
STATE FOREST
0
1,000
2,000
Feet
8
17
20
21

For additional information contact:

NYS DEC
Forest Resource Management
7291 Coon Rd
Bath, NY 14810

607-776-2165

www.dec.ny.gov
R8.UMP@dec.ny.gov
This plan will be located at: www.dec.ny.gov/lands/42067.html