SECTION 3
EROSION CONTROL - PART 1
RUNOFF CONTROL

CONTENTS

Page

List of Tables and Figures

Scope and Discussion 3.1

Check Dam 3.2

Construction Ditch 3.4

Dewatering Sump Pit 3.7

Diversion 3.9

Earth Dike 3.14

Flow Diffuser 3.16

Flow Spreader 3.19

Grade Stabilization Structure 3.21

Grassed Waterway 3.23

Lined Waterway 3.27

Paved Flume 3.31

Perimeter Dike/Swale 3.35

Pipe Slope Drain 3.37

Rock Outlet Protection 3.39

Storm Drain Diversion 3.47

Subsurface Drain 3.48

Water Bar 3.52

Section prepared by:

Donald W. Lake Jr., PE, CPESC, CPSWQ
Former State Conservation Engineer
USDA– Natural Resources Conservation Service
Syracuse, New York

Adjunct Assistant Professor
State University of New York, College of Environmental Science and Forestry

List of Tables and Figures

Table	Title	Page
3.1	Diversion Maximum Permissible Design Velocities Table	3.10
3.2	Retardance Factors for Various Grasses and Legumes Table	3.10
3.3	Parabolic Diversion Design, Without Freeboard Tables- 1	3.12
3.4	Parabolic Diversion Design, Without Freeboard Tables - 2	3.13

Figure	Title	Page
3.1	Stone Check Dam Detail	3.3
3.2	Construction Ditch Detail	3.6
3.3	Dewatering Sump Pit Detail	3.8
3.4	Diversion Detail	3.11
3.5	Earth Dike Detail	3.15
3.6	Flow Diffuser Detail	3.18
3.7	Flow Spreader Detail	3.20
3.8	Typical Waterway Cross Sections Details	3.24
3.9	Parabolic Waterway Design Chart	3.25
3.10	Grassed Waterway Detail	3.26
3.11	Determining “n” for Riprap Lined Channel using Depth of Flow Chart	3.30
3.12	Examples of Outlet Structures	3.33
3.13	Paved Flume Detail	3.34
3.14	Perimeter Dike Swale Detail	3.36
3.15	Pipe Slope Drain Detail	3.38
3.16	Outlet Protection Design - Minimum Tailwater Condition Chart	3.42
3.17	Outlet Protection Design - Maximum Tailwater Condition Chart	3.43
3.18	Riprap Outlet Protection Detail (1)	3.44
3.19	Riprap Outlet Protection Detail (2)	3.45
3.20	Riprap Outlet Protection Detail (3)	3.46
3.21	Drain Chart - Corrugated Plastic Drain Tubing	3.51
3.22	Waterbar Detail	3.53

EROSION CONTROL - PART 1
RUNOFF CONTROL

Scope and Discussion

Water management on and above potentially eroding sites is extremely important and is the first step in controlling potential erosion on construction sites or disturbed, exposed soil areas. Large watersheds above a site may require extensive water control measures. Water flow paths must be controlled to allow safe delivery of water to an outlet at the side or bottom of a slope. Shallow ditches or diversions across the slope and above the area to be disturbed is an effective method of avoiding rills and gullies in disturbed areas and wash-out of the seed and soil. Diversions may be constructed at a point where surface runoff water is intercepted and carried away from the slope to a safe outlet.

Within the construction area, surface runoff and groundwater must be managed to protect both the site condition and offsite resources. Conveyances such as swales, waterways, slope drains, dewatering methods and flow bypass systems need to be evaluated to meet design objectives. These include both the management of clean water as well as sediment laden water. **In all cases, water management practices should take into account potential impacts to receiving waters and include stable discharge elements.** This may include armored or fabric lined conveyances, rock outlet aprons, flow dissipation, or excavated plunge pools.

On large slopes benching may be necessary for drainage and/or future maintenance access (see standard for Land Grading). Subsurface drainage is frequently included to prevent long term saturated soil conditions and sloughing.

Structural erosion control practices are generally considered as temporary or permanent depending on how they are used. Some are both. Temporary structural practices are used during construction to prevent onsite erosion and offsite migration of sediment. The length of time that temporary practices are functional varies from project to project, since the sediment control strategy may change as construction activity progresses. Permanent structural practices are used to convey surface water runoff to a safe outlet. They will remain in place and continue to function after the completion of construction and final stabilization.

Regardless of whether the practices are temporary or permanent, runoff control measures should be the first practices constructed when grading begins, and be completely functional before downslope land disturbance takes place. Earthen structures such as diversions, dikes, and swales must be stabilized before being considered functional. Only after runoff control structures are operational and sediment control measures in place, should clearing and grading on the rest of the construction site begin.

Note: Performing activities within or adjacent to wetlands, streams and waterbodies may require permits from the New York State Department of Environmental Conservation (NYSDEC) pursuant to Article 15 (Protection of Waters), Article 24 (Freshwater Wetlands) and Article 25 (Tidal Wetlands) of the Environmental Conservation Law (ECL). Project owners should contact NYSDEC's Regional Division of Environmental Permits early in the site planning process to discuss the requirements for meeting permit issuance standards. Following the New York State Standards and Specifications for Erosion and Sediment Control may not ensure compliance with the above referenced sections of the ECL.

STANDARD AND SPECIFICATIONS FOR CHECK DAM

Definition & Scope

Small barriers or dams constructed of stone, bagged sand or gravel, or other durable materials across a drainageway to reduce erosion in a drainage channel by reducing the velocity of flow in the channel.

Conditions Where Practice Applies

This practice is used as a **temporary** and, in some cases, a **permanent** measure to limit erosion by reducing velocities in open channels that are degrading or subject to erosion or where permanent stabilization is impractical due to short period of usefulness and time constraints of construction.

Design Criteria

Drainage Area: Maximum drainage area above the check dam shall not exceed two (2) acres.

Height: Not greater than 2 feet. Center shall be maintained 9 inches lower than abutments at natural ground elevation.

Side Slopes: Shall be 2:1 or flatter.

Spacing: The check dams shall be spaced as necessary in the channel so that the crest of the downstream dam is at the elevation of the toe of the upstream dam. This spacing is equal to the height of the check dam divided by the channel slope.

Therefore:

$$S = \frac{h}{s}$$

Where: S = spacing interval (ft.)
h = height of check dam (ft.)
s = channel slope (ft./ft.)

Example:

For a channel with a 4% slope and 2 ft. high stone check dams, they are spaced as follows:

$$S = \frac{2\ \text{ft}}{0.04\ \frac{\text{ft}}{\text{ft}}} = 50\ \text{ft}$$

For stone check dams: Use a well graded stone matrix 2 to 9 inches in size (NYS – DOT Light Stone Fill meets these requirements).

The overflow of the check dams will be stabilized to resist erosion that might be caused by the check dam. See Figure 3.1 on page 3.3 for details.

Check dams should be anchored in the channel by a cutoff trench 1.5 ft. wide and 0.5 ft. deep and lined with filter fabric to prevent soil migration.

For filter sock or fiber roll check dams: The check dams will be anchored by staking the dam to the earth contact surface. The dam will extend to the top of the bank. The check dam will have a splash apron of NYS DOT #2 crushed stone extending a minimum 3 feet downstream from the dam and 1 foot up the sides of the channel. The compost and materials for a filter sock check dam shall meet the requirements shown in the standard for Compost Filter Sock on page 5.7.

Maintenance

The check dams should be inspected after each runoff event. Correct all damage immediately. If significant erosion has occurred between structures, a liner of stone or other suitable material should be installed in that portion of the channel or additional check dams added.

Remove sediment accumulated behind the dam as needed to allow channel to drain through the stone check dam and prevent large flows from carrying sediment over the dam.

Figure 3.1
Stone Check Dam Detail

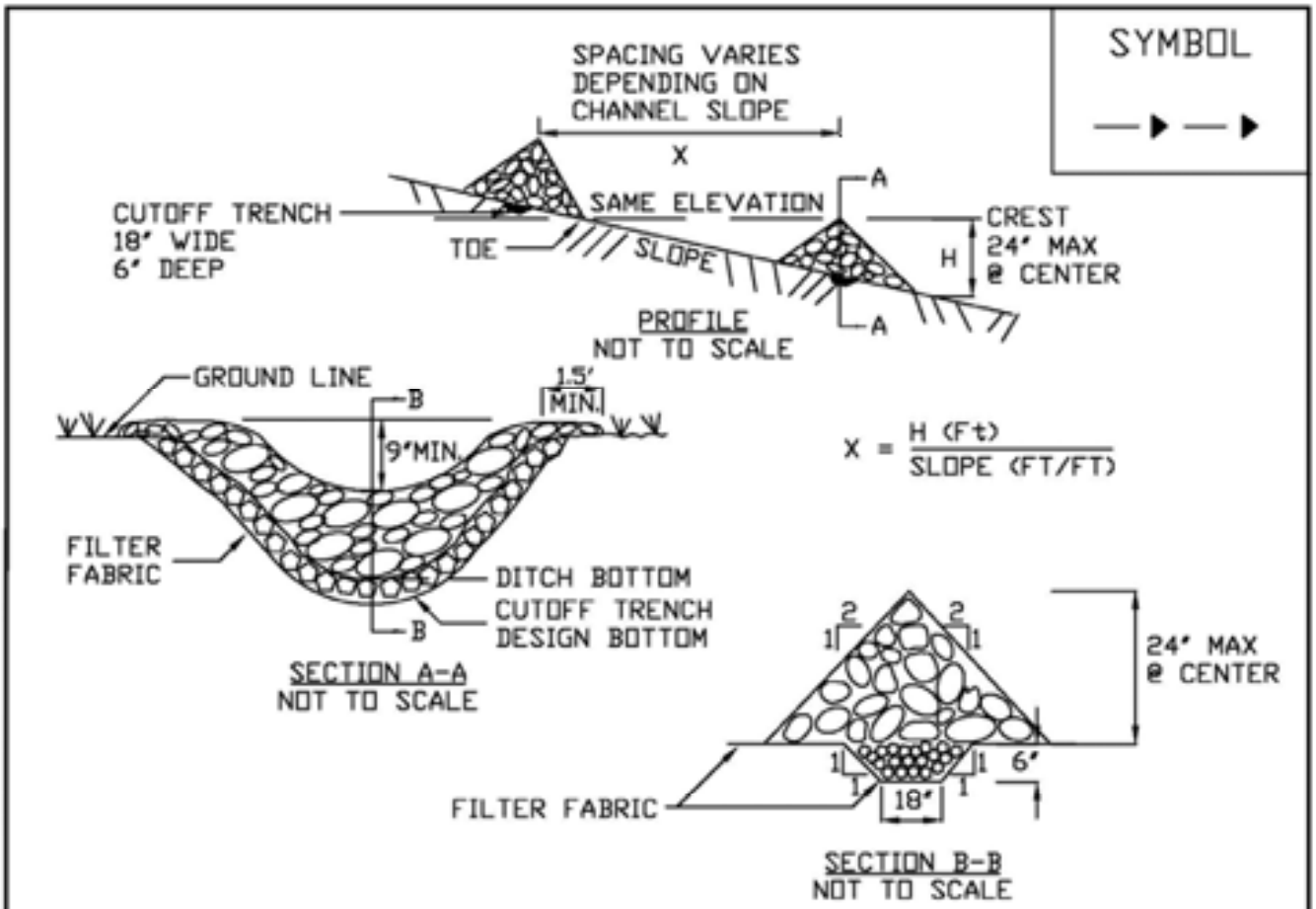

CONSTRUCTION SPECIFICATIONS

1. STONE WILL BE PLACED ON A FILTER FABRIC FOUNDATION TO THE LINES, GRADES AND LOCATIONS SHOWN IN THE PLAN.
2. SET SPACING OF CHECK DAMS TO ASSUME THAT THE ELEVATIONS OF THE CREST OF THE DOWNSTREAM DAM IS AT THE SAME ELEVATION OF THE TOE OF THE UPSTREAM DAM.
3. EXTEND THE STONE A MINIMUM OF 1.5 FEET BEYOND THE DITCH BANKS TO PREVENT CUTTING AROUND THE DAM.
4. PROTECT THE CHANNEL DOWNSTREAM OF THE LOWEST CHECK DAM FROM SCOUR AND EROSION WITH STONE OR LINER AS APPROPRIATE.
5. ENSURE THAT CHANNEL APPURTENANCES SUCH AS CULVERT ENTRANCES BELOW CHECK DAMS ARE NOT SUBJECT TO DAMAGE OR BLOCKAGE FROM DISPLACED STONE.

MAXIMUM DRAINAGE AREA 2 ACRES.

ADAPTED FROM DETAILS PROVIDED BY: USDA - NRCS, NEW YORK STATE DEPARTMENT OF TRANSPORTATION, NEW YORK STATE DEPARTMENT OF ENVIRONMENTAL CONSERVATION, NEW YORK STATE SOIL & WATER CONSERVATION COMMITTEE	STONE CHECK DAM

STANDARD AND SPECIFICATIONS FOR CONSTRUCTION DITCH

Definition & Scope

A **temporary** excavated drainage way to intercept sediment laden water and divert it to a sediment trapping device or to prevent runoff from entering disturbed areas by intercepting and diverting it to a stabilized outlet.

Conditions Where Practice Applies

Construction ditches are constructed:

1. to divert flows from entering a disturbed area.
2. intermittently across disturbed areas to shorten overland flow distances.
3. to direct sediment laden water along the base of slopes to a trapping device.
4. to transport offsite flows across disturbed areas such as rights-of-way.

Ditches collecting runoff from disturbed areas shall remain in place until the disturbed areas are permanently stabilized.

Design Criteria

See Figure 3.2 on page 3.6 for details.

General

	Ditch A	Ditch B
Drainage Area	<5 Ac	5-10 Ac
Bottom Width of Flow Channel	4 ft.	6 ft.
Depth of Flow Channel	1 ft.	1 ft.
Side Slopes	2:1 or flatter	2:1 or flatter
Grade	0.5% Min. 10% Max.	0.5% Min. 10% Max.

For drainage areas larger than 10 acres, refer to the Standard and Specification for Grassed Waterways on page 3.23 and 3.24.

Stabilization

Stabilization of the ditch shall be completed within 2 days of installation in accordance with the appropriate standard and specifications for vegetative stabilization or stabilization with mulch as determined by the time of year. The flow channel shall be stabilized as per the following criteria:

The seeding for vegetative stabilization shall be in accordance with the standard on Page 4.78. The seeded area will be mulched in accordance with the standard on Page 4.39.

Type of Treatment	Channel Grade[1]	Flow Channel	
		A (<5 Ac.)	B (5-10 Ac.)
1	0.5-3.0%	Seed & Straw Mulch	Seed & Straw Mulch
2	3.1-5.0%	Seed & Straw Mulch	Seed and cover with RECP[2], Sod, or lined with plastic or 2” stone
3	5.1-8.0%	Seed and cover with RECP[2], Sod, or line with plastic or 2 in. stone	Line with 4-8 in. rip-rap or, geotextile
4	8.1-10%	Line with 4-8 in. rip-rap or geotextile	Site Specific Design

1 In highly erodible soils, as defined by the local approving agency, refer to the next higher slope grade for type of stabilization.
2 Rolled Erosion Control Product.

Outlet

Ditch shall have an outlet that functions with a minimum of erosion, and dissipates runoff velocity prior to discharge off the site.

Runoff shall be conveyed to a sediment trapping device such as a sediment trap or sediment basin until the drainage area above the ditch is adequately stabilized.

The on-site location may need to be adusted to meet field conditions in order to utilize the most suitable outlet condition.

If a ditch is used to divert clean water flows from entering a disturbed area, a sediment trapping device may not be needed.

Figure 3.2
Construction Ditch Detail

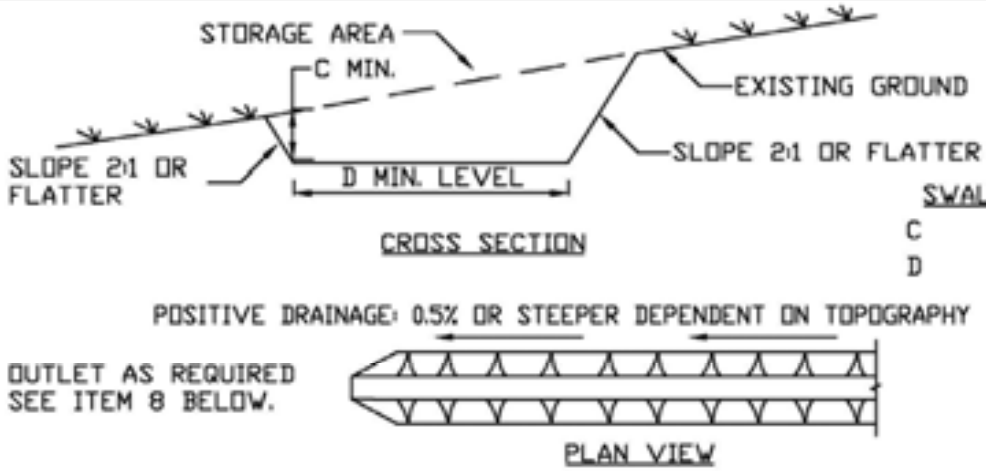

CONSTRUCTION SPECIFICATIONS

1. ALL CONSTRUCTION DITCHES SHALL HAVE UNINTERUPTED POSITIVE GRADE TO AN OUTLET.
2. DIVERTED RUNOFF FROM A DISTURBED AREA SHALL BE CONVEYED TO A SEDIMENT TRAPPING DEVICE.
3. DIVERTED RUNOFF FROM AN UNDISTURBED AREA SHALL OUTLET DIRECTLY INTO AN UNDISTURBED STABILIZED AREA AT NON-EROSIVE VELOCITY.
4. ALL TREES, BRUSH, STUMPS, OBSTRUCTIONS, AND OTHER OBJECTIONABLE MATERIAL SHALL BE REMOVED AND DISPOSED OF SO AS NOT TO INTERFERE WITH THE PROPER FUNCTIONING OF THE SWALE.
5. THE DITCH SHALL BE EXCAVATED OR SHAPED TO LINE, GRADE, AND CROSS SECTION AS REQUIRED TO MEET THE CRITERIA SPECIFIED HEREIN AND BE FREE OF BANK PROJECTIONS OR OTHER IRREGULARITIES WHICH WILL IMPEDE NORMAL FLOW.
6. FILLS SHALL BE COMPACTED BY EARTH MOVING EQUIPMENT.
7. ALL EARTH REMOVED AND NOT NEEDED FOR CONSTRUCTION SHALL BE PLACED SO THAT IT WILL NOT INTERFERE WITH THE FUNCTIONING OF THE DITCH.
8. STABILIZATION SHALL BE AS PER THE FLOW CHANNEL STABILIZATION CHART BELOW:

TYPE OF TREATMENT	CHANNEL GRADE	A(5 AC. OR LESS)	B(5 AC -10AC)
1	0.5-3.0%	SEED AND STRAW MULCH	SEED AND STRAW MULCH
2	3.1-5.0%	SEED AND STRAW MULCH	SEED AND COVER USING RECP
3	5.1-8.0%	SEED AND COVER WITH RECP	LINED WITH 4-8" RIP-RAP OR GEOTEXTILE
4	8.1-10.%	LINED WITH 4-8" RIP-RAP OR GEOTEXTILE	SITE SPECIFIC DESIGN

9. PERIODIC INSPECTION AND REQUIRED MAINTENANCE MUST BE PROVIDED AFTER EACH RAIN EVENT.

ADAPTED FROM DETAILS PROVIDED BY: USDA - NRCS, NEW YORK STATE DEPARTMENT OF TRANSPORTATION, NEW YORK STATE DEPARTMENT OF ENVIRONMENTAL CONSERVATION, NEW YORK STATE SOIL & WATER CONSERVATION COMMITTEE

CONSTRUCTION DITCH

STANDARD AND SPECIFICATIONS FOR DEWATERING SUMP PIT

Discharge of turbid water pumped from the standpipe should be to a sediment trap, sediment basin, filter bag or stabilized area, such as a filter strip. If water from the sump pit will be pumped directly to a storm drain system, filter cloth with an equivalent sieve size between 40-80 should be wrapped around the standpipe to ensure clean water discharge. It is recommended that ¼ to ½ inch hardware cloth be wrapped around and secured to the standpipe prior to attaching the filter cloth. This will increase the rate of water seepage into the standpipe.

Definition & Scope

A **temporary** pit which is constructed using pipe and stone for pumping excessive water from excavations to a suitable discharge area.

Conditions Where Practice Applies

Sump pits are constructed when water collects during the excavation phase of construction. This practice is particularly useful in urban areas during excavation for building foundations. It may also be necessary during construction activities that encounter high ground water tables in floodplain locations.

Design Criteria

The number of sump pits and their locations shall be determined by the contractor/engineer. A design is not required, but construction should conform to the general criteria outlined on Figure 3.3 on page 3.8.

A perforated vertical standpipe is placed in the center of the pit and surrounded with a stone screening material to collect filtered water. Water is then pumped from the center of the pipe to a suitable discharge area.

Figure 3.3
Dewatering Sump Pit Detail

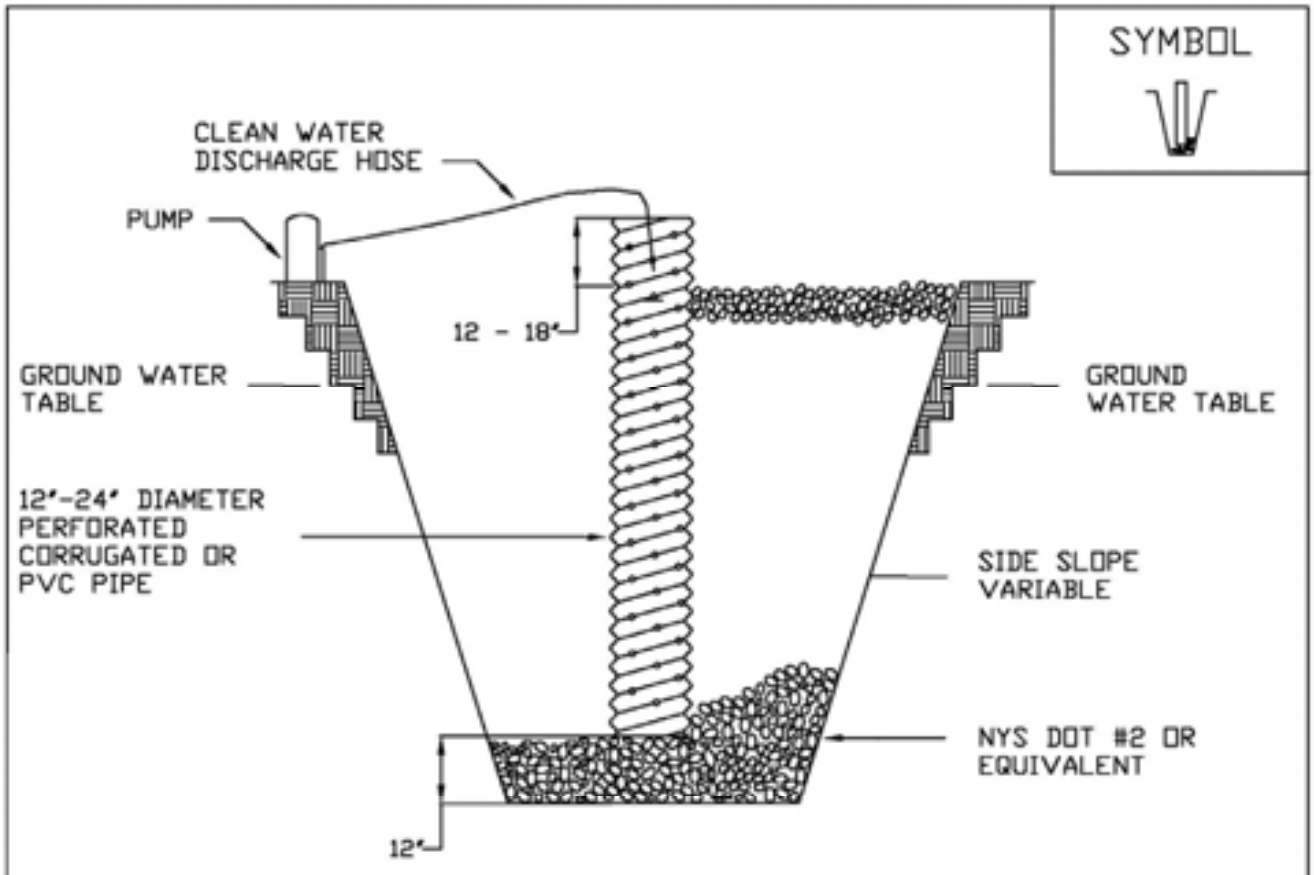

CONSTRUCTION SPECIFICATIONS

1. PIT DIMENSIONS ARE VARIABLE.
2. THE STANDPIPE SHOULD BE CONSTRUCTED BY PERFORATING A 12-24" DIAMETER CORRUGATED OR PVC PIPE.
3. A BASE OF NYS DOT #2 OR EQUIVALENT AGGREGATE SHOULD BE PLACED IN THE PIT TO A DEPTH OF 12". AFTER INSTALLING THE STANDPIPE, THE PIT SURROUNDING THE STANDPIPE SHOULD BE BACKFILLED WITH NYS DOT #2 OR EQUIVALENT AGGREGATE.
4. THE STANDPIPE SHOULD EXTEND 12-18" ABOVE THE LIP OF THE PIT.
5. IF DISCHARGE WILL BE PUMPED DIRECTLY TO A STORM DRAINAGE SYSTEM, THE STANDPIPE SHOULD BE WRAPPED WITH FILTERCLOTH BEFORE INSTALLATION. IT IS RECOMMENDED THAT 1/4"-1/2" HARDWARE CLOTH MAY BE PLACED AROUND THE STANDPIPE, PRIOR TO ATTACHING THE FILTERCLOTH.

ADAPTED FROM DETAILS PROVIDED BY: USDA - NRCS, NEW YORK STATE DEPARTMENT OF TRANSPORTATION, NEW YORK STATE DEPARTMENT OF ENVIRONMENTAL CONSERVATION, NEW YORK STATE SOIL & WATER CONSERVATION COMMITTEE	DEWATERING SUMP PIT

STANDARD AND SPECIFICATIONS FOR DIVERSION

Definition & Scope

A drainage way of parabolic or trapezoidal cross-section with a supporting ridge on the lower side that is constructed across the slope to intercept and convey runoff to stable outlets at non-erosive velocities.

Conditions Where Practice Applies

Diversions are used where:

1. Runoff from higher areas has potential for damaging properties, causing erosion, or interfering with, or preventing the establishment of, vegetation on lower areas.
2. Surface and/or shallow subsurface flow is damaging sloping upland.
3. The length of slopes needs to be reduced so that soil loss will be kept to a minimum.

Diversions are only applicable below stabilized or protected areas. Avoid establishment on slopes greater than fifteen percent. Diversions should be used with caution on soils subject to slippage. Construction of diversions shall be in compliance with state and local drainage and water laws.

Design Criteria

Location

Diversion location shall be determined by considering outlet conditions, topography, land use, soil type, length of slope, seep planes (when seepage is a problem), and the development layout.

Capacity

Peak rates of runoff values used in determining the capacity requirements shall be calculated using the most current hydrologic data from the Northeast Regional Climate Center in an appropriate model.

The constructed diversion shall have capacity to carry, as a minimum, the peak discharge from a 10 year frequency rainfall event with freeboard of not less than 0.3 feet.

Diversions designed to protect homes, schools, industrial buildings, roads, parking lots, and comparable high-risk areas, and those designed to function in connection with other structures, shall have sufficient capacity to carry peak runoff expected from a storm frequency consistent with the hazard involved.

Cross Section

The diversion channel shall be parabolic or trapezoidal in shape. Parabolic Diversion design charts are provided in Tables 3.2, 3.3 and 3.4 on pages 3.10, 3.12 and 3.13**.** The diversion shall be designed to have stable side slopes. The side slopes shall not be steeper than 2:1 and shall be flat enough to ensure ease of maintenance of the diversion and its protective vegetative cover.

The ridge shall have a minimum width of four feet at the design water elevation; a minimum of 0.3 feet freeboard and a reasonable settlement factor shall be provided.

Velocity and Grade

The permissible velocity for the specified method of stabilization will determine the maximum grade. Maximum permissible velocities of flow for the stated conditions of stabilization shall be as shown in Table 3.1 on page 3.10 of this standard.

Diversions are not usually applicable below high sediment producing areas unless land treatment practices or structural measures, designed to prevent damaging accumulations of sediment in the channels, are installed with, or before, the diversions.

Outlets

Each diversion must have an adequate outlet. The outlet may be a grassed waterway, vegetated or paved area, grade stabilization structure, flow spreader, flow diffuser, stable watercourse, or subsurface drain outlet. In all cases, the outlet must convey runoff to a point where outflow will not cause damage. Vegetated outlets shall be installed before diversion construction, if needed, to ensure establishment of

vegetative cover in the outlet channel.

The design elevation of the water surface in the diversion shall not be lower than the design elevation of the water surface in the outlet at their junction when both are operating at design flow.

Stabilization

Vegetated diversions shall be stabilized in accordance with the following tables.

Table 3.1
Diversion Maximum Permissible Design Velocities Table

Soil Texture	Retardance and Cover	Permissible Velocity (ft / second) for Selected Channel Vegetation
Sand, Silt, Sandy loam, silty loam, loamy sand (ML, SM, SP, SW)	C-Kentucky 31 tall fescue and Kentucky bluegrass	3.0
	D-Annuals[1] Small grain (rye, oats, barley, millet) Ryegrass	2.5
Silty clay loam, Sandy clay loam (ML-CL, SC)	C-Kentucky 31 tall fescue and Kentucky bluegrass	4.0
	D-Annuals[1] Small grain (rye, oats, barley, millet) Ryegrass	3.5
Clay (CL)	C-Kentucky 31 tall fescue and Kentucky bluegrass	5.0
	D-Annuals[1] Small grain (rye, oats, barley, millet) Ryegrass	4.0
[1] Annuals—Use only as temporary protection until permanent vegetation is established.		

Table 3.2 - Retardance Factors for Various Grasses and Legumes Table

Retardance	Cover	Condition
A	Reed canarygrass	Excellent stand, tall (average 36 inches)
B	Smooth bromegrass	Good stand, mowed (average 12 to 15 inches)
	Tall fescue	Good stand, unmowed (average 18 inches)
	Grass-legume mixture—Timothy, smooth bromegrass, or Orchard grass with birdsfoot trefoil	Good stand, uncut (average 20 inches)
	Reed canarygrass	Good stand, mowed (average 12 to 15 inches)
	Tall fescue, with birdsfoot trefoil or ladino clover	Good stand, uncut (average 18 inches)
C	Redtop	Good stand, headed (15 to 20 inches)
	Grass-legume mixture—summer (Orchard grass, redtop, Annual ryegrass, and ladino or white clover)	Good stand, uncut (6 to 8 inches)
	Kentucky bluegrass	Good stand, headed (6 to 12 inches)
D	Red fescue	Good stand, headed (12 to 18 inches)
	Grass-legume mixture—fall, spring (Orchard grass, redtop, Annual ryegrass, and white or ladino clover)	Good stand, uncut (4 to 5 inches)

Figure 3.4
Diversion Detail

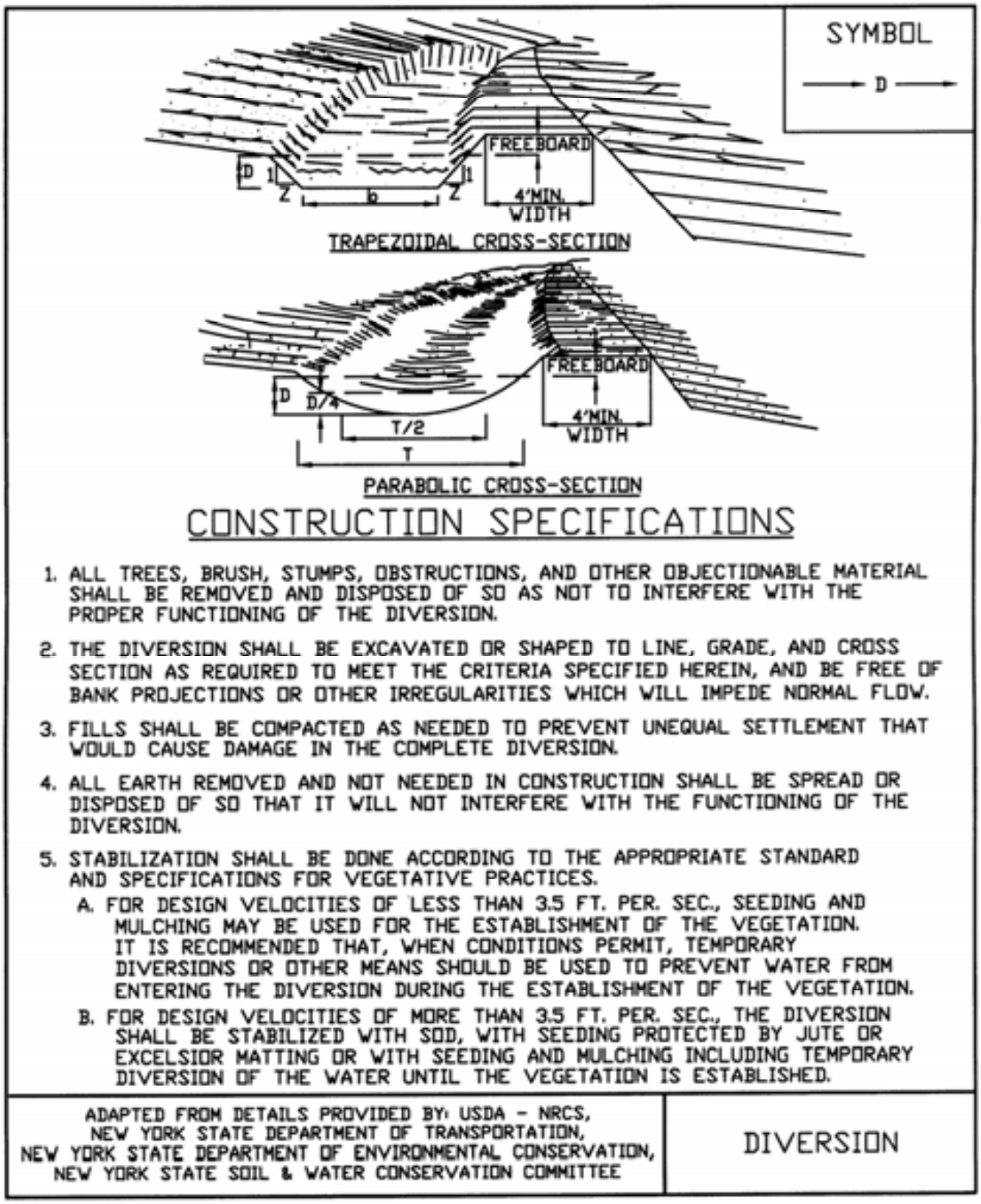

Table 3.3
Parabolic Diversion Design, Without Freeboard Tables - 1 (USDA– NRCS)

PARABOLIC DIVERSION DESIGN, WITHOUT FREEBOARD

RETARDANCE - D & C
GRADE, % - 0.50

V_1 Based on Permissible Velocity of the Soil With Retardance "D"
Top Width, Depth & V_2 Based on Retardance "C"

Q	V_1 = 2.0			V_1 = 2.5			V_1 = 3.0			V_1 = 3.5			V_1 = 4.0			V_1 = 4.5			V_1 = 5.0			V_1 = 5.5			V_1 = 6.0		
cfs	T	D	V_2	T	D	V_2	T	D	V_2	T	D	V_2	T	D	V_2	T	D	V_2	T	D	V_2	T	D	V_2	T	D	V_2
15	9	1.6	1.6																								
20	11	1.6	1.7																								
25	14	1.6	1.7	9	1.9	2.1																					
30	17	1.6	1.7	11	1.9	2.2	8	2.2	2.5																		
35	20	1.6	1.7	12	1.9	2.3	9	2.1	2.6																		
40	22	1.6	1.7	14	1.8	2.3	11	2.1	2.7																		
45	25	1.5	1.7	16	1.8	2.3	12	2.0	2.8																		
50	28	1.5	1.7	18	1.8	2.4	13	2.0	2.8	10	2.4	3.2															
55	31	1.5	1.7	19	1.8	2.4	15	2.0	2.8	11	2.4	3.3															
60	33	1.5	1.7	21	1.8	2.4	16	2.0	2.8	11	2.4	3.3															
65	36	1.5	1.8	23	1.8	2.4	17	2.0	2.9	12	2.4	3.3															
70	39	1.5	1.7	24	1.8	2.4	18	2.0	2.9	13	2.3	3.4															
75	42	1.5	1.8	26	1.8	2.4	19	2.0	2.9	14	2.3	3.4	11	2.7	3.7												
80	44	1.5	1.8	28	1.8	2.4	21	2.0	2.9	15	2.3	3.4	12	2.7	3.8												
90	50	1.5	1.8	31	1.8	2.4	24	2.0	2.9	17	2.3	3.4	13	2.7	3.8												
100	55	1.5	1.8	35	1.8	2.4	26	2.0	2.9	19	2.3	3.5	15	2.6	3.9	12	3.0	4.1									

PARABOLIC DIVERSION DESIGN, WITHOUT FREEBOARD

RETARDANCE - D & C
GRADE, % - 1.0

V_1 based on Permissible Velocity of the Soil With Retardance "D"
Top Width, Depth & V_2 Based on Retardance "C"

Q	V_1 = 2.0			V_1 = 2.5			V_1 = 3.0			V_1 = 3.5			V_1 = 4.0			V_1 = 4.5			V_1 = 5.0			V_1 = 5.5			V_1 = 6.0		
cfs	T	D	V_2	T	D	V_2	T	D	V_2	T	D	V_2	T	D	V_2	T	D	V_2	T	D	V_2	T	D	V_2	T	D	V_2
15	13	1.1	1.5	8	1.3	2.0																					
20	18	1.1	1.5	11	1.3	2.1	8	1.5	2.6																		
25	22	1.1	1.5	14	1.3	2.1	9	1.5	2.6	8	1.6	3.0															
30	27	1.1	1.5	17	1.3	2.1	11	1.5	2.7	9	1.6	3.0															
35	31	1.1	1.5	19	1.3	2.2	13	1.5	2.8	11	1.6	3.1	8	1.8	3.6												
40	35	1.1	1.5	22	1.3	2.1	15	1.4	2.8	12	1.6	3.1	9	1.8	3.7												
45	40	1.1	1.5	25	1.3	2.2	17	1.5	2.8	13	1.6	3.2	10	1.8	3.7												
50	44	1.1	1.5	28	1.3	2.2	19	1.4	2.8	15	1.6	3.2	11	1.8	3.7	9	2.0	4.2									
55	46	1.1	1.5	30	1.3	2.2	20	1.4	2.8	16	1.5	3.3	12	1.8	3.8	10	2.0	4.3									
60	53	1.1	1.5	33	1.3	2.2	22	1.4	2.8	18	1.5	3.3	14	1.7	3.8	10	2.0	4.3									
65	57	1.1	1.5	36	1.3	2.2	24	1.4	2.8	19	1.5	3.3	15	1.7	3.8	11	2.0	4.3	9	2.2	4.7						
70	61	1.1	1.5	38	1.3	2.2	26	1.4	2.8	21	1.5	3.3	16	1.7	3.9	12	2.0	4.4	10	2.2	4.7						
75	66	1.1	1.5	41	1.3	2.2	28	1.4	2.9	22	1.5	3.3	17	1.7	3.9	13	2.0	4.5	11	2.2	4.7						
80	70	1.1	1.5	44	1.3	2.2	29	1.4	2.9	24	1.5	3.3	18	1.7	3.9	14	2.0	4.4	11	2.2	4.9						
90	79	1.1	1.5	49	1.3	2.2	33	1.4	2.9	27	1.5	3.3	20	1.7	3.9	15	1.9	4.5	13	2.2	4.9	11	2.4	5.2			
100	87	1.1	1.5	55	1.3	2.2	37	1.4	2.9	29	1.5	3.3	22	1.7	3.9	17	1.9	4.5	14	2.2	4.9	12	2.4	5.3			

Table 3.4
Parabolic Diversion Design, Without Freeboard Tables - 2 (USDA– NRCS)

PARABOLIC DIVERSION DESIGN, WITHOUT FREEBOARD

RETARDANCE - D & C
GRADE, % - 1.5

V_1 Based on Permissible Velocity of the Soil With Retardance "D"
Top Width, Depth & V_2 Based on Retardance "C"

Q	V_1 = 2.0			V_1 = 2.5			V_1 = 3.0			V_1 = 3.5			V_1 = 4.0			V_1 = 4.5			V_1 = 5.0			V_1 = 5.5			V_1 = 6.0		
cfs	T	D	V_2	T	D	V_2	T	D	V_2	T	D	V_2	T	D	V_2	T	D	V_2	T	D	V_2	T	D	V_2	T	D	V_2
15	17	0.9	1.4	11	1.1	1.9	8	1.2	2.4																		
20	23	0.9	1.4	15	1.0	1.9	10	1.2	2.5	7	1.4	3.0	6	1.5	3.4												
25	28	0.9	1.4	19	1.0	1.9	12	1.2	2.6	8	1.4	3.2	7	1.5	3.6												
30	34	0.9	1.4	22	1.0	1.9	15	1.2	2.6	10	1.3	3.2	8	1.5	3.6	7	1.6	4.0									
35	40	0.9	1.4	26	1.0	2.0	17	1.1	2.6	12	1.3	3.3	10	1.4	3.7	8	1.6	4.1									
40	45	0.9	1.4	30	1.0	1.9	20	1.2	2.6	14	1.3	3.3	11	1.4	3.7	9	1.6	4.2	7	1.8	4.6						
45	51	0.9	1.4	33	1.0	2.0	22	1.1	2.6	15	1.3	3.4	12	1.4	3.8	10	1.5	4.3	8	1.8	4.6						
50	56	0.9	1.4	37	1.0	2.0	25	1.1	2.7	17	1.3	3.4	14	1.4	3.9	11	1.5	4.3	9	1.8	4.8						
55	62	0.9	1.5	41	1.0	2.0	27	1.1	2.6	19	1.3	3.4	15	1.4	3.9	12	1.5	4.3	10	1.7	4.9	8	1.9	5.1			
60	67	0.9	1.5	44	1.0	2.0	30	1.1	2.7	20	1.3	3.4	16	1.4	3.9	14	1.5	4.4	11	1.7	4.9	9	1.9	5.2			
65	73	0.9	1.5	48	1.0	2.0	32	1.1	2.7	22	1.3	3.4	18	1.4	3.9	15	1.5	4.4	11	1.7	5.0	10	1.9	5.3			
70	78	0.9	1.5	51	1.0	2.0	34	1.1	2.7	24	1.3	3.4	19	1.4	3.9	16	1.5	4.4	12	1.7	4.9	10	1.9	5.4	9	2.1	5.6
75	83	0.9	1.5	55	1.0	2.0	37	1.1	2.7	25	1.3	3.4	21	1.4	3.9	17	1.5	4.4	13	1.7	5.0	11	1.9	5.4	9	2.1	5.6
80	89	0.9	1.5	59	1.0	2.0	39	1.1	2.7	27	1.3	3.4	22	1.4	3.9	18	1.5	4.4	14	1.7	5.0	12	1.9	5.5	10	2.1	5.8
90	100	0.9	1.5	66	1.0	2.0	44	1.1	2.7	30	1.3	3.5	25	1.4	3.9	20	1.5	4.4	16	1.7	5.0	13	1.9	5.4	11	2.0	5.9
100				73	1.0	2.0	49	1.1	2.7	33	1.3	3.5	27	1.4	3.9	22	1.5	4.5	17	1.7	5.1	15	1.9	5.5	12	2.0	6.0

PARABOLIC DIVERSION DESIGN, WITHOUT FREEBOARD

RETARDANCE - D & C
GRADE, % - 2.0

V_1 Based on Permissible Velocity of the Soil With Retardance "D"
Top Width, Depth & V_2 Based on Retardance "C"

Q	V_1 = 2.0			V_1 = 2.5			V_1 = 3.0			V_1 = 3.5			V_1 = 4.0			V_1 = 4.5			V_1 = 5.0			V_1 = 5.5			V_1 = 6.0		
cfs	T	D	V_2	T	D	V_2	T	D	V_2	T	D	V_2	T	D	V_2	T	D	V_2	T	D	V_2	T	D	V_2	T	D	V_2
15	21	0.8	1.3	13	0.9	1.9	9	1.0	2.4	7	1.2	2.9															
20	28	0.8	1.3	17	0.9	1.9	12	1.0	2.4	9	1.1	3.0	7	1.3	3.5	5	1.4	3.8									
25	35	0.8	1.3	21	0.9	1.9	15	1.0	2.4	11	1.1	3.0	8	1.3	3.7	7	1.4	4.0									
30	41	0.8	1.3	26	0.9	1.9	18	1.0	2.5	13	1.1	3.0	10	1.2	3.7	8	1.3	4.2	7	1.5	4.5						
35	48	0.8	1.4	30	0.9	1.9	22	1.0	2.4	15	1.1	3.1	11	1.2	3.8	9	1.3	4.2	8	1.5	4.7						
40	55	0.8	1.3	34	0.9	1.9	25	1.0	2.5	18	1.1	3.1	13	1.2	3.8	11	1.3	4.3	9	1.5	4.7	7	1.7	5.0			
45	62	0.8	1.4	38	0.9	1.9	28	1.0	2.5	20	1.1	3.1	14	1.2	3.8	12	1.3	4.3	10	1.4	4.8	8	1.6	5.2			
50	68	0.8	1.4	42	0.9	1.9	31	1.0	2.5	22	1.1	3.1	16	1.2	3.9	13	1.3	4.3	11	1.4	4.8	9	1.6	5.3	8	1.7	5.6
55	75	0.8	1.4	46	0.9	1.9	34	1.0	2.5	24	1.1	3.1	17	1.2	3.8	14	1.3	4.3	12	1.4	4.9	10	1.6	5.3	8	1.7	5.8
60	82	0.8	1.4	51	0.9	1.9	37	1.0	2.5	26	1.1	3.1	19	1.2	3.9	16	1.3	4.4	13	1.4	4.8	11	1.6	5.3	9	1.7	5.7
65	88	0.8	1.4	55	0.9	1.9	40	1.0	2.5	28	1.1	3.1	21	1.2	3.9	17	1.3	4.4	14	1.4	4.9	11	1.6	5.4	10	1.7	5.7
70	95	0.8	1.4	59	0.9	1.9	43	1.0	2.5	30	1.1	3.1	22	1.2	3.9	18	1.3	4.4	15	1.4	4.9	12	1.6	5.4	10	1.7	5.8
75				63	0.9	1.9	46	1.0	2.5	32	1.1	3.2	24	1.2	3.9	20	1.3	4.4	16	1.4	5.0	13	1.6	5.5	11	1.7	5.9
80				67	0.9	2.0	48	1.0	2.5	35	1.1	3.1	25	1.2	3.9	21	1.3	4.4	17	1.4	4.9	14	1.6	5.4	12	1.7	6.0
90				75	0.9	2.0	54	1.0	2.5	39	1.1	3.2	28	1.2	3.9	23	1.3	4.4	19	1.4	4.9	16	1.6	5.5	13	1.7	5.9
100				83	0.9	2.0	60	1.0	2.5	43	1.1	3.2	31	1.2	3.9	26	1.3	4.4	21	1.4	5.0	17	1.6	5.5	15	1.7	6.0

STANDARD AND SPECIFICATIONS FOR EARTH DIKE

Definition & Scope

A **temporary** berm or ridge of compacted soil, located in such a manner as to channel water to a desired location. Its purpose is to direct runoff to a sediment trapping device, thereby reducing the potential for erosion and off site sedimentation. Earth dikes can also be used for diverting clean water away from disturbed areas.

Conditions Where Practice Applies

Earth dikes are often constructed across disturbed areas and around construction sites such as graded parking lots and subdivisions. The dikes shall remain in place until the disturbed areas are permanently stabilized.

Design Criteria

See Figure 3.5 on page 3.15 for details.

General

	Dike A	Dike B
Drainage Area	<5 Ac	5-10 Ac
Dike Height	18 in.	36 in.
Dike Width	24 in.	36 in.
Flow Width	4 ft.	6 ft.
Flow Depth in Channel	8 in.	15 in.
Side Slopes	2:1 or flatter	2:1 or flatter
Grade	0.5% Min. 10% Max.	0.5% Min. 10% Max.

For drainage areas larger than 10 acres, refer to the Standard and Specifications for Diversion on page 3.9.

Stabilization

Stabilization of the dike shall be completed within 2 days of installation in accordance with the standard and specifications for seed and straw mulch or straw mulch only if not in seeding season. The flow channel shall be stabilized as per the following criteria:

Type of Treat-ment	Channel Grade[1]	Flow Channel	
		A (<5 Ac.)	B (5-10 Ac.)
1	0.5-3.0%	Seed & Straw Mulch	Seed & Straw Mulch
2	3.1-5.0%	Seed & Straw Mulch	Seed and cover with RECP, sod, or lined with plastic or 2” stone
3	5.1-8.0%	Seed and cover with RECP, Sod, or line with plastic or 2 in. stone	Line with 4-8 in. rip-rap or, geotextile
4	8.1-10%	Line with 4-8 in. rip-rap or geotextile	Site Specific Design

1 In highly erodible soils, as defined by the local approving agency, refer to the next higher slope grade for type of stabilization.

Outlet

Earth dikes shall have an outlet that functions with a minimum of erosion.

Runoff shall be conveyed to a sediment trapping device until the drainage area above the dike is adequately stabilized.

The on-site location may need to be adjusted to meet field conditions in order to utilize the most suitable outlet.

Figure 3.5
Earth Dike Detail

SYMBOL

A-2, B-3

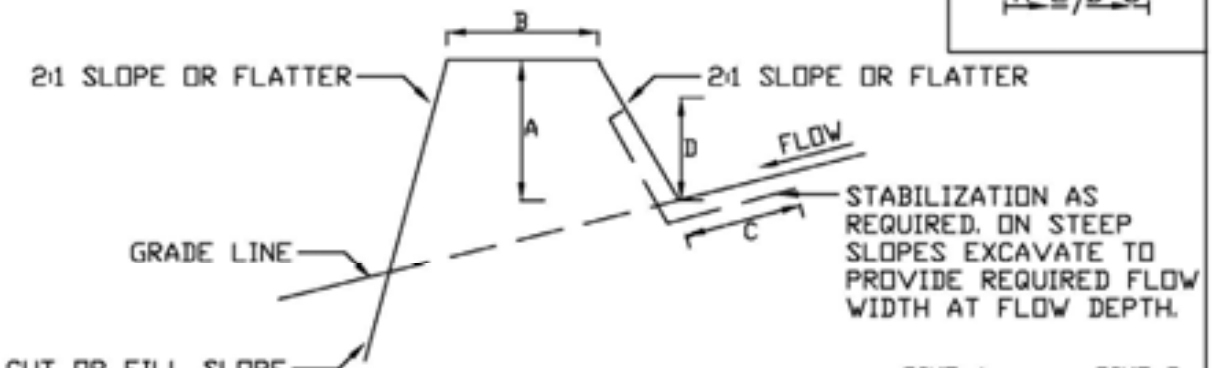

CROSS SECTION

NOT TO SCALE

	DIKE A (5 AC. OR LESS)	DIKE B (5-10AC.)
A - DIKE HEIGHT	18"	36"
B - DIKE WIDTH	24"	36"
C - FLOW WIDTH	48"	72"
D - FLOW DEPTH	8"	15"

POSITIVE DRAINAGE-GRADE SUFFICIENT TO DRAIN

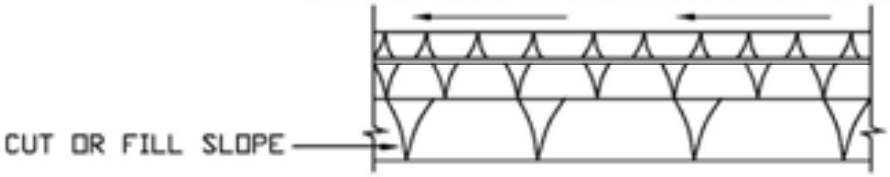

CONSTRUCTION SPECIFICATIONS

1. ALL DIKES SHALL BE COMPACTED BY EARTH-MOVING EQUIPMENT.
2. ALL DIKES SHALL HAVE POSITIVE DRAINAGE TO AN OUTLET.
3. TOP WIDTH MAY BE WIDER AND SIDE SLOPES BE FLATTER IF DESIRED TO FACILITATE CROSSING BY CONSTRUCTION TRAFFIC.
4. FIELD LOCATION SHOULD BE ADJUSTED AS NEEDED TO UTILIZE A STABILIZED SAFE OUTLET.
5. EARTH DIKES SHALL HAVE AN OUTLET THAT FUNCTIONS WITH A MINIMUM OF EROSION. RUNOFF SHALL BE CONVEYED TO A SEDIMENT TRAPPING DEVICE SUCH AS A SEDIMENT TRAP OR SEDIMENT BASIN WHERE EITHER THE DIKE CHANNEL OR THE DRAINAGE AREA ABOVE THE DIKE ARE NOT ADEQUATELY STABILIZED.
6. FILL STABILIZATION SHALL BE: (A) IN ACCORDANCE WITH STANDARD SPECIFICATIONS FOR SEED AND STRAW MULCH IF NOT IN SEEDING SEASON, (B) FLOW CHANNEL STABILIZATION PER THE STANDARD CHART BASED ON CHANNEL GRADE.

ADAPTED FROM DETAILS PROVIDED BY: USDA - NRCS, NEW YORK STATE DEPARTMENT OF TRANSPORTATION, NEW YORK STATE DEPARTMENT OF ENVIRONMENTAL CONSERVATION, NEW YORK STATE SOIL & WATER CONSERVATION COMMITTEE

EARTH DIKE

STANDARD AND SPECIFICATIONS FOR FLOW DIFFUSER

Definition & Scope

A permanent non-erosive outlet for concentrated runoff constructed to diffuse flow uniformly through a stone matrix onto a stablilized area in the form of shallow, low velocity, sheet flow.

Conditions Where Practice Applies

Where sediment-free stormwater runoff can be released in low velocity sheet flow down stabilized areas without causing erosion; where the ground slope at the outlet of the diffuser is less than 30% and the runoff will not re-concentrate after release; and where construction of a flow spreader is not practicable.

Design Criteria

1. **Drainage area:** The maximum drainage area to the diffuser may not exceed 0.10 acre per foot length of the flow diffuser. The drainage area served by the diffuser discharging directly cannot be 10-20% more than half the size of the receiving buffer area.

2. **Discharge from diffuser onto receiving area:** The peak stormwater flow rate from a flow diffuser onto a receiving area from a 10-year 24-hour storm must be less than 0.25 cubic feet per second (0.25 cfs) per linear foot of weir crest length.

3. **Receiving area of buffer:** Each flow diffuser shall have a vegetated receiving area with a minimum continuous length of 150 feet and the capacity to pass the flow without erosion. The receiving area shall be stable prior to the construction of the flow diffuser. The receiving area shall have topography regular enough to prevent undue flow concentration before entering a stable watercourse but it shall have a slope that is less than 30%. If the receiving area is not presently stable, then the receiving area shall be stabilized prior to construction of the flow diffuser. The receiving area below the flow diffuser shall be protected from harm during construction. Sodding and/or turf reinforcement mat (TRM) in combination with vegetative measures shall stabilize disturbed areas. The receiving area shall not be used by the flow diffuser until stabilization has been accomplished. A temporary diversion may be necessary in this case.

4. **Cross-section:** The minimum stone diffuser cross-section shall be trapezoidal with a height of 1 foot above natural ground; top width equal to 2 foot and side slope equal to 1 horizontal to 1 vertical. The storage area behind the diffuser shall be excavated to a depth of 1 foot and overall width of storage area equal to 6 feet minimum.

5. **Sizing the diffuser:** The length of the stone diffuser is governed by the size of the stone in the structure, the height of the diffuser, and the flow length through it. The following equation is used to establish the design of the diffuser:

$$Q_d = \frac{h^{3/2} W}{[(\frac{L}{D}) + 2.5 + L^2]^{0.5}}$$

Where:

Q_d = Outflow through the stone diffuser (cfs)
h = Ponding depth behind the diffuser (ft.)
W = Linear length of the diffuser along centerline (ft.)
L = Average horizontal flow length through the diffuser perpendicular to the centerline (ft.)
D = Average stone diameter (d_{50}) in the structure (ft.)

The maximum d_{50} size shall be 9” or 0.75’.

The designer shall calculate the length of diffuser needed depending on the geometry of the cross-section and rock size to be used recognizing that the maximum allowable discharge through the diffuser shall be 0.25 cfs per foot of length.

Once the discharge is calculated for the 10 year storm for the drainage area to the diffuser (Q_{10}) it can be divided by the design discharge of the diffuser to determine the diffuser length as follows:

$$W = \frac{Q_{10}}{Q_d}$$

Where:

Q_d = Outflow through the stone diffuser (cfs/ft)
Q_{10} = Discharge rate for the 10 year storm (cfs)
W = Linear length of the diffuser along centerline (ft.)

Design examples are shown in Appendix B.

Figure 3.6
Flow Diffuser Detail

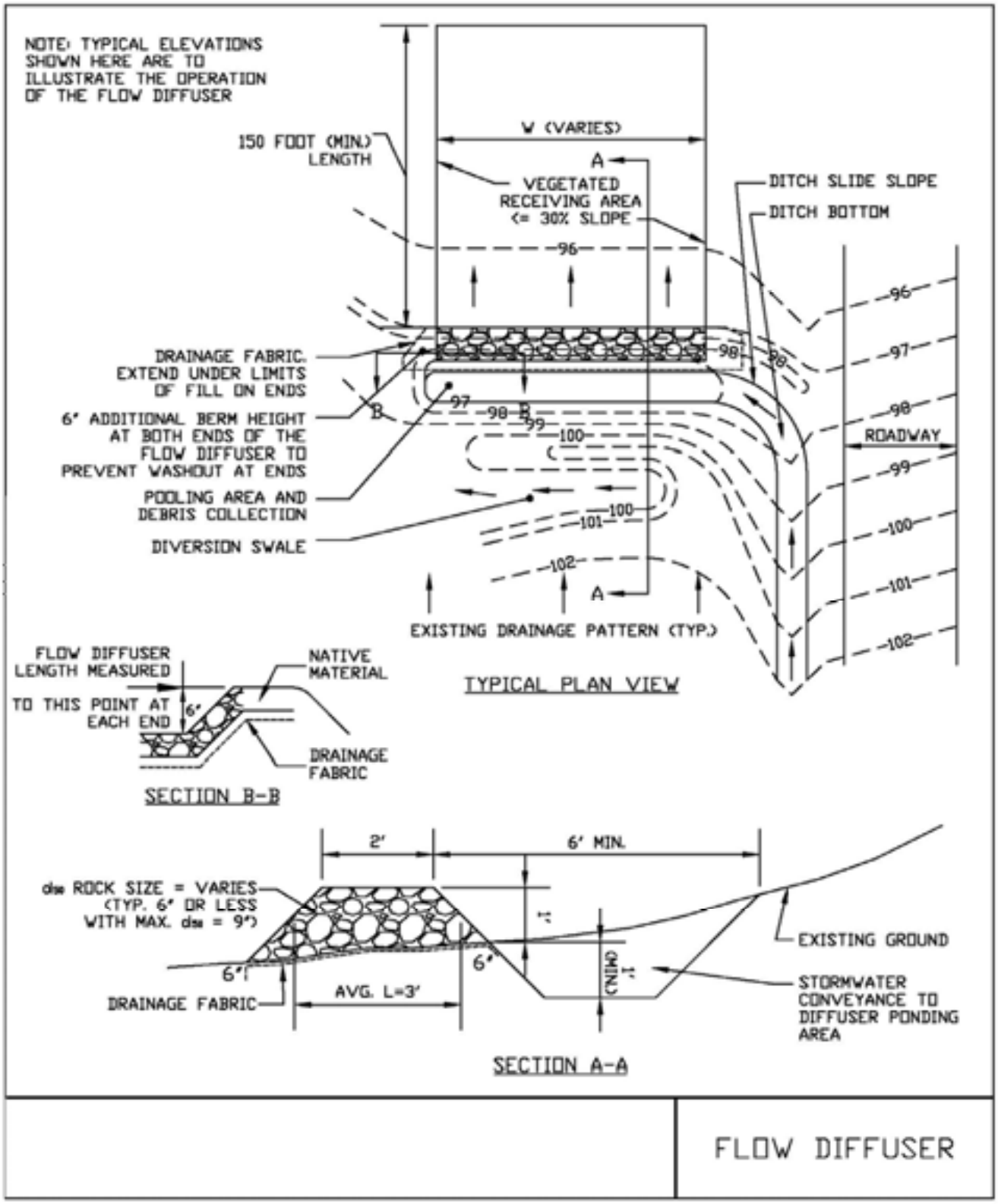

STANDARD AND SPECIFICATIONS FOR FLOW SPREADER

Definition & Scope

A **permanent or temporary,** non-erosive outlet for concentrated runoff, constructed to disperse concentrated flow uniformly over a hardened weir into a stabilized area as shallow, low velocity, sheet flow.

Conditions Where Practice Applies

Where sediment-free storm runoff can be released in sheet flow down a stabilized slope without causing erosion; where a hardened level weir can be constructed without filling; where the area below the weir is uniform with a slope of 10% or less and the runoff will not re-concentrate after release; and where no traffic will disturb the flow spreader.

Design Criteria

1. **Drainage area:** The maximum drainage area to the spreader may not exceed 5 acres.

2. **Discharge to a flow spreader:** The peak stormwater flow rate to a flow spreader due to runoff from a 10-year 24-hour storm must be less than 0.5 cubic feet per second (0.5 cfs) per foot length of flow spreader lip.

3. **Length of flow spreader:** The flow spreader length may not be more than 30 feet if flow is entering from one end of the spreader. Longer lengths require flow to split evenly from the center of the spreader.

4. **Receiving area of buffer:** Each flow spreader shall have a vegetated receiving area with the capacity to pass the flow without erosion. The receiving area shall be stable prior to the construction of the flow spreader. The receiving area shall have topography regular enough to prevent undue flow concentration before entering a stable watercourse but it shall have a slope that is less than 10%. If the receiving area is not presently stable, then the receiving area shall be stabilized prior to construction of the flow spreader. The receiving area below the flow spreader shall be protected from harm during construction. Sodding and/or turf reinforced mat in combination with vegetative measures shall stabilize disturbed areas. The receiving area shall not be used by the flow spreader until stabilization has been accomplished. A temporary diversion may be necessary in this case.

5. **Weir:** The weir of the flow spreader should consist of a pressure treated 2”x12” timber plank laid on edge and set at level elevation perpendicular to flow. Alternate hardened weir structures may be used as long as a hard, durable, continuous weir is maintained.

6. **Channel:** The flow spreader entrance channel shall be a minimum of 1 foot deep with a minimum 2 foot bottom width to trap sediment and reduce lateral flow velocities. Side slopes shall be 2:1 or flatter. The channel shall be constructed with a 0% grade to ensure uniform flow distribution. Velocity entering the channel shall be reduced to ensure non-erosive low approach velocity in the weir.

7. **Maintenance:** Long term maintenance of the flow spreader is essential to ensure its continued effectiveness. The following provisions should be followed. In the first year the flow spreader should be inspected semi annually and following major storm events for any signs of channelization and should be immediately repaired. After the first year, annual inspection should be sufficient. Spreaders constructed of wood, asphalt, stone or concrete curbing require periodic inspection to check for damage and to be repaired as needed.

   A. **Inspections:** At least once a year, the spreader pool should be inspected for sand accumulation and debris that may reduce capacity.

   B. **Maintenance Access:** Flow spreaders should be sited to provide easy access for removal of accumulated sediment and rehabilitation of the berm.

   C. **Debris Removal:** Debris buildup within the channel should be removed when it has accumulated to approximately 10 to 20% of design volume or channel capacity. Remove debris such as leaf litter, branches, tree growth and any sediment build-up from the spreader and dispose of appropriately.

   D. **Mowing:** Vegetated spreaders may require mowing.

Figure 3.7
Flow Spreader Detail

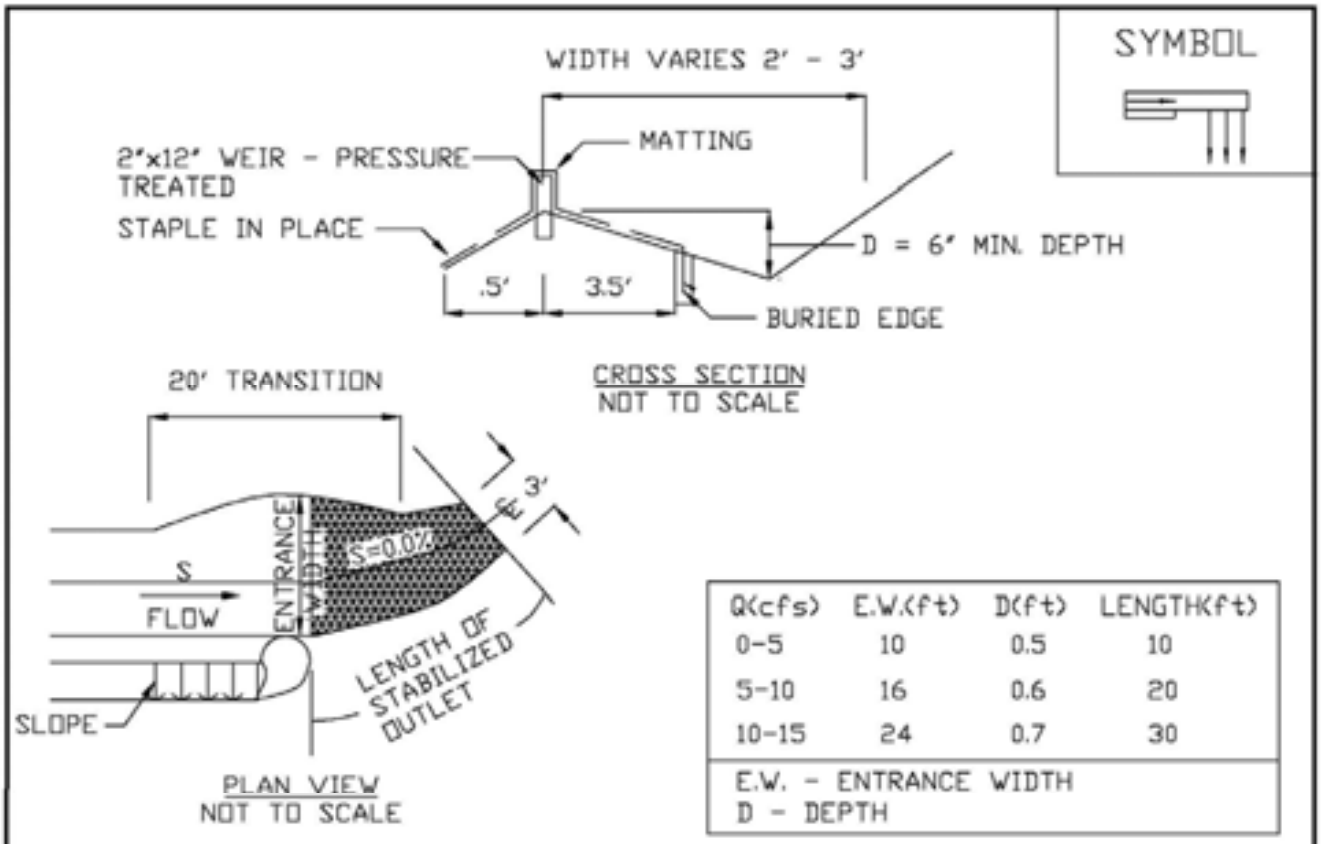

Q(cfs)	E.W.(ft)	D(ft)	LENGTH(ft)
0-5	10	0.5	10
5-10	16	0.6	20
10-15	24	0.7	30

E.W. - ENTRANCE WIDTH
D - DEPTH

CONSTRUCTION SPECIFICATIONS

1. THE MATTING SHOULD BE A MINIMUM OF 4FT. WIDE EXTENDING 6 INCHES OVER THE WEIR AND BURIED 6 INCHES DEEP IN A VERTICAL TRENCH ON THE LOWER EDGE. THE UPPER EDGE SHOULD BUTT AGAINST SMOOTHLY CUT SOD AND BE SECURELY HELD IN PLACE WITH CLOSELY SPACED HEAVY DUTY WIRE STAPLES AT LEAST 12 INCHES IN LENGTH.
2. ENSURE THAT THE WEIR IS LEVEL TO UNIFORMLY SPREAD DISCHARGE.
3. THE WEIR SHALL BE PLACED IN UNDISTURBED SOIL NOT FILL.
4. A 20 FOOT TRANSITION SECTION WILL BE CONSTRUCTED FROM THE DIVERSION CHANNEL TO THE SPREADER TO SMOOTHLY BLEND THE DIFFERENT DIMENSION AND GRADES.
5. THE RUNOFF DISCHARGE WILL BE OUTLETED ONTO A STABILIZED VEGETATED SLOPE NOT EXCEEDING 10%.
6. SEED AND MULCH THE DISTURBED AREA IMMEDIATELY AFTER CONSTRUCTION.

ADAPTED FROM DETAILS PROVIDED BY: USDA - NRCS,
NEW YORK STATE DEPARTMENT OF TRANSPORTATION,
NEW YORK STATE DEPARTMENT OF ENVIRONMENTAL CONSERVATION
NEW YORK STATE SOIL & WATER CONSERVATION COMMITTEE

FLOW SPREADER

STANDARD AND SPECIFICATIONS FOR GRADE STABILIZATION STRUCTURE

Definition & Scope

A **permanent** structure to stabilize the grade or to control head cutting in artificial channels by reduction of velocities and grade in the watercourse or by providing channel linings or structures that can withstand the higher velocities.

Conditions Where Practice Applies

This practice applies to sites where the capability of earth and vegetative measures is exceeded in the safe handling of water at permissible velocities, where excessive grades or overfall conditions are encountered, or where water is to be lowered structurally from one elevation to another. These structures should generally be planned and installed along with, or as a part of, other practices in an overall surface water management system.

Design Criteria

Compliance with Laws and Regulations

Design and construction shall be in compliance with state and local laws and regulations. Such compliance is the responsibility of the landowner or developer.

General

Designs and specifications shall be prepared for each structure on an individual job basis depending on its purpose, site conditions, and the basic criteria of the conservation practice with which the structure is planned. Typical structures are as follows:

1. Channel linings of concrete, asphalt, half round metal pipe or other suitable lining materials. These linings should generally be used where channel velocities exceed safe velocities for vegetated channels due to increased grade or a change in channel cross section or where durability of vegetative lining is adversely affected by seasonal changes. Adequate protection will be provided to prevent erosion or scour of both ends of the channel lining.

2. Overfall structures of concrete, metal, rock riprap, or other suitable material is used to lower water from one elevation to another. These structures are applicable where it is desirable to drop the watercourse elevation over a very short horizontal distance. Adequate protection will be provided to prevent erosion or scour upstream, downstream and along sides of overfall structures. Structures should be located on straight sections of channel with a minimum of 100 feet of straight channel each way.

3. Pipe drops of metal pipe with suitable inlet and outlet structures. The inlet structure may consist of a vertical section of pipe or similar material, an embankment, or a combination of both. The outlet structure will provide adequate protection against erosion or scour at the pipe outlet.

Capacity

Structures that are designed to operate in conjunction with other erosion control practices shall have, as a minimum, capacity equal to the bankfull capacity of the channel delivering water to the structures. The minimum design capacity for structures that are not designed to perform in conjunction with other practices shall be that required to handle the peak rate of flow from a 10-year, 24-hour frequency storm or bankfull, whichever is greater. Peak rates of runoff used in determining the capacity requirements shall be determined by appropriate methods.

Set the rest of the structure at an elevation that will stabilize the grade of the upstream channel. The outlet should be set at an elevation to assure stability. Outlet velocities should be kept within the allowable limits for the receiving stream. Structural drop spillways need to include a foundation drainage system to reduce hydrostatic loads.

Permanent structures which involve the retarding of floodwater or the impoundment of water shall be designed using the criteria set forth in the New York State DEC Guidelines for the Design of Dams.

Construction Specifications

Structures shall be installed according to lines and grades shown on the plan. The foundation for structures shall be cleared of all undesirable materials prior to the installation of the structure. Materials used in construction shall be in conformance with the design frequency and life expectancy of the practice. Earth fill, when used as a part of the structure, shall be placed in 4-inch lifts and hand compacted within 2 feet of the structure.

Seeding, fertilizing, and mulching shall conform to the applicable standards and specifications in Section 4.

Construction operations shall be carried out in such a manner that erosion and air and water pollution will be minimized. State and local laws concerning pollution abatement shall be complied with at every site.

Locate emergency bypass areas so that floods in excess of structural capacity enter the channel far enough downstream so as not to cause damage to the structure.

Maintenance

Once properly installed, the maintenance for the grade stabilization structure should be minimal. Inspect the structure periodically and after major storm events. Check fill for piping or extreme settlement. Ensure a good vegetative cover. Check the channel for scour or debris and loss of rock from aprons. Repair or replace failing structures immediately.

STANDARD AND SPECIFICATIONS FOR GRASSED WATERWAY

Definition & Scope

A natural or **permanent** man-made channel of parabolic or trapezoidal cross-section that is below adjacent ground level and is stabilized by suitable vegetation. The flow channel is normally wide and shallow and conveys the runoff down the slope without causing damage by erosion.

Conditions Where Practice Applies

Grass waterways are used where added vegetative protection is needed to control erosion resulting from concentrated runoff.

Design Criteria

Capacity

The minimum capacity shall be that required to confine the peak rate of runoff expected from a 10-year 24 hour frequency rainfall event or a higher frequency corresponding to the hazard involved. This requirement for confinement may be waived on slopes of less than one (1) percent where out-of-bank flow will not cause erosion or property damage.

Peak rates of runoff values used in determining the capacity requirements shall be computed by appropriate methods. Where there is base flow, it shall be handled by a stone center, subsurface drain, or other suitable means since sustained wetness usually prevents adequate vegetative cover. The cross-sectional area of the stone center or subsurface drain size to be provided shall be determined by using a flow rate of 0.1 cfs/acre or by actual measurement of the maximum base flow.

Velocity

Please see Table 3.1, Diversion Maximum Permissible Design Velocities on page 3.10, for seed, soil, and velocity variables.

Cross Section

The design water surface elevation of a grassed waterway receiving water from diversions or other tributary channels shall be equal to or less than the design water surface elevation in the diversion or other tributary channels.

The top width of parabolic waterways shall not exceed 30 feet and the bottom width of trapezoidal waterways shall not exceed 15 feet unless multiple or divided waterways, stone center, or other means are provided to control meandering of low flows.

Structural Measures

In cases where grade or erosion problems exist, special control measures may be needed such as lined waterways (see page 3.27), or grade stabilization measures (see page 3.21). Where needed, these measures will be supported by adequate design computations. For typical cross sections of waterways with riprap sections or stone centers, refer to Figure 3.8 on page 3.24.

The design procedures for parabolic and trapezoidal channels are available in the NRCS Engineering Field Handbook. Figure 3.9 on page 3.25 also provides a design chart for parabolic waterway.

Outlets

Each waterway shall have a stable outlet. The outlet may be another waterway, a stabilized open channel, grade stabilization structure, etc. In all cases, the outlet must discharge in such a manner as not to cause erosion. Outlets shall be constructed and stabilized prior to the operation of the waterway.

Stabilization

Waterways shall be stabilized in accordance with the appropriate vegetative stabilization standard and specifications, and will be dependent on such factors as slope, soil class, etc. See standard for Vegetating Waterways on Page 4.78.

Construction Specifications

See Figure 3.10 on page 3.26 for details.

Figure 3.8
Typical Waterway Cross Sections Details

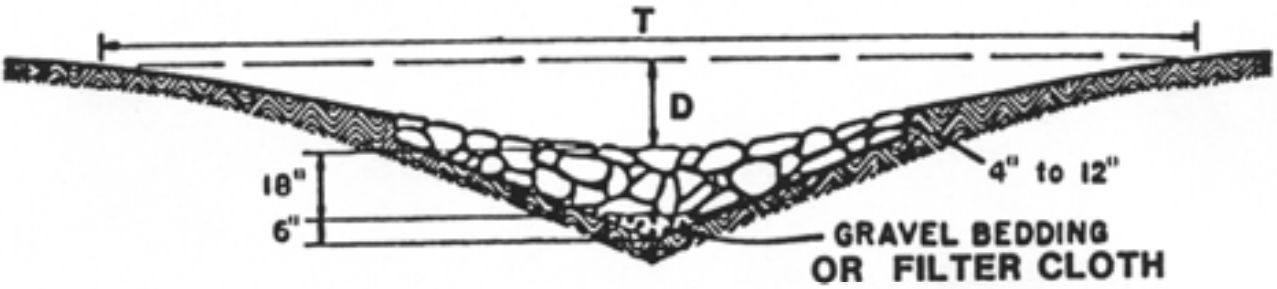

Waterway with stone center drain. "V" section shaped by motor grader.

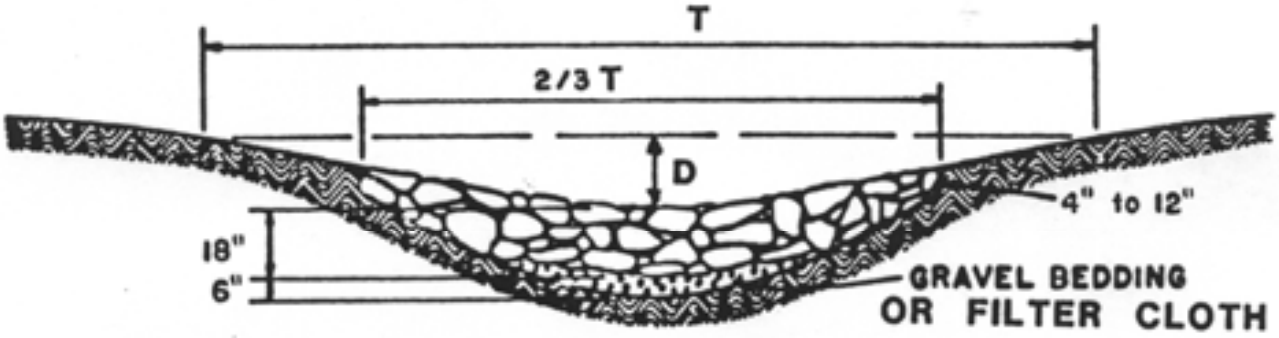

Waterway with stone center drain. Rounded section shaped by bulldozer.

Figure 3.9
Parabolic Waterway Design Chart (USDA - NRCS)

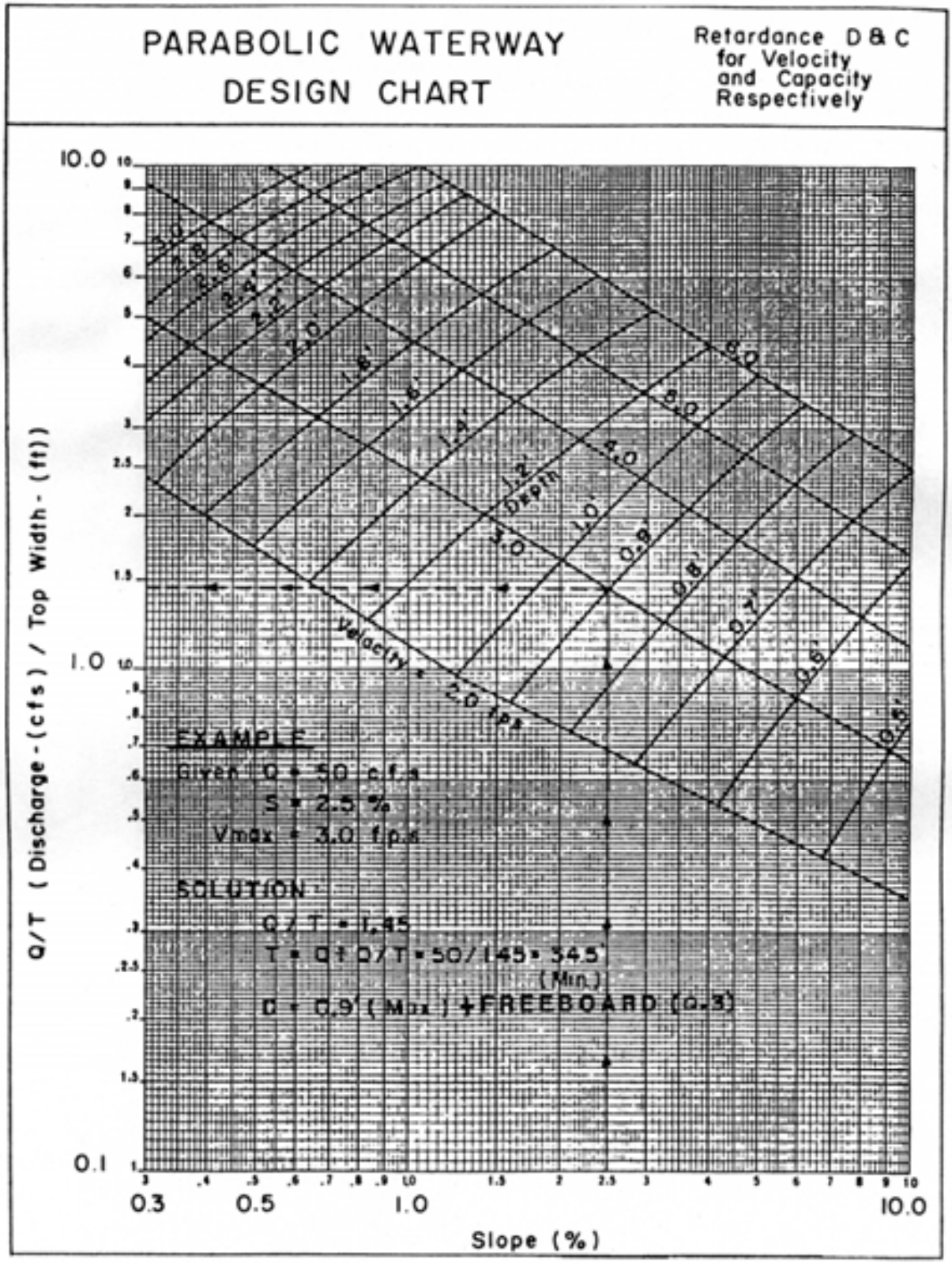

Figure 3.10
Grassed Waterway Detail

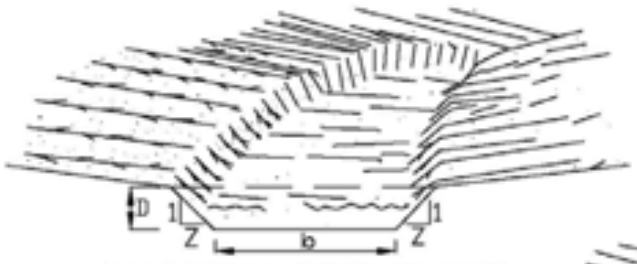

TRAPEZIODAL CROSS SECTION

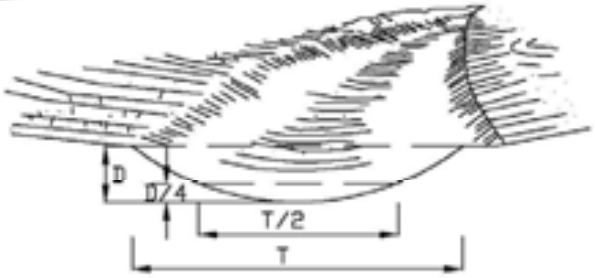

PARABOLIC CROSS SECTION

SYMBOL

GL

CONSTRUCTION SPECIFICATIONS

1. ALL TREES, BRUSH, STUMPS, OBSTRUCTIONS, AND OTHER OBJECTIONABLE MATERIAL SHALL BE REMOVED AND DISPOSED OF SO AS NOT TO INTERFERE WITH THE PROPER FUNCTIONING OF THE WATERWAY.
2. THE WATERWAY SHALL BE EXCAVATED OR SHAPED TO LINE, GRADE, AND CROSS SECTION AS REQUIRED TO MEET THE CRITERIA SPECIFIED HEREIN, AND BE FREE OF BANK PROJECTIONS OR OTHER IRREGULARITIES WHICH WILL IMPEDE NORMAL FLOW.
3. FILLS SHALL BE COMPACTED AS NEEDED TO PREVENT UNEQUAL SETTLEMENT THAT WOULD CAUSE DAMAGE IN THE COMPLETE WATERWAY.
4. ALL EARTH REMOVED AND NOT NEEDED IN CONSTRUCTION SHALL BE SPREAD OR DISPOSED OF SO THAT IT WILL NOT INTERFERE WITH THE FUNCTIONING OF THE WATERWAY.
5. STABILIZATION SHALL BE DONE ACCORDING TO THE APPROPRIATE STANDARD AND SPECIFICATIONS FOR VEGETATIVE PRACTICES.
   A. FOR DESIGN VELOCITIES OF LESS THAN 3.5 FT. PER. SEC., SEEDING AND MULCHING MAY BE USED FOR THE ESTABLISHMENT OF THE VEGETATION. IT IS RECOMMENDED THAT, WHEN CONDITIONS PERMIT, TEMPORARY WATERWAYS OR OTHER MEANS SHOULD BE USED TO PREVENT WATER FROM ENTERING THE WATERWAY DURING THE ESTABLISHMENT OF THE VEGETATION.
   B. FOR DESIGN VELOCITIES OF MORE THAN 3.5 FT. PER. SEC., THE WATERWAY SHALL BE STABILIZED WITH SOD, WITH SEEDING PROTECTED BY JUTE OR EXCELSIOR MATTING OR WITH SEEDING AND MULCHING INCLUDING TEMPORARY DIVERSION OF THE WATER UNTIL THE VEGETATION IS ESTABLISHED.
   C. STRUCTURAL - VEGETATIVE PROTECTION
   SUBSURFACE DRAIN FOR BASE FLOW SHALL BE CONSTRUCTED AS SHOWN ON THE STANDARD DRAWING AND AS SPECIFIED IN THE STANDARD AND SPECIFICATIONS FOR SUBSURFACE DRAIN.

ADAPTED FROM DETAILS PROVIDED BY: USDA - NRCS, NEW YORK STATE DEPARTMENT OF TRANSPORTATION, NEW YORK STATE DEPARTMENT OF ENVIRONMENTAL CONSERVATION, NEW YORK STATE SOIL & WATER CONSERVATION COMMITTEE	GRASSED WATERWAY

STANDARD AND SPECIFICATIONS FOR LINED WATERWAY

Definition & Scope

A **permanent** waterway or outlet with a lining of concrete, stone, or other durable, hardened material. The lined section extends up the side slopes to the designed depth. The earth above the permanent lining may be vegetated or otherwise protected.

The lined waterway is constructed to provide for the disposal of concentrated runoff without damage from erosion or flooding, where grassed waterways would be inadequate due to high velocities.

Conditions Where Practice Applies

This standard applies to waterways or outlets with linings of cast-in-place concrete, flagstone mortared in place, rock riprap, gabions, or similar permanent linings. It does not apply to irrigation ditch or canal linings, grassed waterways with stone centers or small lined sections that carry prolonged low flows, or to reinforced concrete channels. Lined waterways should not be used if they are directly discharging to C(T) or higher streams unless thermal impacts are mitigated by biotechnical practices (Section 4). The maximum capacity of the waterway flowing at design depth shall not exceed 100 cubic feet per second.

This practice applies where the following or similar conditions exist:

1. Concentrated runoff is such that a lining is required to control erosion.
2. Steep grades, wetness, prolonged base flow, seepage, or piping that would cause erosion.
3. The location is such that damage from use by people or animals precludes use of vegetated waterways or outlets.
4. Soils are highly erosive or other soil and climate conditions preclude using vegetation.
5. High value property or adjacent facilities warrant the extra cost to contain design runoff in a limited space.

Design Criteria

Capacity

1. The minimum capacity shall be adequate to carry the peak rate of runoff from a 10-year, 24-hour storm. Velocity shall be computed using Manning's equation with a coefficient of roughness "n" as follows:

Lined Material	"n"
Concrete (Type):	
Trowel Finish	0.015
Float Finish	0.019
Gunite	0.019
Flagstone	0.022
Riprap	Determine from Figure 3.11 on page 3.30
Gabion	0.030

2. Riprap gradation and filter (bedding) are generally designed in accordance with criteria set forth in the National Cooperative Highway Research Program Report 108, available from the University Microfilm International, 300 N. Zeeb Road, Ann Arbor, Michigan 48106, Publication No. PB-00839; or the Hydraulic Engineering Circular No. 11, prepared by the U.S. Bureau of Public Roads, available from Federal Highway Administration, 400 7th Street, S.W., Washington, D.C. 20590, HNG-31, or the procedure in the USDA-NRCS's Engineering Field Manual, Chapter 16.

Velocity

1. Maximum design velocity shall be as shown below. Except for short transition sections, flow with a channel gradient within the range of 0.7 to 1.3 of this flow's critical slope must be avoided unless the channel is straight. Velocities exceeding critical will be restricted to straight reaches.

Design Flow Depth (ft.)	Maximum Velocity (ft./sec.)
0.0 - 0.5	25
0.5 - 1.0	15
Greater than 1.0	10

2. Waterways or outlets with velocities exceeding critical shall discharge into an energy dissipater to reduce velocity to less than critical, or to a velocity the downstream soil and vegetative conditions will allow.

Cross Section

The cross section shall be triangular, parabolic, or trapezoidal. Monolithic concrete or gabions may be rectangular.

Freeboard

The minimum freeboard for lined waterways or outlets shall be 0.25 feet above design high water in areas where erosion resistant vegetation cannot be grown adjacent to the paved side slopes. No freeboard is required where good vegetation can be grown and is maintained.

Side Slope

Steepest permissible side slopes, horizontal to vertical will be as follows:

1. Non-Reinforced Concrete
   Hand-placed, formed concrete
   Height of lining, 1.5 ft or less ..... Vertical
   Hand placed screened concrete or mortared
   In-place flagstone
   Height of lining, less than 2 ft ..... 1 to 1
   Height of lining, more than 2 ft ..... 2 to 1
2. Slip form concrete:
   Height of lining, less than 3 ft ..... 1 to 1
3. Rock Riprap ..... 2 to 1
4. Gabions ..... Vertical
5. Pre-cast Concrete Sections ..... Vertical

Lining Thickness

Minimum lining thickness shall be as follows:

1. Concrete ..... 4 in. (In most problem areas, shall be 5 in. with welded wire fabric reinforcing)

2. Rock Riprap ..... 1.5 x maximum stone size plus thickness of filter or bedding.

3. Flagstone ..... 4 in. including mortar bed.

Related Structures

Side inlets, drop structures, and energy dissipaters shall meet the hydraulic and structural requirements of the site.

Filters or Bedding

Filters or bedding to prevent piping, reduce uplift pressure, and collect water will be used as required and will be designed in accordance with sound engineering principles. Weep holes and drains should be provided as needed.

Concrete

Concrete used for lining shall be so proportioned that it is plastic enough for thorough consolidation and stiff enough to stay in place on side slopes. A dense product will be required. A mix that can be certified as suitable to produce a minimum strength of at least 3,000 pounds per square inch will be required. Cement used shall be Portland Cement, Type I, II, IV, or V. Aggregate used shall have a maximum diameter of 1 ½ inches.

Weep holes should be provided in concrete footings and retaining walls to allow free drainage of water. Pipe used for weep holes shall be non-corrosive.

Mortar

Mortar used for mortared in-place flagstone shall consist of a mix of cement, sand, and water. Follow directions on the bag of mortar for proper mixing of mortar and water.

Contraction Joints

Contraction joints in concrete linings, where required, shall be formed transversely to a depth of about one third the thickness of the lining at a uniform spacing in the range of 10 to 15 feet.

Rock Riprap or Flagstone

Stone used for riprap or gabions shall be dense and hard enough to withstand exposure to air, water, freezing, and thawing. Flagstone shall be flat for ease of placement and have the strength to resist exposure and breaking. Rock riprap maximum size shall be as follows:

Velocity (f.p.s.)	d_{max} (in.)
5.0	6
8.5	12
10	18
12	24
15	36

A complete listing riprap gradations is provided in Table 4.1, page 4.9.

Cutoff Walls

Cutoff walls shall be used at the beginning and ending of concrete lining. For rock riprap lining, cutoff walls shall be keyed into the channel bottom and at both ends of the lining.

Construction Specifications

1. The foundation area shall be cleared of trees, stumps, roots, sod, loose rock, or other objectionable material.

2. The cross-section shall be excavated to the neat lines and grades as shown on the plans. Over-excavated areas shall be backfilled with moist soil compacted to the density of the surrounding material.

3. No abrupt deviations from design grade or horizontal alignment shall be permitted.

4. Concrete linings shall be placed to the thickness shown on the plans and trowel finished. Adequate precautions shall be taken to protect freshly placed concrete from extreme (hot or cold) temperatures, to ensure proper curing.

5. Filter bedding and rock riprap shall be placed to line and grade in the manner specified.

6. Construction operation shall be done in such a manner that erosion, air pollution, and water pollution will be minimized and held within legal limits. The completed job shall meet all design requirements for the appropriate finish. All disturbed areas shall be vegetated or otherwise protected against soil erosion.

Maintenance

Pavement or lining should be maintained as built to prevent undermining and deterioration. Existing trees next to pavements should be removed, as roots can cause uplift damage.

Vegetation next to pavement should be maintained in good condition to prevent scouring if the pavement is overtopped. See Standard and Specifications for Permanent Construction Area Planting on page 4.42.

Figure 3.11
Determining "n" for Riprap Lined Channel using Depth of Flow Chart
(USDA - NRCS)

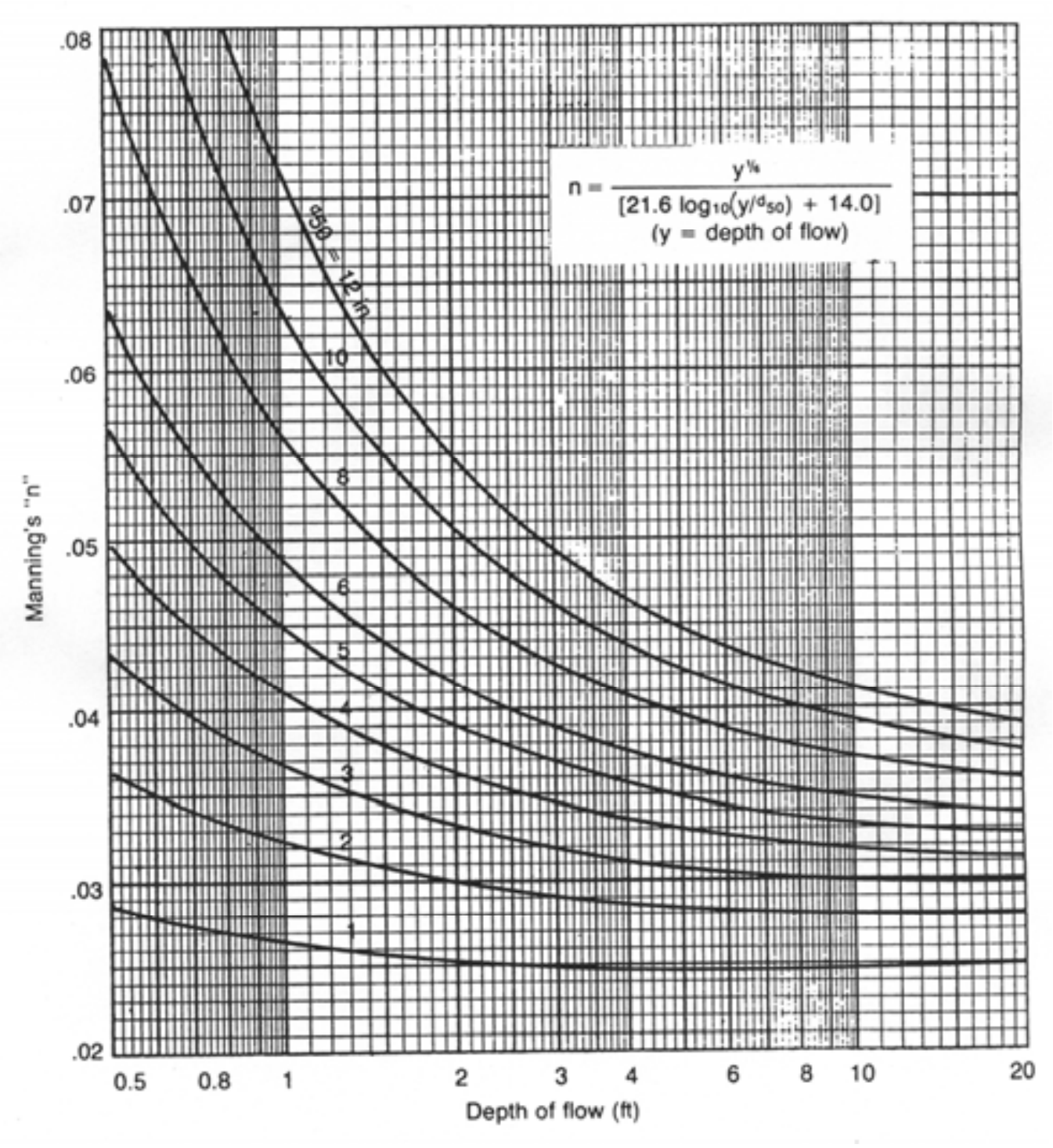

STANDARD AND SPECIFICATIONS FOR PAVED FLUME

Definition & Scope

A **permanent** small concrete-lined channel to convey water from a higher to a lower elevation in a short distance such as down the face of a cut or fill slope without causing erosion. Due to potential thermal impacts and the creation of fish migration barriers, paved flumes shall not be used for direct discharges to C(T) or higher streams.

Condition Where Practice Applies

Where concentrated storm runoff must be conveyed down a cut or fill slope as part of a permanent erosion control system. Paved flumes serve as stable outlets for diversions, drainage channels, or natural drainageways, that are located above relatively steep slopes. Paved flumes should be used on slopes of 1:5 to 1 or flatter.

Design Criteria

Capacity – Minimum capacity should be the 10-year frequency storm. Freeboard or enough bypass capacity should be provided to safeguard the structure from peak flows expected for the life of the structure.

Slope – The slope should not be steeper than 1.5:1 (67%).

Cutoff Walls – Install cutoff walls at the beginning and end of paved flumes. The cutoff should extend a minimum of 18 inches into the soil and across the full width of the flume and be 6 inches thick. Cutoff walls should be reinforced with #3 reinforcing bars (3/8”) placed on a 6-inch grid in the center of the wall.

Anchor Lugs – Space anchor lugs a minimum of 10 feet on centers for the length of the flume. They will extend the width of the flume, extend 1 foot into subsoil, be a minimum of 6 inches thick, and be reinforced with #3 reinforcing bars placed on a 6-inch grid.

Concrete – Minimum strength of design mix shall be 3000 psi. Concrete thickness shall be a minimum of 6 inches reinforced with #3 reinforcing bars. Mix shall be dense, durable, stiff enough to stay in place on steep slopes, and sufficiently plastic for consolidation. Concrete mix should include an air-entraining admixture to resist freeze-thaw cycles.

Cross Section – Flumes shall have minimum depth of 1 foot with 1.5:1 side slopes. Bottom widths shall be based on maximum flow capacity. Chutes will be maintained in a straight alignment because of supercritical flow velocities.

Drainage filters – Use a drainage filter with all paved flumes to prevent piping and reduce uplift pressures. Size of the filter material will be dependent on the soil material the flume is located in.

Inlet Section – Design the inlet to the following minimum dimensions: side walls 2 feet high, length 6 feet, width equal to the flume channel bottom, and side slopes the same as the flume channel side slopes.

Outlet Section – Outlets must be protected from erosion. Usually an energy dissipater is used to reduce the high chute velocities to lower non-erosive velocities. Rock riprap should be placed at the end of the dissipater to spread flow evenly to the receiving channel.

See Figure 3.12 on page 3.33 for examples of outlet structures.

Invert – Precast concrete sections may be used in lieu of cast in place concrete. The sections should be designed at the joint to be overlapped to prevent displacement between sections. Joint sealing compound should be used to prevent migration of soil through a joint. Cutoff walls and anchor lugs should be cast in the appropriate sections to accommodate the design criteria.

Small Flumes – Where the drainage area is 10 acres or less, the design dimensions for concrete flumes may be selected from those shown in the table on the following page:

	Drainage Area (Acres)	
	5	**10**
Min. Bottom Width (ft.)	4	8
Min. Inlet Depth (ft.)	2	2
Min. Channel Depth (ft.)	1.3	1.3
Max. Channel Slope	1.5:1	1.5:1
Max. Side Slope	1.5:1	1.5:1

See Figure 3.13 on page 3.34 for details.

Construction Specifications

1. The subgrade shall be constructed to the lines and grades shown on the plans. Remove all unsuitable material and replace them if necessary with compacted stable fill materials. Shape subgrade to uniform surface. Where concrete is poured directly on subsoil, maintain it in a moist condition.

2. On fill slopes, the soil adjacent to the chute, for a minimum of 5 feet, must be well compacted.

3. Where drainage filters are placed under the structure, the concrete will not be poured on the filter. A plastic liner, a minimum of 4 mils thick, will be placed to prevent contamination of filter layer.

4. Place concrete for the flume to the thickness shown on the plans and finish according to details. Protect freshly poured concrete from extreme temperatures (hot or cold) and ensure proper curing.

5. Form, reinforce, and pour together cutoff walls, anchor lugs and channel linings. Provide traverse joints to control cracking at 20-foot intervals. Joints can be formed by using a 1/8 inch thick removable template or by sawing to a minimum depth of 1 inch. Flumes longer than 50 feet shall have preformed expansion joints installed.

6. Immediately after construction, all disturbed areas will be final graded and seeded.

Maintenance

Inspect flumes after each rainfall until all areas adjoining the flume are permanently stabilized. Repair all damage immediately. Inspect outlet and rock riprap to assure presence and stability. Any missing components should be immediately replaced.

Figure 3.12
Examples of Outlet Structures

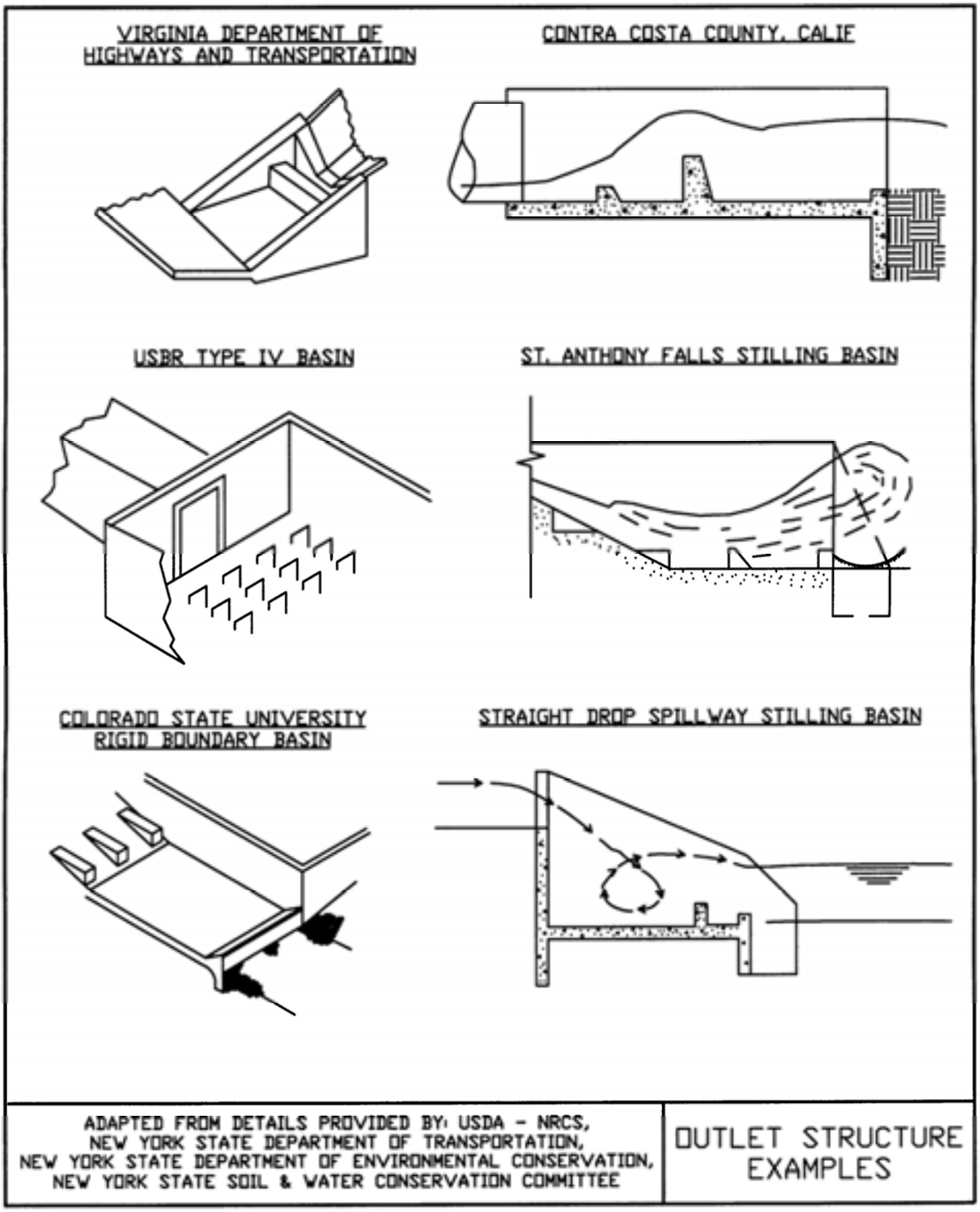

Figure 3.13
Paved Flume Detail

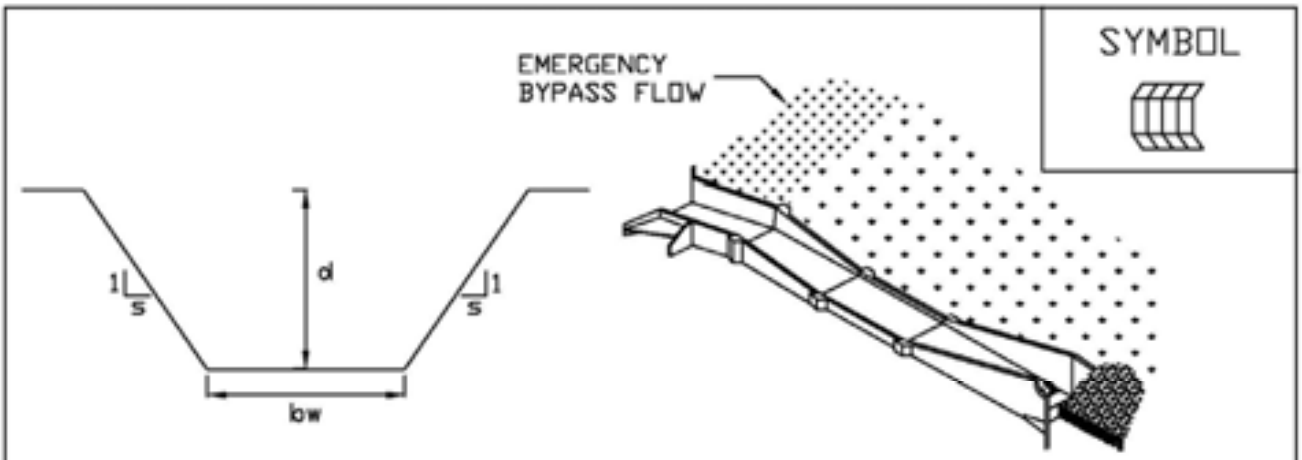

DRAINAGE AREA (AC)	MIN BOTTOM WIDTH (FT)	MIN CHANNEL DEPTH (FT)	MAX SIDE SLOPE (FT/FT)	MIN INLET DEPTH (FT)	MAX CHANNEL SLOPE (FT/FT)
5	4	1.3	1.5:1	2	1.5:1
10	8	1.3	1.5:1	2	1.5:1

CONSTRUCTION SPECIFICATIONS

1. SUBGRADE SHALL BE CONSTRUCTED TO THE LINES AND GRADES SHOWN ON THE PLANS. REMOVE ALL UNSUITABLE MATERIAL AND REPLACE THEM IF NECESSARY WITH COMPACTED STABLE FILL MATERIALS. SHAPE SUBGRADE TO UNIFORM SURFACE. WHERE CONCRETE IS POURED DIRECTLY ON SUBSOIL MAINTAIN IT IN A MOIST CONDITION.
2. ON FILL SLOPES THE SOIL ADJACENT TO THE CHUTE FOR A MINIMUM OF 5 FEET SHALL BE WELL COMPACTED.
3. WHERE DRAINAGE FILTERS ARE PLACED UNDER THE STRUCTURE THE CONCRETE WILL NOT BE POURED ON THE FILTER. A PLASTIC LINER, MINIMUM 4 MILS THICK, WILL BE PLACED TO PREVENT CONTAMINATION OF THE FILTER LAYER.
4. PLACE CONCRETE FOR THE FLUME TO THE THICKNESS SHOWN ON THE PLANS AND FINISH ACCORDING TO DETAILS. PROTECT FRESHLY POURED CONCRETE FROM EXTREME TEMPERATURES (HOT OR COLD) AND ENSURE PROPER CURING.
5. FORM, REINFORCE, AND POUR TOGETHER CUTOFF WALLS, ANCHOR LUGS AND CHANNEL LININGS. PROVIDE TRAVERSE JOINTS TO CONTROL CRACKING AT 20 FOOT INTERVALS. JOINTS CAN BE FORMED BY USING A 1/8 INCH THICK REMOVABLE TEMPLATE OR BY SAWING TO A MINIMUM DEPTH OF 1 INCH. FLUMES LONGER THAN 50 FEET SHALL HAVE PREFORMED EXPANSION JOINTS INSTALLED.
6. IMMEDIATELY AFTER CONSTRUCTION, ALL DISTURBED AREAS WILL BE FINAL GRADED AND SEEDED.
7. MAINTENANCE - INSPECT FLUMES AFTER EACH RAINFALL UNTIL ALL AREAS ADJOINING THE FLUME ARE PERMANENTLY STABILIZED. REPAIR ALL DAMAGE IMMEDIATELY. INSPECT OUTLET AND ROCK RIPRAP TO ASSURE PRESENCE AND STABILITY. ANY MISSING COMPONENTS SHOULD BE IMMEDIATELY REPLACED.

ADAPTED FROM DETAILS PROVIDED BY: USDA - NRCS,
NEW YORK STATE DEPARTMENT OF TRANSPORTATION,
NEW YORK STATE DEPARTMENT OF ENVIRONMENTAL CONSERVATION,
NEW YORK STATE SOIL & WATER CONSERVATION COMMITTEE

PAVED FLUME

STANDARD AND SPECIFICATIONS FOR PERIMETER DIKE/SWALE

Definition & Scope

A **temporary** ridge of soil formed by excavating an adjoining swale located along the perimeter of the site or disturbed area. Its purpose is to prevent off site storm runon from entering a disturbed area and to prevent sediment laden storm runoff from leaving the construction site or disturbed area.

Conditions Where Practice Applies

Perimeter dike/swale is constructed to divert flows from entering a disturbed area, or along tops of slopes to prevent flows from eroding the slope, or along base of slopes to direct sediment laden flows to a trapping device.

The perimeter dike/swale shall remain in place until the disturbed areas are permanently stabilized.

Design Criteria

See Figure 3.14 on page 3.36 for details.

The perimeter dike/swale shall not be constructed outside property lines or setbacks without obtaining legal easements from affected adjacent property owners. A design is not required for perimeter dike/swale. The following criteria shall be used:

Drainage area – Less than 2 acres (for drainage areas larger than 2 acres but less than 10 acres, see earth dike or construction ditch; for drainage areas larger than 10 acres, see standard and specifications for diversion).

Height – 18 inches minimum from bottom of swale to top of dike evenly divided between dike height and swale depth.

Bottom width of dike – 2 feet minimum.

Width of swale – 2 feet minimum.

Grade – Dependent upon topography, but shall have positive drainage (sufficient grade to drain) to an adequate outlet. Maximum allowable grade not to exceed 8 percent.

Stabilization – The disturbed area of the dike and swale shall be stabilized within 2 days of installation, in accordance with the standard and specifications for construction ditch (page 3.4).

Outlet

1. Perimeter dike/swale shall have a stabilized outlet.
2. Diverted runoff from a protected or stabilized upland area shall outlet directly onto an undisturbed stabilized area.
3. Diverted runoff from a disturbed or exposed upland area shall be conveyed to a sediment trapping device such as a sediment trap, sediment basin, or to an area protected by any of these practices.
4. The on-site location may need to be adjusted to meet field conditions in order to utilize the most suitable outlet.

Figure 3.14
Perimeter Dike/Swale Detail

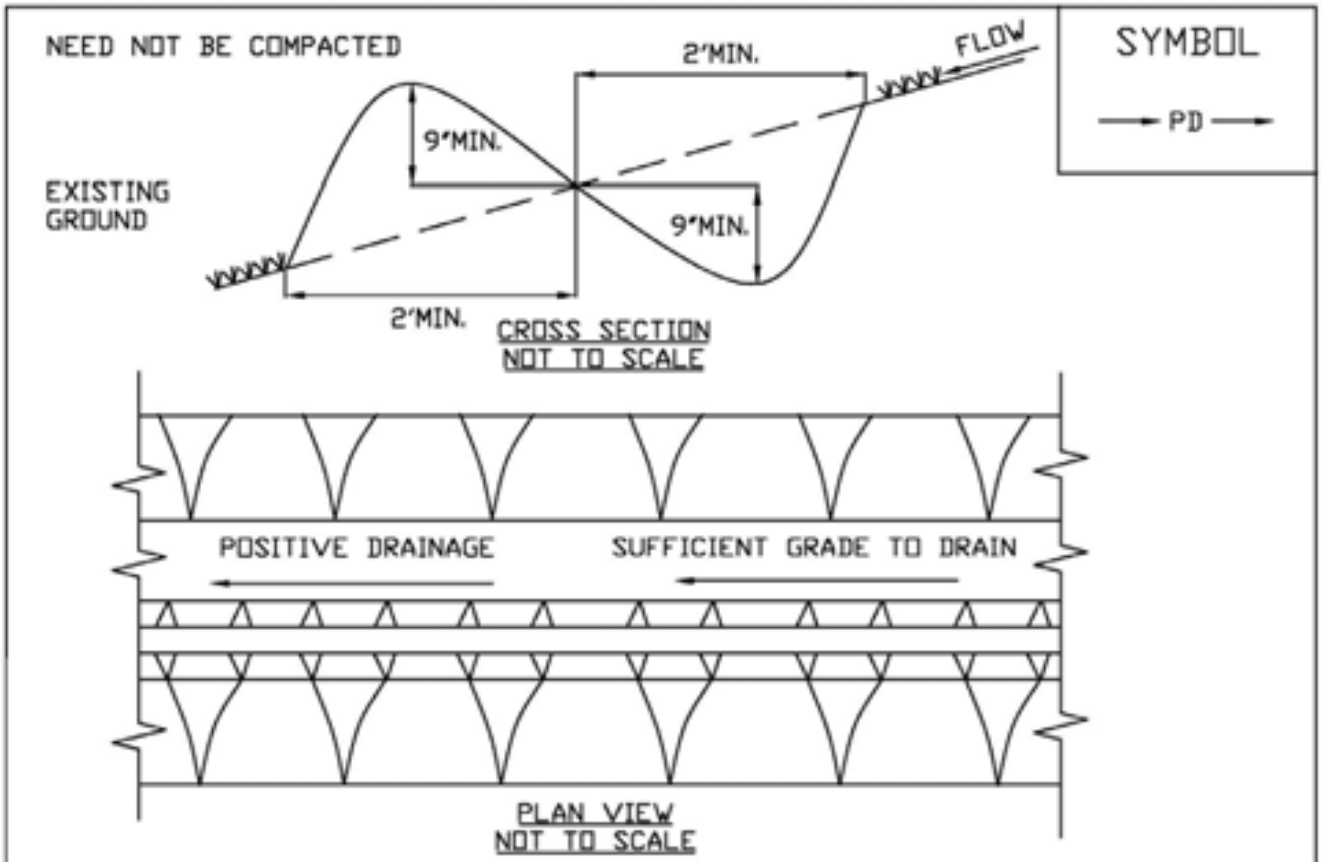

CONSTRUCTION SPECIFICATIONS

1. ALL PERIMETER DIKE/SWALE SHALL HAVE UNINTERRUPTED POSITIVE GRADE TO AN OUTLET.
2. DIVERTED RUNOFF FROM A DISTURBED AREA SHALL BE CONVEYED TO A SEDIMENT TRAPPING DEVICE.
3. DIVERTED RUNOFF FROM AN UNDISTURBED AREA SHALL OUTLET INTO AN UNDISTURBED STABILIZED AREA AT NON-EROSIVE VELOCITY.
4. THE SWALE SHALL BE EXCAVATED OR SHAPED TO LINE GRADE, AND CROSS SECTION AS REQUIRED TO MEET THE CRITERIA SPECIFIED IN THE STANDARD.
5. STABILIZATION OF THE AREA DISTURBED BY THE DIKE AND SWALE SHALL BE DONE IN ACCORDANCE WITH THE STANDARD AND SPECIFICATIONS FOR TEMPORARY SEEDING AND MULCHING, AND SHALL BE DONE WITHIN 2 DAYS.
6. PERIODIC INSPECTION AND REQUIRED MAINTENANCE MUST BE PROVIDED AFTER EACH RAIN EVENT.

MAX. DRAINAGE AREA LIMIT: 2 ACRES

ADAPTED FROM DETAILS PROVIDED BY: USDA - NRCS,
NEW YORK STATE DEPARTMENT OF TRANSPORTATION,
NEW YORK STATE DEPARTMENT OF ENVIRONMENTAL CONSERVATION,
NEW YORK STATE SOIL & WATER CONSERVATION COMMITTEE

PERIMETER DIKE OR SWALE

STANDARD AND SPECIFICATIONS FOR PIPE SLOPE DRAIN

Definition & Scope

A **temporary** structure placed from the top of a slope to the bottom of a slope to convey surface runoff down slopes without causing erosion.

Conditions Where Practice Applies

Pipe slope drains are used where concentrated flow of surface runoff must be conveyed down a slope in order to prevent erosion. The maximum allowable drainage area shall be 3.5 acres.

Design Criteria

See Figure 3.15 on page 3.38 for details.

General

Size	Pipe/Tubing Diameter (in.)	Maximum Drainage Area (Ac.)
PSD-12	12	0.5
PSD-18	18	1.5
PSD-21	21	2.5
PSD-24	24	3.5

Inlet

The minimum height of the containment dike at the entrance to the pipe slope drain shall be the diameter of the pipe (D) plus 12 inches.

Outlet

The pipe slope drain shall outlet into a sediment trapping device when the drainage area is disturbed. A riprap apron shall be installed at all pipe outlet locations where water is being discharged.

Construction Specifications

1. The pipe slope drain shall have a slope of 3 percent or steeper.
2. The top of the containment dike over the inlet pipe, and those dikes carrying water to the pipe, shall be at least one (1) foot higher at all points than the top of the inlet pipe.
3. Corrugated plastic pipe or equivalent shall be used with watertight connecting bands.
4. A flared end section shall be attached to the inlet end of pipe with a watertight connection.
5. The soil around and under the pipe and end section shall be hand tamped in 4 in. lifts to the top of the earth dike.
6. Where flexible tubing is used, it shall be the same diameter as the inlet pipe and shall be constructed of a durable material with hold down grommets spaced 10 ft. on centers.
7. The flexible tubing shall be securely fastened to the corrugated plastic pipe with metal strapping or watertight connecting collars.
8. The flexible tubing shall be securely anchored to the slope by staking at the grommets provided.
9. Where a pipe slope drain outlets into a sediment trapping device, it shall discharge at the riser crest or weir elevation.
10. A riprap apron shall be used at all pipe outlet locations. See Figure 3.15 on page 3.38 .
11. Inspection and any needed maintenance shall be performed after each storm event.

Figure 3.15
Pipe Slope Drain Detail

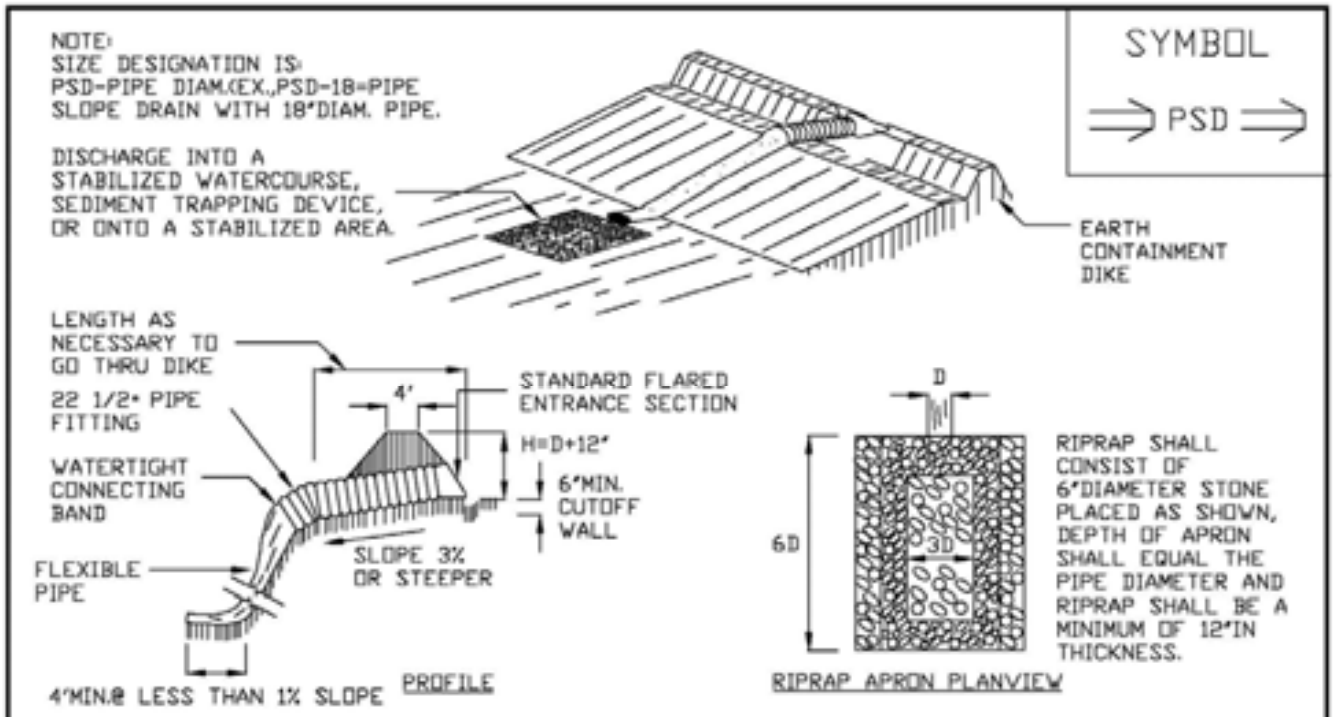

CONSTRUCTION SPECIFICATIONS

1. THE INLET PIPE SHALL HAVE A SLOPE OF 3% OR STEEPER.
2. THE TOP OF THE EARTH DIKE OVER THE INLET PIPE AND THOSE DIKES CARRYING WATER TO THE PIPE SHALL BE AT LEAST 1' HIGHER AT ALL POINTS THAN THE TOP OF THE INLET PIPE.
3. THE INLET PIPE SHALL BE CORRUGATED PIPE WITH WATERTIGHT CONNECTING BANDS.
4. THE FLEXIBLE TUBING SHALL BE THE SAME DIAMETER AS THE INLET PIPE AND SHALL BE CONSTRUCTED OF A DURABLE MATERIAL WITH HOLD-DOWN GROMMETS SPACED AT 10' ON CENTER.
5. THE FLEXIBLE TUBING SHALL BE SECURELY FASTENEND TO THE CORRUGATED PIPE WITH METAL STRAPPING OR WATERTIGHT CONNECTING COLLARS.
6. THE FLEXIBLE TUBING SHALL BE SECURELY ANCHORED TO THE SLOPE BY STAKING AT THE GROMMETS PROVIDED.
7. A RIPRAP APRON SHALL BE PROVIDED AT THE OUTLET. THIS SHALL CONSIST OF 6"DIAMETER STONE PLACED AS SHOWN.
8. THE SOIL AROUND AND UNDER INLET PIPE AND ENTRANCE SECTION SHALL BE HAND TAMPED IN 4"LIFTS TO THE TOP OF EARTH DIKE.
9. FOLLOW-UP INSPECTION AND ANY NEEDED MAINTENANCE SHALL BE PERFORMED AFTER EACH STORM EVENT.

* DRAINAGE AREA MUST NOT EXCEED 3.5 ACRES.

ADAPTED FROM DETAILS PROVIDED BY: USDA - NRCS, NEW YORK STATE DEPARTMENT OF TRANSPORTATION, NEW YORK STATE DEPARTMENT OF ENVIRONMENTAL CONSERVATION, NEW YORK STATE SOIL & WATER CONSERVATION COMMITTEE	PIPE SLOPE DRAIN

STANDARD AND SPECIFICATIONS FOR ROCK OUTLET PROTECTION

Definition & Scope

A **permanent** section of rock protection placed at the outlet end of the culverts, conduits, or channels to reduce the depth, velocity, and energy of water, such that the flow will not erode the receiving downstream reach.

Conditions Where Practice Applies

This practice applies where discharge velocities and energies at the outlets of culverts, conduits, or channels are sufficient to erode the next downstream reach. This applies to:

1. Culvert outlets of all types.
2. Pipe conduits from all sediment basins, dry storm water ponds, and permanent type ponds.
3. New channels constructed as outlets for culverts and conduits.

Design Criteria

The design of rock outlet protection depends entirely on the location. Pipe outlet at the top of cuts or on slopes steeper than 10 percent, cannot be protected by rock aprons or riprap sections due to re-concentration of flows and high velocities encountered after the flow leaves the apron.

Many counties and state agencies have regulations and design procedures already established for dimensions, type and size of materials, and locations where outlet protection is required. Where these requirements exist, they shall be followed.

Tailwater Depth

The depth of tailwater immediately below the pipe outlet must be determined for the design capacity of the pipe. If the tailwater depth is less than half the diameter of the outlet pipe, and the receiving stream is wide enough to accept divergence of the flow, it shall be classified as a Minimum Tailwater Condition; see Figure 3.16 on page 3.42 as an example. If the tailwater depth is greater than half the pipe diameter and the receiving stream will continue to confine the flow, it shall be classified as a Maximum Tailwater Condition; see Figure 3.17 on page 3.43 as an example. Pipes which outlet onto flat areas with no defined channel may be assumed to have a Minimum Tailwater Condition; see Figure 3.16 on page 3.42 as an example.

Apron Size

The apron length and width shall be determined from the curves according to the tailwater conditions:

Minimum Tailwater – Use Figure 3.16 on page 3.42
Maximum Tailwater – Use Figure 3.17 on page 3.43

If the pipe discharges directly into a well defined channel, the apron shall extend across the channel bottom and up the channel banks to an elevation one foot above the maximum tailwater depth or to the top of the bank, whichever is less.

The upstream end of the apron, adjacent to the pipe, shall have a width two (2) times the diameter of the outlet pipe, or conform to pipe end section if used.

Bottom Grade

The outlet protection apron shall be constructed with no slope along its length. There shall be no overfall at the end of the apron. The elevation of the downstream end of the apron shall be equal to the elevation of the receiving channel or adjacent ground.

Alignment

The outlet protection apron shall be located so that there are no bends in the horizontal alignment.

Materials

The outlet protection may be done using rock riprap, grouted riprap, or gabions. Outlets constructed on the bank of a stream or wetland shall not use grouted rip-rap, gabions or concrete.

Riprap shall be composed of a well-graded mixture of rock size so that 50 percent of the pieces, by weight, shall be larger than the d_{50} size determined by using the charts. A

well-graded mixture, as used herein, is defined as a mixture composed primarily of larger rock sizes, but with a sufficient mixture of other sizes to fill the smaller voids between the rocks. The diameter of the largest rock size in such a mixture shall be 1.5 times the d_{50} size.

Thickness

The minimum thickness of the riprap layer shall be 1.5 times the maximum rock diameter for d_{50} of 15 inches or less; and 1.2 times the maximum rock size for d_{50} greater than 15 inches. The following chart lists some examples:

D_{50} (inches)	d_{max} (inches)	Minimum Blanket Thickness (inches)
4	6	9
6	9	14
9	14	20
12	18	27
15	22	32
18	27	32
21	32	38
24	36	43

Rock Quality

Rock for riprap shall consist of field rock or rough unhewn quarry rock. The rock shall be hard and angular and of a quality that will not disintegrate on exposure to water or weathering. The specific gravity of the individual rocks shall be at least 2.5.

Filter

A filter is a layer of material placed between the riprap and the underlying soil surface to prevent soil movement into and through the riprap. Riprap shall have a filter placed under it in all cases.

A filter can be of two general forms: a gravel layer or a plastic filter cloth. The plastic filter cloth can be woven or non-woven monofilament yarns, and shall meet these base requirements: thickness 20-60 mils, grab strength 90-120 lbs; and shall conform to ASTM D-1777 and ASTM D-1682.

Gravel filter blanket, when used, shall be designed by comparing particle sizes of the overlying material and the base material. Design criteria are available in Standard and Specification for Anchored Slope and Channel Stabilization on page 4.7.

Gabions

Gabions shall be made of hexagonal triple twist mesh with heavily galvanized steel wire. The maximum linear dimension of the mesh opening shall not exceed 4 ½ inches and the area of the mesh opening shall not exceed 10 square inches.

Gabions shall be fabricated in such a manner that the sides, ends, and lid can be assembled at the construction site into a rectangular basket of the specified sizes. Gabions shall be of single unit construction and shall be installed according to manufacturer's recommendations.

The area on which the gabion is to be installed shall be graded as shown on the drawings. Foundation conditions shall be the same as for placing rock riprap, and filter cloth shall be placed under all gabions. Where necessary, key, or tie, the structure into the bank to prevent undermining of the main gabion structure.

Maintenance

Once a riprap outlet has been installed, the maintenance needs are very low. It should be inspected after high flows for evidence of scour beneath the riprap or for dislodged rocks. Repairs should be made immediately.

Design Procedure

1. Investigate the downstream channel to assure that nonerosive velocities can be maintained.

2. Determine the tailwater condition at the outlet to establish which curve to use.

3. Use the appropriate chart with the design discharge to determine the riprap size and apron length required. It is noted that references to pipe diameters in the charts are based on full flow. For other than full pipe flow, the parameters of depth of flow and velocity must be used to adjust the design discharges.

4. Calculate apron width at the downstream end if a flare section is to be employed.

Design Examples are demonstrated in Appendix B.

Construction Specifications

1. The subgrade for the filter, riprap, or gabion shall be prepared to the required lines and grades. Any fill required in the subgrade shall be compacted to a density of approximately that of the surrounding undisturbed material.

2. The rock or gravel shall conform to the specified grad-

ing limits when installed respectively in the riprap or filter.

3. Filter cloth shall be protected from punching, cutting, or tearing. Any damage other than an occasional small hole shall be repaired by placing another piece of cloth over the damaged part or by completely replacing the cloth. All overlaps, whether for repairs or for joining two pieces of cloth shall be a minimum of one foot.

4. Rock for the riprap or gabion outlets may be placed by equipment. Both shall each be constructed to the full course thickness in one operation and in such a manner as to avoid displacement of underlying materials. The rock for riprap or gabion outlets shall be delivered and placed in a manner that will ensure that it is reasonably homogenous with the smaller rocks and spalls filling the voids between the larger rocks. Riprap shall be placed in a manner to prevent damage to the filter blanket or filter cloth. Hand placement will be required to the extent necessary to prevent damage to the permanent works.

Figure 3.16
Outlet Protection Design—Minimum Tailwater Condition Chart (Design of Outlet Protection from a Round Pipe Flowing Full, Minimum Tailwater Condition: $T_w < 0.5D_o$) (USDA - NRCS)

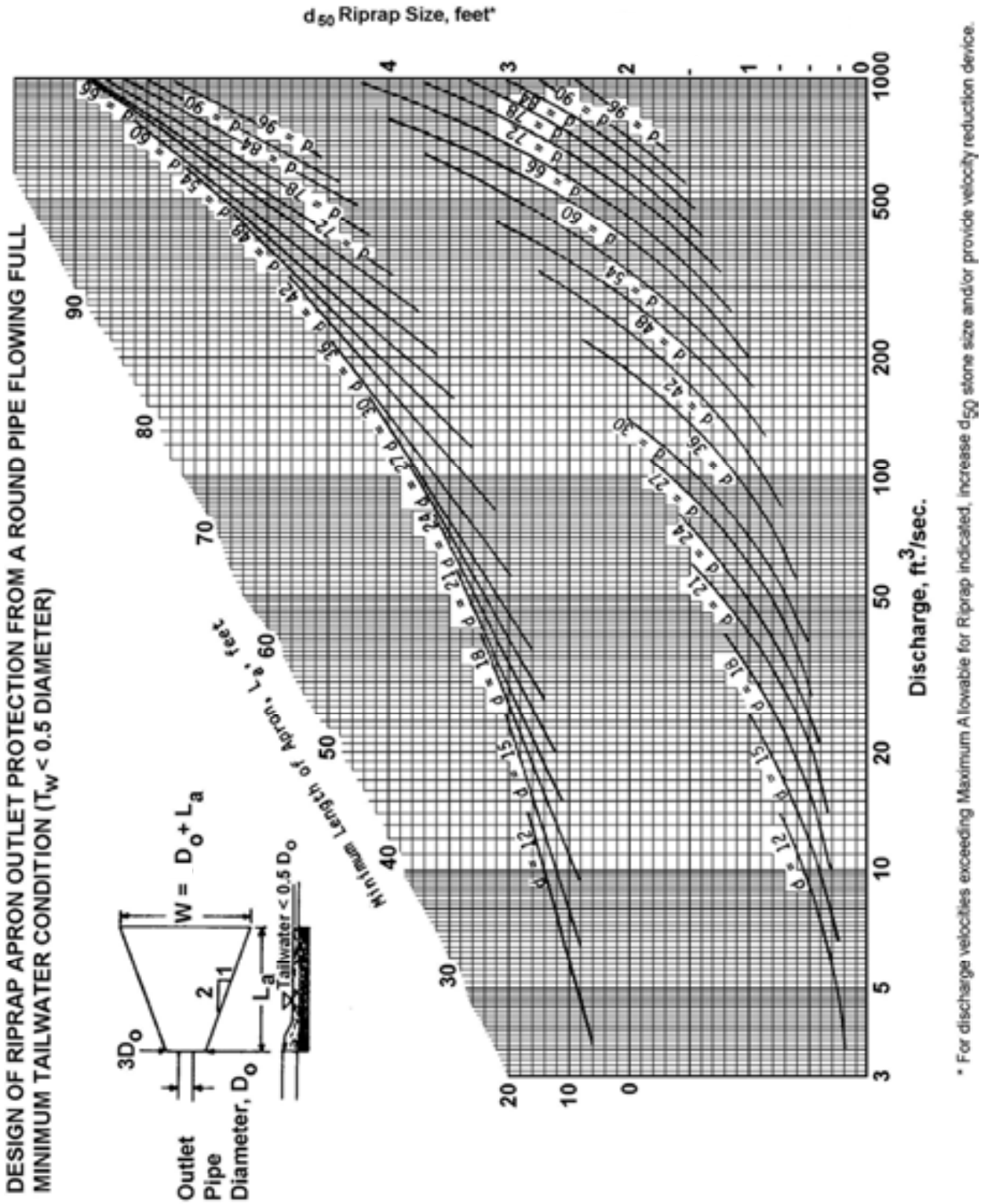

Figure 3.17
Outlet Protection Design—Maximum Tailwater Condition Chart (Design of Outlet Protection from a Round Pipe Flowing Full, Maximum Tailwater Condition: $T_w \geq 0.5D_o$) (USDA - NRCS)

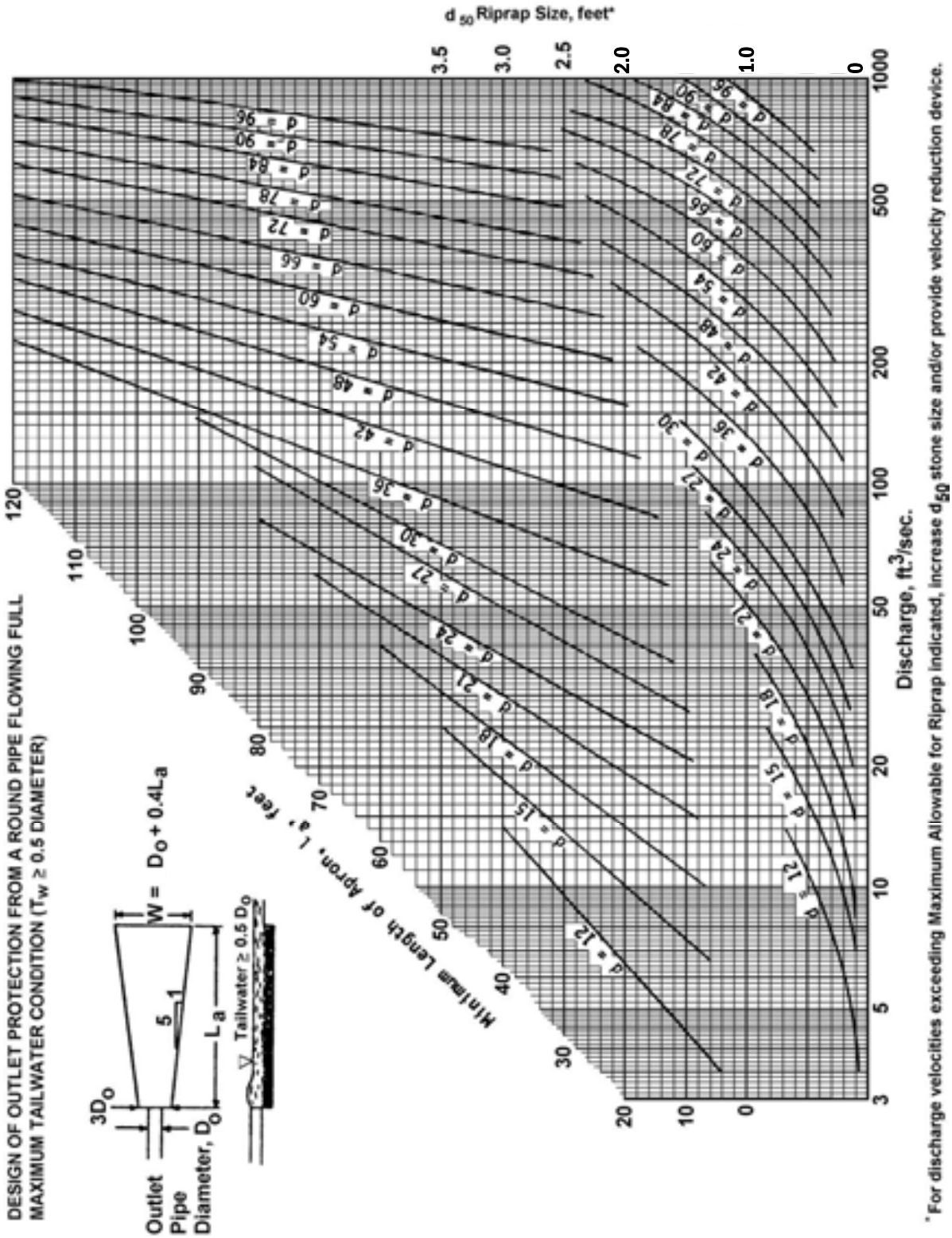

Figure 3.18
Riprap Outlet Protection Detail (1)

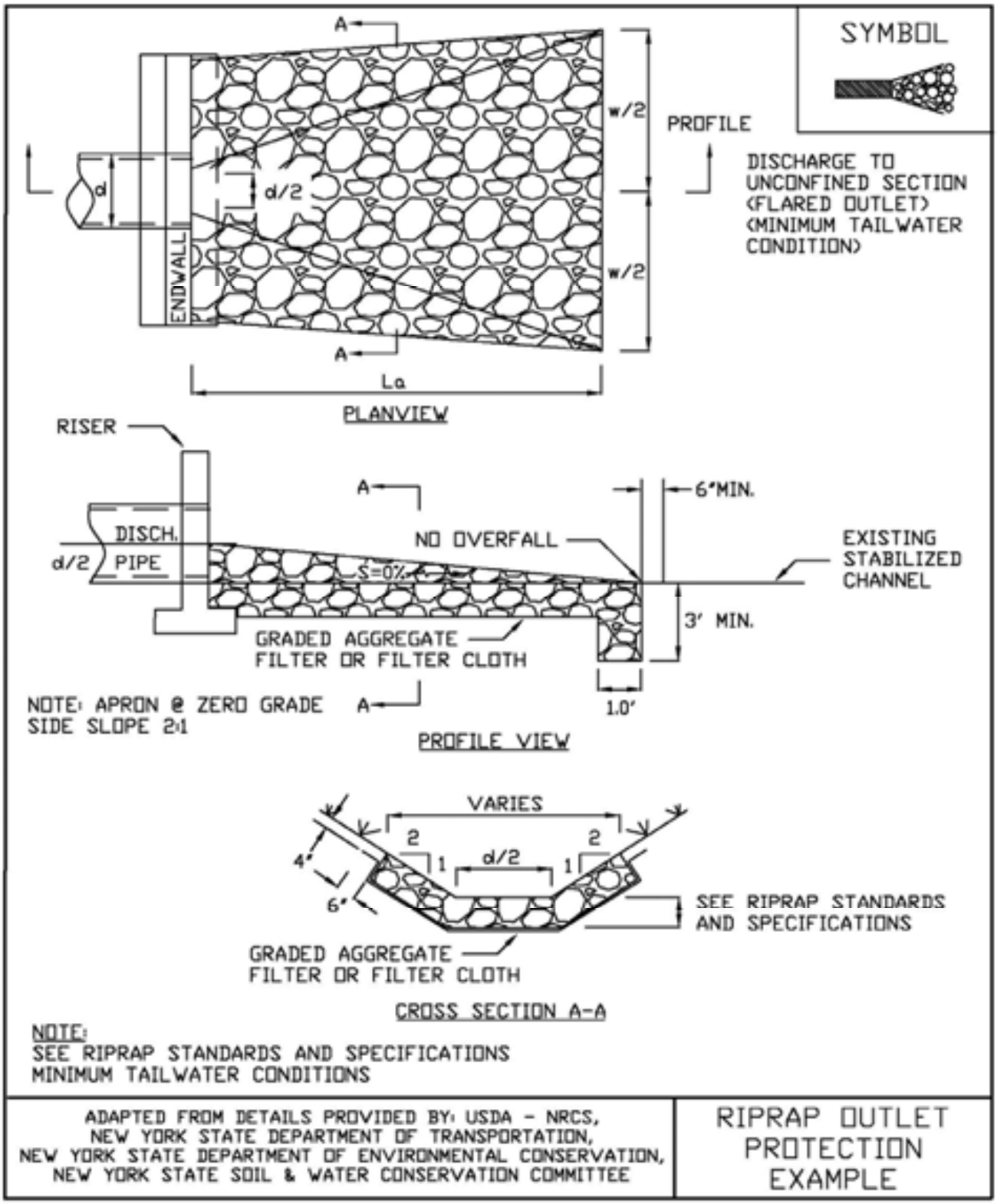

Figure 3.19
Riprap Outlet Protection Detail (2)

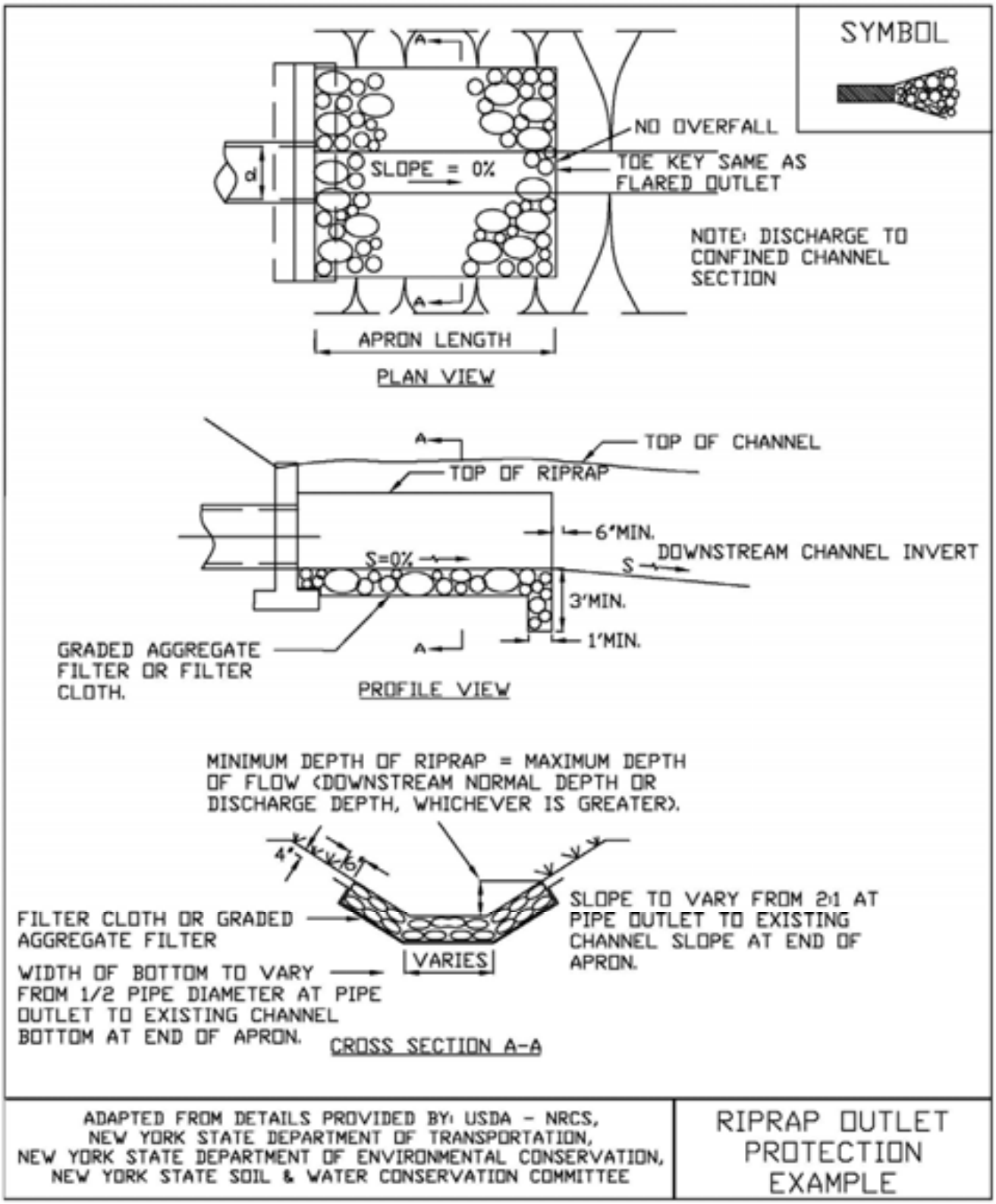

Figure 3.20
Riprap Outlet Protection Detail (3)

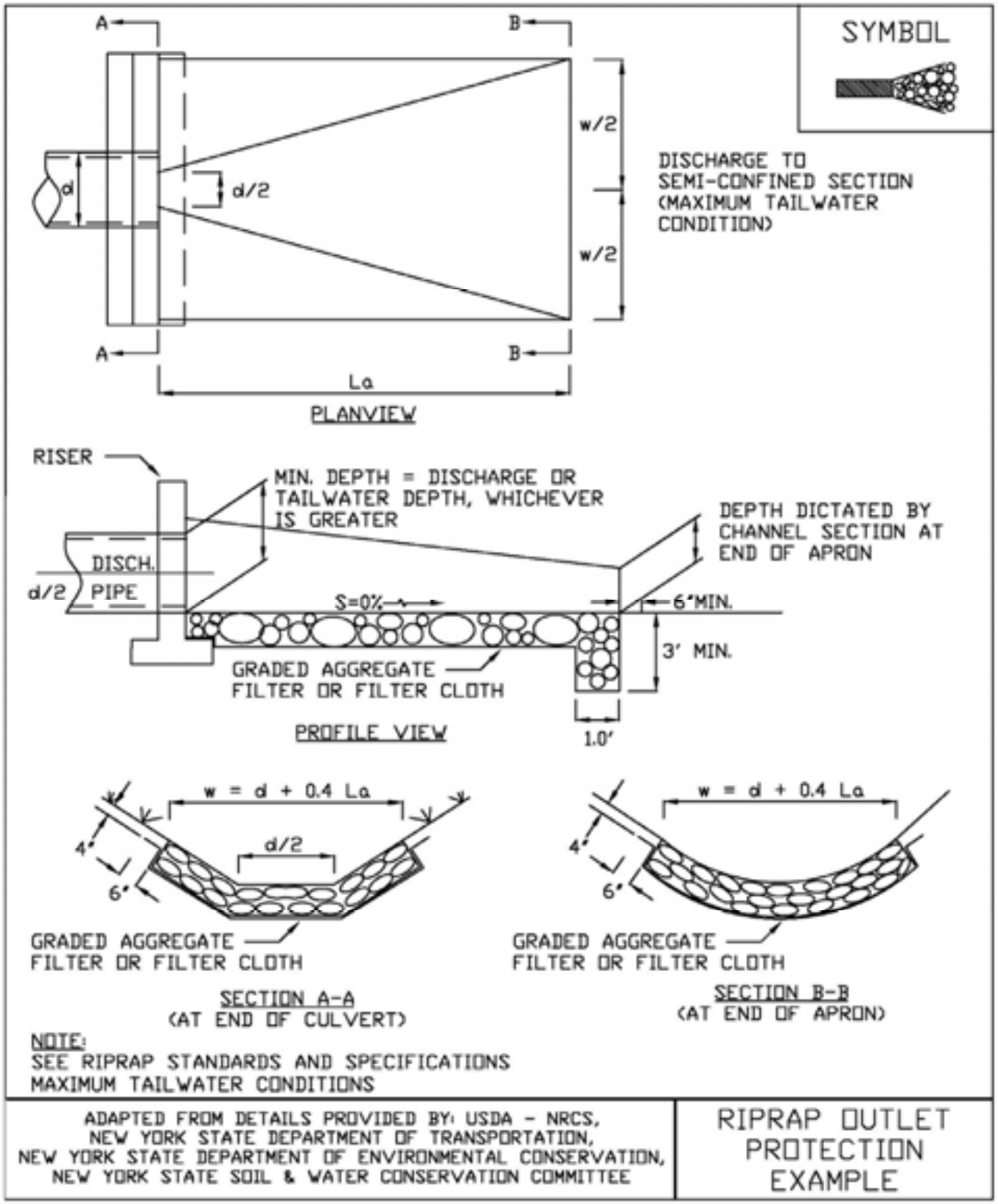

STANDARD AND SPECIFICATIONS FOR STORM DRAIN DIVERSION

Definition & Scope

The **temporary** redirection of a storm drain line or outfall channel so that it may discharge into a sediment trapping device in order to prevent sediment laden water from entering a watercourse, public or private property through a storm drain system. This could either be above ground or an underground conveyance system to convey sediment laden water to a sediment trapping device.

Conditions Where Practice Applies

One of the following practices or procedures shall be used whenever the off-site drainage area is less than 50 percent of the on-site drainage area to that system. A special exception may be given, at the discretion of the local plan approval agency, where site conditions make this procedure impossible.

Method of Temporary Diversion

1. Construction of a sediment trap or basin below a permanent storm drain outfall. Temporarily diverts storm flow into the basin or trap constructed below permanent outfall channel.

2. In-line diversion of storm drain at an inlet or manhole, achieved by installing a pipe stub in the side of a manhole or inlet and temporarily blocking the permanent outfall pipe from that structure. A temporary outfall ditch or pipe may be used to convey storm flow from the stub to a sediment trap or basin. This method may be used just above a permanent outfall or prior to connecting into an existing storm drain system.

3. Delay completion of the permanent storm drain outfall and temporarily divert storm flow into a sediment basin or trap. Earth dike, swale or design diversion is used, depending on the drainage area, to direct flow into a sediment basin or trap. The basin or trap should be constructed to one side of the proposed permanent storm drain location whenever possible.

4. Installation of a stormwater management basin early in the construction sequence. Install temporary measures to allow use of this site as a sediment basin. Since these structures are designed to receive storm drain outfalls, diversion should not be necessary.

Completion and Disposition

When the areas contributing sediment to the system have been stabilized, procedures can be taken to restore the system to its planned use.

The following removal and restoration procedure is recommended:

1. Flush the storm drain system to remove any accumulated sediment.

2. Remove the sediment control devices, such as traps, basins, dikes, swales, etc.

3. For sites where an inlet was modified, brick and grout shut the temporary pipe stub and open the permanent outfall pipe.

4. Establish permanent stabilized outfall channel as noted on the plans.

5. Restore the area to grades shown on the plan and stabilize with vegetative measures.

6. For basins that will be incorporated into stormwater management facilities, remove the accumulated sediment, construct the stormwater facility as designed, and seed all disturbed areas to permanent vegetation.

STANDARD AND SPECIFICATIONS FOR SUBSURFACE DRAIN

Definition & Scope

A **permanent** conduit, such as tile, pipe, or tubing, installed beneath the ground surface, which intercepts, collects, and/or conveys drainage water to serve one or more of the following purposes:

1. Improve the environment for vegetative growth by regulating the water table and groundwater flow.
2. Intercept and prevent water movement into a wet area.
3. Relieve artesian pressures.
4. Remove surface runoff.
5. Provide internal drainage of slopes to improve their stability and reduce erosion.
6. Provide internal drainage behind bulkheads, retaining walls, etc.
7. Replace existing subsurface drains that are interrupted or destroyed by construction operations.
8. Provide subsurface drainage for dry storm water management structures.
9. Improve dewatering of sediment in sediment basins. (See Standard and Specification for Sediment Basins in Section 5).

Conditions Where Practice Applies

Subsurface drains are used in areas having a high water table or where subsurface drainage is required. The soil shall have enough depth and permeability to permit installation of an effective system. This standard does not apply to storm drainage systems or foundation drains. Regulatory restrictions may apply if wetlands are present.

An outlet for the drainage system shall be available, either by gravity flow or by pumping. The outlet shall be adequate for the quantity of water to be discharged without causing damage above or below the point of discharge and shall comply with all state and local laws.

Design Criteria

The design and installation shall be based on adequate surveys and on-site soils investigations.

Required Capacity of Drains

The required capacity shall be determined by one or more of the following:

1. Where sub-surface drainage is to be uniform over an area through a systematic pattern of drains, a drainage coefficient of 1 inch to be removed in 24 hours shall be used; see Drain Chart, Figure 3.21 on page 3.51.
2. Where sub-surface drainage is to be by a random interceptor system, a minimum inflow rate of 0.5 cfs per 1,000 feet of line shall be used to determine the required capacity. If actual field tests and measurements of flow amounts are available, they may be used for determining capacity.

   For interceptor subsurface drains on sloping land, increase the inflow rate as follows:

Land Slope	Increase Inflow Rate By
2-5 percent	10 percent
5-12 percent	20 percent
Over 12 percent	30 percent

3. Additional design capacity must be provided if surface water is allowed to enter the system.

Size of Subsurface Drain

The size of subsurface drains shall be determined from the drain chart found on Figures 3.21 on page 3.51. All subsurface drains shall have a nominal diameter, which equals or exceeds four (4) inches.

Depth and Spacing

The minimum depth of cover of subsurface drains shall be 24 inches where possible. The minimum depth of cover may be reduced to 15 inches where it is not possible to attain the 24 inch depth and where the drain is not subject to equipment loading or frost action. Roots from some types of vegetation can plug drains, as the drains get closer to the surface.

The spacing of drain laterals will be dependent on the permeability of the soil, the depth of installation of the drains and degree of drainage required. Generally, drains installed 36 inches deep and spaced 50 feet center-to-center will be adequate. For more specific information, see the New York Drainage Guide (USDA-NRCS).

Minimum Velocity and Grade

The minimum grade for subsurface drains shall be 0.10 percent. Where surface water enters the system a velocity of not less than 2 feet per second shall be used to establish the minimum grades. Provisions shall be made for preventing debris or sediment from entering the system by means of filters or collection and periodic removal of sediment from installed traps.

Materials for Subsurface Drains

Acceptable subsurface drain materials include perforated, continuous closed joint conduits of polyethylene plastic, concrete, corrugated metal, polyvinyl chloride, and clay tile.

The conduit shall meet strength and durability requirements of the site.

Loading

The allowable loads on subsurface drain conduits shall be based on the trench and bedding conditions specified for the job. A factor of safety of not less than 1.5 shall be used in computing the maximum allowable depth of cover for a particular type of conduit.

Envelopes and Envelope Materials

Envelopes shall be used around subsurface drains for proper bedding and to provide better flow into the conduit. Not less than three inches of envelope material shall be used for sand/gravel envelopes. Where necessary to improve the characteristics of flow of groundwater into the conduit, more envelope material may be required.

Where county regulations do not allow sand/gravel envelopes, but require a special type and size of envelope material, they shall be followed.
Envelope material shall be placed to the height of the uppermost seepage strata. Behind bulkheads and retaining walls, it shall go to within twelve inches of the top of the structure. This standard does not cover the design of filter materials where needed.

Materials used for envelopes shall not contain materials which will cause an accumulation of sediment in the conduit or render the envelope unsuitable for bedding of the conduit. Envelope materials shall consist of either filter cloth or sand/gravel material, which shall pass a 1 ½ inch sieve, 90 to 100 percent shall pass a ¾ inch sieve, and not more than 10 percent shall pass a No. 60 sieve.

Filter cloth envelope can be either woven or non-woven monofilament yarns and shall have a sieve opening ranging from 40 to 80. The envelope shall be placed in such a manner that once the conduit is installed, it shall completely encase the conduit.

The conduit shall be placed and bedded in a sand/gravel envelope. A minimum of three inches depth of envelope materials shall be placed on the bottom of a conventional trench. The conduit shall be placed on this and the trench completely filled with envelope material to minimum depth of 3 inches above the conduit.

Soft or yielding soils under the drain shall be stabilized where required and lines protected from settlement by adding gravel or other suitable material to the trench, by placing the conduit on plank or other rigid support, or by using long sections of perforated or watertight pipe with adequate strength to ensure satisfactory subsurface drain performance.

Use of Heavy Duty Corrugated Plastic Drainage Tubing

Heavy duty corrugated drainage tubing shall be specified where rocky or gravelly soils are expected to be encountered during installation operations. The quality of tubing will also be specified when cover over this tubing is expected to exceed 24 inches for 4, 5, 6, or 8 inch tubing. Larger size tubing designs will be handled on an individual job basis.

Auxiliary Structure and Subsurface Drain Protection

The outlet shall be protected against erosion and undermining of the conduit, against damaging periods of submergence, and against entry of rodents or other animals into the subsurface drain. An animal guard shall be installed on the outlet end of the pipe. A swinging animal guard shall be used if surface water enters the pipe.

A continuous 10-foot section of corrugated metal, cast iron, polyvinyl chloride, or steel pipe without perforations shall be used at the outlet end of the line and shall outlet 1.0 foot above the normal elevation of low flow in the outlet ditch or

above mean high tide in tidal areas. No envelope material shall be used around the 10-foot section of pipe. Two-thirds of the pipe shall be buried in the ditch bank and the cantilevered section shall extend to a point above the toe of the ditch side slope. If not possible, the side slope shall be protected from erosion.

Conduits under roadways and embankments shall be water-tight and designed to exclude debris and prevent sediment from entering the conduit. Lines flowing under pressure shall be designed to withstand the resulting pressures and velocity of flow. Surface waterways shall be used where feasible.

The upper end of each subsurface drain line shall be capped with a tight fitting cap of the same material as the conduit or other durable material unless connected to a structure.

Construction Specifications

1. Deformed, warped, or otherwise damaged pipe or tubing shall not be used.

2. All subsurface drains shall be laid to a uniform line and covered with envelope material. The pipe or tubing shall be laid with the perforations down and oriented symmetrically about the vertical centerline. Connections will be made with manufactured appurtenances comparable in strength with the specified pipe or tubing unless otherwise specified. The method of placement and bedding shall be as specified on the drawing.

3. Envelope material shall consist of filter cloth or a sand/gravel (which shall pass the 1 ½ inch sieve, 90 to 100 percent shall pass ¾ inch sieve, and not more than 10 percent shall pass the No. 60 sieve).

4. The upper end of each subsurface drain line shall be capped with a tight fittings cap of the same material as the conduit or other durable material unless connected to a structure.

5. A continuous 10-foot section of corrugated metal, cast iron, polyvinyl chloride, or steel pipe without perforations shall be used at the outlet end of the line. No envelope material shall be used around the 10-foot section of the pipe. An animal guard shall be installed on the outlet end of the pipe.

6. Earth backfill material shall be placed in the trench in such a manner that displacement of the drain will not occur.

7. Where surface water is entering the system, the pipe outlet section of the system shall contain a swing type trash and animal guard.

Figure 3.21
Drain Chart - Corrugated Plastic Drain Tubing (USDA-NRCS)

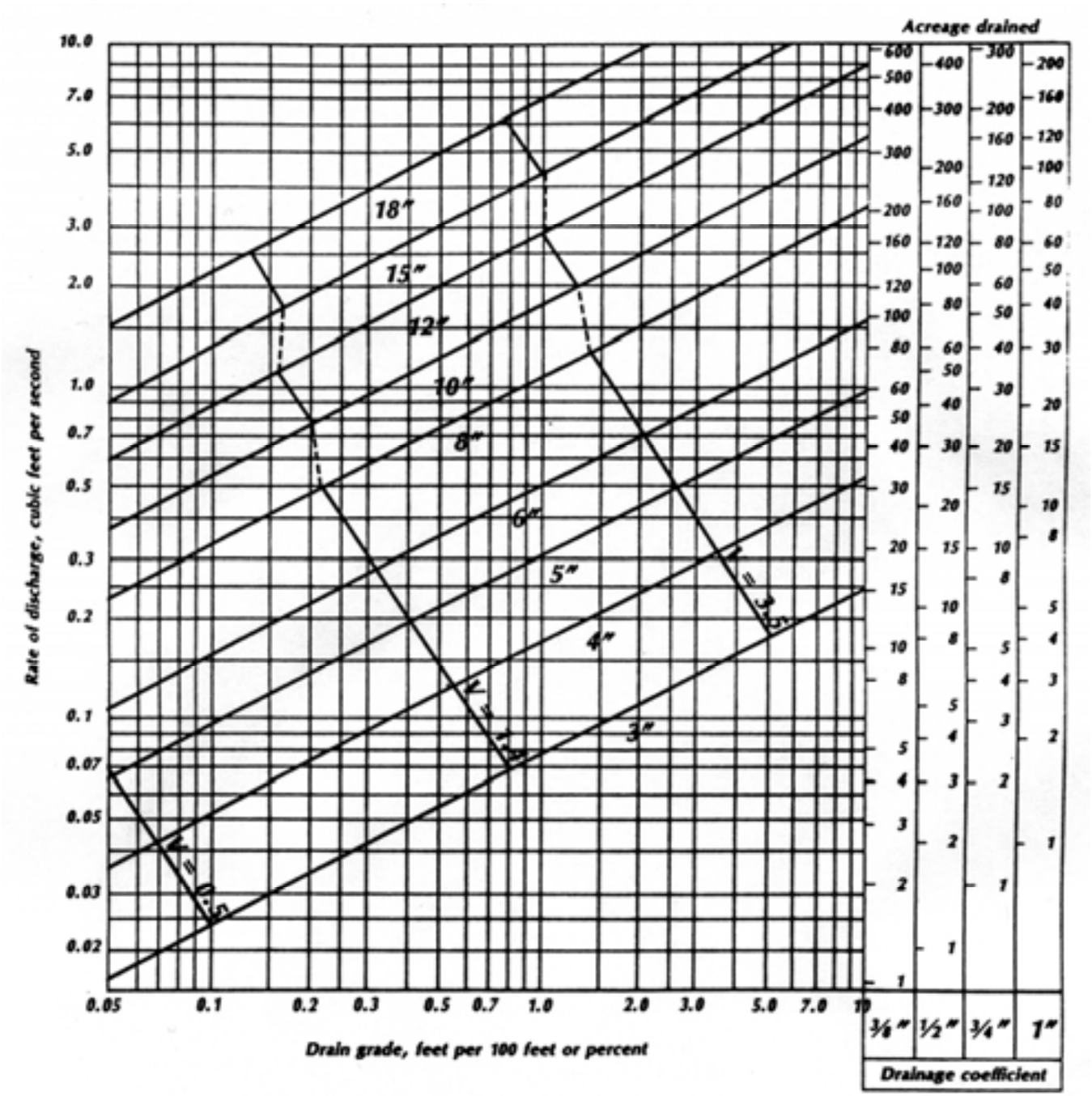

STANDARD AND SPECIFICATIONS FOR WATER BAR

Definition & Scope

A **permanent** or **temporary** ridge, ridge and channel, a structural channel, or flow deflector, constructed diagonally across a sloping road or utility right-of-way that is subject to erosion to limit the accumulation of erosive velocity of water by diverting surface runoff at pre-designed intervals.

Conditions Where Practice Applies

Where runoff protection is needed to prevent erosion from increased concentrated flow on narrow, steep access roads, driveways, and entrance ways to lot parcels as well as utility access right-of-ways generally up to 100 feet in width

Design Criteria

Design computations are not required.

1. The design height shall be minimum of 12 inches measured from channel bottom to ridge top.
2. The side slopes shall be 2:1 or flatter, a minimum of 4:1 where vehicles cross.
3. The base width of the ridge shall be six feet minimum.
4. The spacing of the water bars shall be as follows (Site spacing may need to be adjusted for field conditions to use the most suitable areas for water disposal):

Slope (%)	Spacing (ft.)
<5	125
5 TO 10	100
10 TO 20	75
20 TO 35	50
>35	25

5. The positive grade of the water bar shall not exceed 2%. A crossing angle of approximately 60 degrees is preferred.
6. Once diverted, water must be conveyed to a stable system (i.e. vegetated swale or storm sewer system). Water bars should have stable, unrestricted outlets, either natural or constructed.

See Figure 3.22 on page 3.53 for details.

Figure 3.22
Water Bar Detail

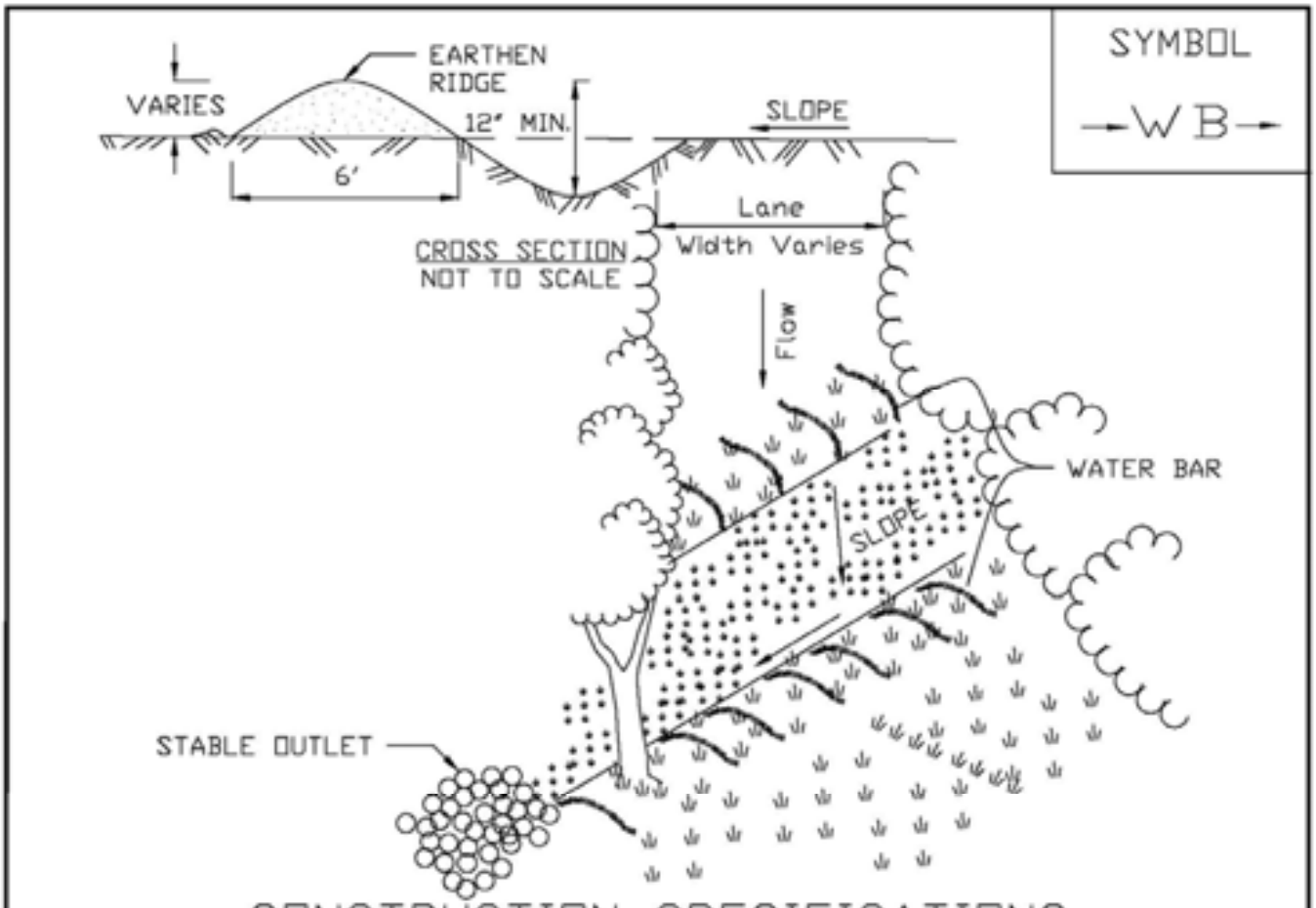

CONSTRUCTION SPECIFICATIONS

1. INSTALL THE WATER BAR AS SOON AS THE RIGHT OF WAY IS CLEARED AND GRADED.
2. DISK OR STRIP THE SOD FROM THE BASE FOR THE CONSTRUCTED RIDGE BEFORE PLACING FILL.
3. TRACK THE RIDGE TO COMPACT IT TO THE DESIGN CROSS SECTION.
4. THE UNRESTRICTED OUTLET SHALL BE LOCATED ON AN UNDISTURBED AREA. FIELD SPACING WILL BE ADJUSTED TO USE THE MOST STABLE OUTLET AREAS. OUTLET PROTECTION WILL BE PROVIDED WHEN NATURAL AREAS ARE NOT ADEQUATE.
5. VEHICLE CROSSING SHALL BE STABILIZED WITH GRAVEL. EXPOSED AREAS SHALL BE SEEDED AND MULCHED WITHIN 2 DAYS.
6. PERIODICALLY INSPECT WATER BARS FOR EROSION DAMAGE AND SEDIMENT. CHECK OUTLET AREAS AND MAKE REPAIRS AS NEEDED TO RESTORE OPERATION.

ADAPTED FROM DETAILS PROVIDED BY: USDA - NRCS, NEW YORK STATE DEPARTMENT OF TRANSPORTATION, NEW YORK STATE DEPARTMENT OF ENVIRONMENTAL CONSERVATION, NEW YORK STATE SOIL & WATER CONSERVATION COMMITTEE	WATER BARS