Department of Environmental Conservation

Division of Environmental Remediation

Record of Decision

GE Hudson Falls Plant Site
Operable Units No. 2A - 2D

Village of Hudson Falls
Town of Kingsbury
Washington County, New York
Site Number 5-58-013

March 2004

New York State Department of Environmental Conservation
GEORGE E. PATAKI, *Governor* ERIN M. CROTTY, *Commissioner*

DECLARATION STATEMENT - RECORD OF DECISION

GE Hudson Falls Plant Site Inactive Hazardous Waste Disposal Site
Operable Units No. 2A - 2D
Village of Hudson Falls, Town of Kingsbury, Washington County, New York
Site No. 5-58-013

Statement of Purpose and Basis

The Record of Decision (ROD) presents the selected remedy for Operable Units 2A - 2D of the GE Hudson Falls Plant site, a Class 2 inactive hazardous waste disposal site. The selected remedial program was chosen in accordance with the New York State Environmental Conservation Law and is not inconsistent with the National Oil and Hazardous Substances Pollution Contingency Plan of March 8, 1990 (40CFR300), as amended.

This decision is based on the Administrative Record of the New York State Department of Environmental Conservation (NYSDEC) for Operable Units 2A - 2D of the GE Hudson Falls Plant Site inactive hazardous waste disposal site, and the public's input to the Proposed Remedial Action Plan (PRAP) presented by the NYSDEC. A listing of the documents included as a part of the Administrative Record is included in Appendix B of the ROD.

Assessment of the Site

Actual or threatened releases of hazardous waste constituents from this site, if not addressed by implementing the response action selected in this ROD, present a current or potential significant threat to public health and/or the environment.

Description of Selected Remedy

Based on the results of the Remedial Investigation and Feasibility Study (RI/FS) for the GE Hudson Falls Plant Site and the criteria identified for evaluation of alternatives, the NYSDEC has selected Soil Treatment/Disposal to address contaminated soils, along with Enhancement of Existing Remedial System with Tunnel and Drain System to address groundwater and impacts of the site on the Hudson River. The components of the remedy are as follows:

- Building decommissioning and demolition;
- Excavation and treatment and/or disposal of contaminated soils to achieve a cleanup level to protect groundwater using the approach in applicable Department guidance;

- Establishment of a vegetated, engineered soil cover (minimum one foot thick, with a demarcation layer at the base) over the site;

- Enhancement of the existing groundwater and DNAPL management system by installation and operation of a tunnel and drain system constructed along the western portion of the site, adjacent to and beneath the Hudson River, to prevent migration of contaminated groundwater and DNAPL from the site to the river;

- Expansion of the wastewater treatment plant at the site to manage the additional wastewater generated at the site;

- Implementation of a Declaration of Limited Use and Restrictions, and implementation of institutional and engineering controls;

- Implementation of a long term monitoring program for surface water, groundwater, and biota;

- Performance of annual remedial program effectiveness reviews to determine if the remedy is still protective of human health and the environment.

New York State Department of Health Acceptance

The New York State Department of Health (NYSDOH) concurs that the remedy selected for this site is protective of human health.

Declaration

The selected remedy is protective of human health and the environment, complies with State and Federal requirements that are legally applicable or relevant and appropriate to the remedial action to the extent practicable, and is cost effective. This remedy utilizes permanent solutions and alternative treatment or resource recovery technologies, to the maximum extent practicable, and satisfies the preference for remedies that reduce toxicity, mobility, or volume as a principal element.

MAR 15 2004

Date

Dale A. Desnoyers, Director
Division of Environmental Remediation

TABLE OF CONTENTS

SECTION **PAGE**

1: SUMMARY OF THE RECORD OF DECISION 1

2: SITE LOCATION AND DESCRIPTION 2

3: SITE HISTORY 3
- 3.1: Operational/Disposal History 3
- 3.2: Remedial History 4
- 3.3: Operable Units 4

4: SITE CONTAMINATION 5
- 4.1: Summary of the Remedial Investigation 7
- 4.2: Interim Remedial Measures 17
- 4.3: Summary of Human Exposure Pathways 17
- 4.4: Summary of Environmental Exposure Pathways 18

5: ENFORCEMENT STATUS 19

6: SUMMARY OF THE REMEDIATION GOALS 20

7: SUMMARY OF THE EVALUATION OF ALTERNATIVES 20
- 7.1: Description of Remedial Alternatives 21
- 7.2 Evaluation of Remedial Alternatives 29

8: SUMMARY OF THE SELECTED REMEDY 36

Tables
- Table 1: Nature and Extent of Contamination
- Table 2: Summary of Remedial Alternative Costs

Figures
- Figure 1: Site Location Map
- Figure 2: PCB Release Locations
- Figure 3: Geologic Cross Section
- Figure 4A: Soil Boring Locations, Northeast Section
- Figure 4B: Soil Boring Locations, Southwest Section
- Figure 5A: Surface Soils Total PCB Map, Northeast Section
- Figure 5B: Surface Soils Total PCB Map, Southwest Section
- Figure 5C: Subsurface Soils Total PCB Map, Northeast Section
- Figure 5D: Subsurface Soils Total PCB Map, Southwest Section

- Figure 6A: Total PCB in Overburden Groundwater, Northeast Section
- Figure 6B: Total PCB in Overburden Groundwater, Southwest Section
- Figure 7: Overburden Potentiometric Surface
- Figure 8: Geologic Cross Section
- Figure 9: Clay Isopach Map
- Figure 10: Stratigraphic Units/Operable Unit Boundaries
- Figure 11: Strike of Major High Angle Fracture Sets
- Figure 12: Pre-Remediation Groundwater Flow Conditions in the Snake Hill Shale
- Figure 13: Snake Hill Shale Hydraulic Capture Boundary
- Figure 14A: Regional Snake Hill Shale Groundwater Flow
- Figure 14B: Extent of Dissolved Phase Groundwater Contamination
- Figure 15A: PCB in Hudson River Water at Roger's Island
- Figure 15B: PCB in Hudson River Water at Roger's Island
- Figure 16: Schematic RCRA Cap Footprint Map
- Figure 17: Schematic RCRA Cap Cross Section
- Figure 18: Existing Groundwater and DNAPL Extraction System Map
- Figure 19: Expanded Groundwater and DNAPL Extraction System Map
- Figure 20: Tunnel Layout Map
- Figure 21: Block Diagram Schematic of Tunnel/Drain System

Appendices

- Appendix A: List of Remedial Investigation Reports
- Appendix B: Restrictions on Future Use
- Appendix C: Administrative Record
- Appendix D: Tunnel and Drain System Details
- Appendix E: Cost Estimates Modifications
- Appendix F: Responsiveness Summary

RECORD OF DECISION

GE Hudson Falls Plant Site
Operable Units No. 2A - 2D
Village of Hudson Falls, Town of Kingsbury, Washington County, New York
Site No. 5-58-013
March 2004

SECTION 1 SUMMARY AND PURPOSE OF THE RECORD OF DECISION

As more fully described in Sections 3 and 4 of this document, General Electric Company's operations at its Capacitor Products Division (GE Hudson Falls) plant site have resulted in the disposal of a number of hazardous wastes, including a variety of chlorinated volatile organic compounds ("VOCs"), semi-volatile organic compounds ("SVOCs"), and polychlorinated biphenyls ("PCBs"), at the site, some of which were released or have migrated from the site to its surrounding environs, including the Hudson River. These disposal activities gave rise to significant threats to the public health and the environment:

- significant environmental damage associated with the impacts of contaminants (PCBs, SVOCs, and VOCs) on the aquifers beneath the site, which had been usable in the past for human water consumption but are now unusable without treatment due to the presence of PCBs, SVOCs, and VOCs above applicable standards.

- significant environmental damage associated with the impacts of contaminants (PCBs) released to the Hudson River from the soils, sediments, and bedrock at the site. These releases of PCBs from the site cause violations of the applicable surface water standards in the Hudson River in the vicinity of the site.

- the releases of hazardous waste from the site have significantly increased the risk to public health due to the consumption of contaminated fish from the Hudson River.

- the releases of PCBs from the site materially contribute to the need for the existing recommendation that human consumption of fish from the Hudson River, which includes the vicinity of the site, be limited.

In order to restore the GE Hudson Falls inactive hazardous waste disposal site to predisposal conditions to the extent feasible and authorized by law, but at a minimum to eliminate or mitigate all significant threats to the public health and the environment that the hazardous waste disposed at the site has caused, as discussed in detail in Section 7 of this document, the New York State Department of Environmental Conservation (NYSDEC), in

consultation with the New York State Department of Health (NYSDOH), has selected Alternative S4, Soil Treatment/Disposal for Operable Unit 2A, and Alternative G4, Enhancement of Existing Groundwater Remedial System with Tunnel and Drain System, for Operable Units 2B, 2C and 2D.

The selected remedies are intended to attain the following remediation goals selected for this site:

Mitigate the impacts of contaminated groundwater on human health and the environment:

- Eliminate, to the extent practicable, the potential for contaminated groundwater, which does not meet NYSDOH Part 5 Drinking Water Quality Standards, to be used as a drinking water supply.

- Eliminate, to the extent practicable, off-site migration of groundwater that does not attain NYSDEC Class GA Ambient Water Quality Criteria.

Mitigate the impacts of the contaminated soils at the site:

- Eliminate, to the extent practicable, the potential for direct human or animal contact with the contaminated soils on site.

- Eliminate, to the extent practicable, the releases of contaminants from the soils at the site to the groundwater which contribute to, or result in, violations of groundwater quality standards.

Mitigate the impacts of the contaminants at the site on the Hudson River:

- Eliminate, to the extent practicable, the migration of PCBs into the Hudson River via erosion of PCB contaminated soils, transport of suspended sediment with surface water, and transport of PCBs contained in non-aqueous phase liquids (NAPLs), groundwater or surface water.

- Eliminate, to the extent practicable, migration of NAPL to the Hudson River and other off-site areas through NAPL removal and groundwater recovery.

- Eliminate, to the extent practicable, the migration of PCBs from the site to biota in or near the Hudson River.

SECTION 2: SITE LOCATION AND DESCRIPTION

The General Electric Hudson Falls Plant Site is located on the east shore of the Hudson River in the Village of Hudson Falls, Town of Kingsbury, Washington County. Approximately 14 acres in size, the site is located along Sumpter Street and Allen Street, between Bridge St. to the north and the GL&V foundry to the south. To the north and south of the site are industrial properties; to the east are residential properties. The site is listed on the Registry of Inactive Hazardous Waste Disposal Sites (site #558013), and is designated as Class 2, indicating that the

hazardous waste disposed at the site poses a significant threat to human health and/or the environment.

See Figure 1 for a map showing site location.

The General Electric Hudson Falls Plant Site is one of two capacitor manufacturing facilities GE operated in Washington County. The other, the General Electric Fort Edward Plant Site, is located approximately one mile south of the GE Hudson Falls site, in the Town of Fort Edward. The Hudson Falls site is no longer an active manufacturing facility. GE still uses the Fort Edward site for the manufacture of capacitors; the GE Fort Edward site is listed on the Registry of Inactive Hazardous Waste Disposal Sites (site #558004), also as a Class 2 site, and is the subject of a separate inactive hazardous waste disposal site remedial program.

SECTION 3: SITE HISTORY

3.1: Operational/Disposal History

1952-1977: GE used the Hudson Falls site to produce capacitors that used PCBs as the dielectric fluid. Originally, Aroclor 1254 was used. As production continued at the plant, PCB use changed to Aroclor 1242, and eventually Aroclor 1016.

The term "Aroclor" refers to the commercially available mixtures of PCBs. Generally, the Aroclor number referred to the average degree of chlorination of the PCB mixture. For example, Aroclor 1254 is 54% chlorinated, and Aroclor 1242 is 42% chlorinated. Aroclor 1016 is very similar to 1242, with some small differences in PCB composition.

Other industrial chemicals used at the facility include the solvents trichloroethene (TCE) and trichloroethane (TCA). Additionally, substitute dielectric fluids were used after PCB use was curtailed in the mid 1970's, such as trichlorobenzene (TCB), bis(2-ethylhexyl) phthalate (BEHP), and phenyl xylyl ethane (PXE).

1977-1995: Production of capacitors continued at the Hudson Falls site, with substitute dielectric fluids such as TCB, BEHP, and PXE. The last several years of production did not involve capacitor filling; it was done at the nearby GE Fort Edward facility.

July 1995: Plant operations at Hudson Falls ceased.

Releases of chemicals from industrial operations at the plant to the environment occurred in a variety of ways. Releases occurred at the railroad off loading area and tank farm. Releases in the "treat" area, where capacitors were filled with dielectric fluid, resulted in the migration of PCBs and solvents directly into the bedrock beneath Building 1. In addition, there were direct discharges of untreated, industrial wastewater to the Hudson River. See Figure 2 for a map showing the location of areas at the site where releases occurred.

3.2: Remedial History

1976-77: As a result of a 1976 settlement between GE and NYSDEC on the issue of PCB contamination at the two capacitor plants and in the Hudson River, several remedial actions were taken to reduce or eliminate direct discharges of PCB to the river from the two capacitor plant sites at Hudson Falls and Fort Edward. The remedial actions at Hudson Falls included:

-eliminating direct discharges to the river;
-enclosing the tank farm;
-plugging the main discharge pipe (outfall 002) manholes with grout;
-routing all wastewater and storm water to two newly constructed holding basins;
-trucking all waters collected to the nearby GE Fort Edward facility for treatment at the newly constructed wastewater treatment plant

1989: PCB oils and sludges were removed from the "air plenum" beneath the basement of Building 1. The air plenum was originally part of the air handling system in Building 1, which was designed into the building upon its construction as a paper mill in 1920. GE used the air handling system beneath Building 1 as part of the wastewater management system at the site, as well as for recovery/reclamation of dielectric fluids.

Interim Remedial Measures taken at the site are listed in Section 4.2, below.

3.3: Operable Units

The GE Hudson Falls Plant Site is currently divided into four Operable Units, as defined in the 1997 Order on Consent. (For details on the Orders on Consent issued for this site, see Section 5, below.)

Operable Unit 2A consists of the soils and contamination that may be found at and in the vicinity of the site, above the Snake Hill Shale Formation (bedrock, typically located approximately 208 feet above mean sea level). Also included in this description are the soils within the eastern raceway south of the combined sewer overflow, and the sediments along the eastern shore of the Hudson River extending from the Fenimore Bridge to the Eastern Raceway gate structure.

Operable Unit 2B consists of the groundwater and contamination that may be found at or in the vicinity of the site above the Snake Hill Shale (bedrock), not including the soils.

Operable Unit 2C is defined as contamination and pathways of contaminant migration in the bedrock at or near the site, within the Snake Hill Formation above the elevation of the base of the plunge pool located beneath Baker's Falls.

Operable Unit 2D is defined as contamination and pathways of contaminant migration in the bedrock at or near the site, below Operable Unit 2C.

See Figure 3 for a cross section of the plant showing the approximate Operable Unit boundaries.

An "Operable Unit" represents a portion of the site which, for technical or administrative reasons, can be addressed separately to eliminate or mitigate a release, threat of release or exposure pathway resulting from the site contamination. Much of the investigation work done at the site has been performed by Operable Unit, to facilitate implementation.

This ROD does not address the investigation and remediation of the contamination in the water column and sediments of the Hudson River.

There had been three operable units defined at the site previously, Operable Units 1, 2, and 3. The definitions of Operable Units 1, 2, and 3 were discrete geographic areas at and in the vicinity of the GE Hudson Falls plant property. When the new Operable Units were defined, the older definitions no longer applied to the site, and the areas previously addressed within the three former Operable Units are addressed in the four new Operable Units. Operable Unit 1 was a discrete area of contaminated soils in the main manufacturing area; Operable Unit 2 was contamination and migration pathways at and in the vicinity of the site; Operable Unit 3 was discrete areas adjacent to the plant property in, and in the vicinity of, the Hudson River.

SECTION 4: SITE CONTAMINATION

In response to a determination that the disposal of hazardous waste at the site constitutes a significant threat to human health and the environment, GE completed a Remedial Investigation and Feasibility Study (RI/FS). This latest RI/FS completed the investigation of the plant site, and supplements the RI/FS started in 1989. The need for a supplemental plant site investigation arose from the discovery in the previous investigations that the scope of the environmental problems was much larger than previously understood.

The Commissioner may find that hazardous waste disposed at the site constitutes a significant threat to the environment if, after reviewing the available evidence and considering the factors the Commissioner deems relevant set forth in 6 NYCRR 375-1.4(b), the Commissioner determines that the hazardous waste disposed at the site or coming from the site results in, or is reasonably forseeable to result in,

- among other things, a bioaccumulation of contaminants in flora or fauna to a level that causes, or that materially contributes to, significant ecotoxicological effects in flora or fauna or leads, or materially contributes, to the need to recommend that human consumption be limited (6 NYCRR 375-1.4[a][1][iii]); or

- significant environmental damage (6 NYCRR 375-1.4[a][2]).

In making a finding as to whether a significant threat to the environment exists, the Commissioner may take into account any or all of the following matters, as may be appropriate under the circumstances of the particular situation:

- groundwater hydrogeology at and near the site (6 NYCRR 375-1.4[b][5]);
- location, nature, and size of surface waters at and near the site (6 NYCRR 375-1.4[b][6]);
- levels of contaminants in groundwater, surface water, air, and soils at and near the site and areas known to be directly affected or contaminated by waste from the site, including, but not limited to, contravention of: ambient surface water standards set forth in 6 NYCRR Part 701 or 702; ambient groundwater standards set forth in 6 NYCRR Part 703; drinking water standards set forth in 10 NYCRR Subpart 5-1 and Part 170 (6 NYCRR 375-1.4[b][7]);
- the extent to which hazardous waste and/or hazardous waste constituents have migrated or are reasonably anticipated to migrate from the site (6 NYCRR 375-1.4[b][9]);
- the proximity of the site to areas of critical environmental concern (as, wetlands or aquifers) (6 NYCRR 375-1.4[b][10]);
- the integrity of the mechanism, if any, that may be containing the hazardous waste to assess the probability of a release of the hazardous waste into the environment (6 NYCRR 375-1.4[b][12]); and
- the climatic and weather conditions at and in the vicinity of the site (6 NYCRR 375-1.4[b][13].)

(For a more detailed discussion respecting the Department's "significant threat" determinations and the rationale for its use of the above, and other, factors, in its decisionmaking, see the Draft Regulatory Impact Statement for 6 NYCRR Part 375, dated April 1991, at pages 19 to 25; and the Hearing Report, Responsiveness Summary, and Revision to the Draft Regulatory Impact Statement for 6 NYCRR Part 375, dated March 1992, at pages II-7 to II-19.)

The basis for the determination that the impacts of hazardous wastes disposed at the site constitute a significant threat to human health and the environment are based upon the findings that the hazardous wastes disposed at the site contribute to or result in:

- contraventions of groundwater standards for PCBs and VOCs (for concentrations of contaminants in groundwater at the site, see Table 1 below; for Water Quality Standards, see 6 NYCRR Parts 701 and 702;)
- contraventions of drinking water standards for PCBs and VOCs (for concentrations of contaminants in groundwater at the site, see Table 1 below; for drinking water standards, see 10 NYCRR Subpart 5-1 and Part 170;)
- contravention of surface water standards for PCBs (see Table 1 below, and for Water Quality Standards, see 6 NYCRR Parts 701 and 702;) and,
- bioaccumulation of contaminants (PCBs) in fauna to levels which materially contribute to the need to recommend that human consumption be limited (for the advisory on consumption of fish from this part of the Hudson River, *see* "2002-2003 Health Advisories, Chemicals in Sportfish and Game", NYSDOH, May 2, 2002).

The determination of significant threat associated with the site is therefore based primarily on:

- significant environmental damage associated with the impacts of contaminants (PCBs and VOCs) on the overburden and bedrock aquifers beneath the site, which had been

usable in the past for human water consumption, but which are now unusable without treatment due to the presence and resulting impacts of PCBs and VOCs above applicable standards;

- significant environmental damage associated with the impacts of contaminants (PCBs) released to the Hudson River from the groundwater, soils, sediments and bedrock at the site. These releases of PCBs from the site cause violations of the surface water standards for PCBs and resulting impacts in the Hudson River in the vicinity of the site;
- the presence of hazardous waste at the site has significantly increased the risk to public health due to the consumption of contaminated fish from the Hudson River; and
- the releases of PCBs from the site materially contribute to the need for the existing recommendation that human consumption of fish from the Hudson River, which includes the vicinity of the site, be limited.

4.1: Summary of the Remedial Investigation

The purpose of an RI is to define the nature and extent of any contamination resulting from prior activities at a site.

At the GE Hudson Falls site, remedial investigations began in 1988, after the site was reclassified to Class 2 on the Registry of Inactive Hazardous Waste Disposal Sites in New York. The first RI work resulted in a selection of remedy for a portion of the site (Operable Unit 1) in early 1993. However, after continued investigations at the site revealed an expanded area of impact at the site, a new RI was begun in 1993. A number of Interim Remedial Measures (IRMs) were performed over the time period 1993-97, the descriptions of which can be found in Section 4.2 below.

The most recent RI was conducted in a number of phases, between 1993 and 2001. A list of the pertinent Remedial Investigation Reports is attached as Appendix A.

The 1993- 2001 RI work included the following activities:

- Evaluate the results of previous investigations at the site;
- Investigate the thickness and quality of the fill materials beneath the manufacturing buildings and tunnels;
- Evaluate whether there are areas of non-aqueous phase liquids (NAPL) in the overburden materials;
- Evaluate historical information concerning potential silt deposition near Bridge Street and the Fenimore Bridge construction project;
- Identify potential contaminant migration pathways, such as channels in the bedrock surface or overburden clays;
- Investigate the soil to assess whether it is impacting groundwater quality;
- Investigate potential source areas and delineate dissolved groundwater contamination near the manufacturing buildings;
- Evaluate the quality and flow direction of groundwater in the overburden, including in the south portion of the site near John Street, and in the south end of the Eastern Raceway;

- Evaluate the water quality and the direction of groundwater flow within the Sumpter Street sewer trench;
- Evaluate the quality and flow direction of groundwater in the bedrock;
- Investigate the effect of manmade structures and the bedrock surface on groundwater flow near the former manufacturing buildings to evaluate potential contaminant pathways;
- Evaluate the potential for the vertical migration of dense non-aqueous phase liquids (DNAPL) through the overburden to the upper Snake Hill Shale;
- Evaluate the extent of contamination in the bedrock in the vicinity of the site;
- Evaluate the hydrogeologic properties of the bedrock beneath the site, and determine the parameters which govern groundwater and DNAPL flow; and
- Evaluate the geotechnical properties of the bedrock in the vicinity of the site.

To determine which media (soil, groundwater, *etc*.) contain contamination at levels which give rise to the significant threats posed by the site, the RI analytical data were compared to environmental Standards, Criteria, and Guidance (SCGs). Groundwater, drinking water, and surface water SCGs identified for the GE Hudson Falls Plant Site were based on NYSDEC Ambient Water Quality Standards and Guidance Values (6 NYCRR Parts 700-705) and on Part 5 of New York State Sanitary Code (10 NYCRR Part 5). NYSDEC Division of Environmental Remediation's TAGM 4046 soil cleanup level determination guidelines (NYSDEC TAGM 4046, and background conditions) were used as SCGs for soil.

Based upon the results of the remedial investigation in comparison to the SCGs and potential public health and environmental exposure routes, NYSDEC has concluded that certain areas and media of the site require remediation. These are summarized below. More complete information can be found in the 1993-2001 RI Reports.

Chemical concentrations are reported in parts per billion (ppb) and parts per million (ppm). For comparison purposes, SCGs are given for each medium (*see* Table 1).

4.1.1 Site Geology and Hydrogeology

The Site is located on the eastern bank of the Hudson River adjacent to the Bakers Falls dam. The stratigraphic units that have been identified beneath the Site are the overburden, the Snake Hill Shale, the Glens Falls Limestone, and the Isle La Motte Limestone (*see* Figures 8 and 10). Beneath the Site, the overburden, which consists of fill, sand, clay and till, ranges in thickness from two to 21 feet. The bedrock formations generally strike north-northeast, have an undulatory surface, and dip approximately three to five degrees to the southeast. The Snake Hill Shale, which is the uppermost bedrock formation, ranges in thickness from 150 to 250 feet beneath the Site. For the purpose of the Site investigations and evaluations, this formation has been subdivided into the upper Snake Hill Shale, middle Snake Hill Shale, and lower Snake Hill Shale. The Glens Falls Limestone and Isle La Motte Limestone, which are beneath the Snake Hill Shale, are approximately 100 and 60 feet thick, respectively.

There are three steeply dipping fracture sets in the Snake Hill Shale. The best-developed of these fracture sets trends approximately northeast-southwest. The two other fracture sets trend approximately northwest-southeast and approximately north-south, respectively. Figure 11 illustrates the orientation of these three steeply-dipping fracture sets. There are two laterally-continuous nearly horizontal thrust fault planes that are generally parallel to bedding and are usually contained within the middle Snake Hill Shale. One is referred to as the upper fault plane, and the other is referred to as the lower fault plane.

Hydraulic testing data indicate that the hydraulic conductivity of the middle Snake Hill Shale is greater than the hydraulic conductivity of the upper and lower Snake Hill Shale. Wells open to only the upper and lower Snake Hill Shale units generally do not produce much water due to the lower hydraulic conductivity of these units. The greater hydraulic conductivity of the middle Snake Hill Shale is likely due to the presence of several approximately horizontal fractures that are associated with the upper and lower fault planes. Within the Shake Hill Shale, the vertical fracture sets and the bedding-parallel fault planes and fracture zones are the principal geologic controls on the occurrence and movement of groundwater and contaminants.

Prior to the installation and pumping from the site extraction wells, which began in 1996, groundwater flow beneath the Site was generally southwesterly toward the Hudson River. Figure 12 is a schematic representation of groundwater flow at the Site and adjacent areas prior to operation of the extraction systems. Groundwater flow beneath the Site was influenced primarily by the elevation of the Hudson River above and below the Bakers Falls dam, the Sumpter Street sewer line, the tailrace tunnel, the vertical dropshafts associated with the tailrace tunnel, and historical groundwater extraction from nearby GL&V production wells. There was downward flow of groundwater and contaminants from the overburden to the underlying Snake Hill Shale and then toward the Hudson River. Downward flow of groundwater from the overburden to the underlying bedrock was allowed by the drainage effect of the Sumpter Street sewer, and the air plenums and drainage tiles located beneath portions of Building 1. These features lowered the water table into the bedrock, thereby dewatering portions of the overburden beneath the Site. In the area of the Hudson River, there was upward flow from the underlying Glens Falls Limestone and Isle La Motte Limestone towards the Snake Hill Shale and the Hudson River. Pumping from the former GL&V production wells, which are open-bedrock holes more than 300 feet deep, likely caused localized downward flow of groundwater from the Snake Hill Shale to the underlying Glen Falls and Isle La Motte Limestones.

The 35 operating extraction systems now create localized hydraulic capture zones within the overburden and Snake Hill Shale beneath the Site and adjacent properties. Several overburden and shallow bedrock extraction wells in the vicinity of the former manufacturing buildings have dewatered most of the overburden beneath the buildings. Several Snake Hill Shale extraction wells located adjacent to the Hudson River have created a hydraulic barrier between the Site and the Hudson River. The line of wells captures much of the contaminated groundwater that is flowing from the Site toward the river. Some of these wells also recover DNAPL. The line of wells has also created a hydraulic gradient from the river toward the Site,

thereby creating a capture zone in the Snake Hill Shale that extends beneath a portion of Bakers Falls (Figure 13).

Water level data collected from multi-level monitoring devices installed east of the Site, and from private bedrock wells located east of the Site, indicate that there is a groundwater divide in the Shake Hill Shale approximately 300 feet east of the Site. The groundwater divide is approximately parallel to the river. Groundwater flow in the bedrock east of the divide is generally southeasterly away from the Site and the Hudson River. West of the divide, groundwater flow is westerly toward the Site and the Hudson River. Similar flow conditions have been observed in the Snake Hill Shale near the GE Fort Edward Plant property, which is located about 0.5 miles south of the Site. Figure 14A is a regional upper Snake Hill Shale potentiometric map.

4.1.2 Nature of Contamination:

As described in the RI Reports, many soil, groundwater, and sediment samples were collected at the site to characterize the nature and extent of contamination.

The main contaminants of concern at the GE Hudson Falls Plant Site are PCBs, VOCs, and SVOCs.

PCBs are a group of 209 different synthetic organic chemicals which were used by industry because of their resistance to heat and degradation, their being good electrical insulators and dielectric fluids, and their having certain other useful properties. PCBs generally have relatively low solubility in water (are "hydrophobic"), relatively low volatility in air, and tend to preferentially associate with oils and fats (are "lipophilic"). PCBs also preferentially associate with organic carbon. In the environment, PCBs are relatively persistent, and are degraded only under certain conditions. PCBs bioaccumulate in animals; for example, PCBs in fish are frequently 100,000 or more times higher than levels found in water. PCBs pose a health risk to humans depending on the route and duration of exposure and the dose received. PCBs also pose ecological health risks.

VOCs are a group of organic chemicals which, as compared to PCBs, have greater solubility in water, and evaporate readily into air. The VOCs found at the GE Hudson Falls Plant Site are primarily industrial solvents such as TCE. VOCs generally do not bioaccumulate in the food chain, and are not persistent in an aquatic environment due to their high volatility. They can be persistent in subsurface environments. VOCs pose various human health and environmental risks depending on which chemical is present, route of exposure, duration of exposure, and dose received.

SVOCs are another group of organic chemicals which generally have moderate solubility in water, and do not evaporate into air readily. The SVOCs found at the GE Hudson Falls Plant Site are the substitute dielectric fluids used after the cessation of PCB use in 1977. They include trichlorobenzene (TCB), bis(2-ethylhexyl) phthalate (BEHP), and phenyl xylyl ethane (PXE). SVOCs pose various health and environmental risks depending on which chemical is present,

route and duration of exposure, and dose received. (PCBs are also SVOCs, but are described separately above due to the significance of PCBs at this site.)

Contaminants present within the soils at the site are predominantly in one of three phases: sorbed onto the soil particles, dissolved in the overburden groundwater, and as non-aqueous phase liquids, or NAPLs.

At the site, both light (LNAPL) and dense (DNAPL) non-aqueous phase liquids have been observed; most of the NAPLs are DNAPLs. "Light" and "dense", when describing non-aqueous phase liquids, refer to the specific gravity of the liquid relative to water. An LNAPL will tend to float on water, and a DNAPL will tend to sink.

In the vicinity of the main manufacturing area, the DNAPLs are typically on the order of 50% PCBs; the DNAPLs more distant from the main manufacturing area contain increasingly higher proportions of PCBs, often exceeding 90% PCBs. The transition from PCB dielectric fluids to non-PCB dielectric fluids in 1977 and thereafter resulted in a change in PCBs content; those DNAPLs close to the points of release show a greater proportion of substitute dielectric fluids.

4.1.3 Extent of Contamination

Table 1 summarizes the extent of contamination by the contaminants of concern in the soils and overburden groundwater at the site, and compares the data with the SCGs for the Site. The following are the media which were examined and a summary of the findings of the investigation.

Overburden Soils

During the course of the site investigation, over one hundred soil borings were drilled, and samples were taken. (*See* Figures 4A and 4B for maps of soil boring locations.) The soil contamination at the site is primarily found where industrial chemicals were received, processed, stored, or used. The soils beneath and in the vicinity of Buildings 1 and 1A (tank farm), and along the rail siding to the east of the buildings at the site, are where most of the soil contamination is located. Soil contamination was defined in the south end of the eastern raceway, south of the North Basin, north of Building 7, west of Building 4A, west, east, and south of Building 1, south of John Street/east of Allen street lot, and in the western portion of the former location of Buildings 8, 9, and 10. (*See* Figures 5A, 5B, 5C, and 5D for maps showing the distribution of surficial and total PCBs in the main manufacturing area and in the southwest portion of the site.) Concentrations of PCBs in soil were found at levels up to 250,000 ppm (meaning 25% of the sample was PCBs). High concentrations of PCBs are indicative of the presence of PCBs as a NAPL. Concentrations of SVOCs and VOCs were found up to 344 ppm, and 370 ppm, respectively. The Department estimates that between 80 and 264 metric tons (depending on estimating method used) of PCBs are present in the soils at the site.

Overburden Groundwater

Overburden (within the soils) groundwater quality has been characterized through installation and sampling of numerous monitoring wells throughout the site. Groundwater movement has been defined through the use of monitoring wells and piezometers (small diameter and short screen length wells) to measure water levels. Pumping tests have also been conducted to evaluate the hydrogeologic properties of the soils.

Groundwater contamination in the overburden soils is limited to two areas: the vicinity of the former manufacturing buildings, and the southern end of the eastern raceway. (*See* Figures 6A and 6B.) Groundwater in the vicinity of Buildings 1 and 1A is the most severely impacted, and are saturated with contaminants due to the presence of PCBs, VOCs, and SVOCs within the soils at high concentrations.

The movement of groundwater in the overburden soils at the site is controlled by variations of water levels over the site, the old municipal sewer trench under Sumpter Street, and the presence or absence of a clay layer that underlies part of the site. Groundwater elevations are higher to the east of the site, and lower to the west (toward the Hudson River). Water levels are generally higher in the soils than in the bedrock below. The clay layer at the site is absent in the vicinity of the Building 1/1A area, thereby permitting downward migration of groundwater into the bedrock. Migration of overburden groundwater to the west is intercepted by the trench for the old Sumpter Street municipal sewer, which was excavated into bedrock. Therefore, overburden groundwater is absent in the portion of the site west of the Building 1/1A (on the west side of Sumpter Street, toward the river). Currently, there is a recovery well system installed in the old Sumpter Street sewer trench, which controls the flow of contaminated groundwater in the vicinity of the old sewer. (*See* Figure 7 for a map of the overburden water table).

Bedrock Groundwater

Chemicals released from past GE operations at the site contaminate the bedrock beneath the site. The primary mechanisms of release to the bedrock beneath the site were the migration of contaminants directly into the bedrock from beneath Building 1 (via the return air duct and associated structures), along with the migration of groundwater and NAPL from the contaminated portion of the overburden. Figure 8 is a geologic cross section showing the major geologic units beneath the site.

The Upper Snake Hill Shale is contaminated in the immediate vicinity of the manufacturing buildings and in the vicinity of the Upper Raceway, and contains both contaminated groundwater and NAPL.

The extent of contamination in the Middle Snake Hill Shale is much larger; this portion of the formation is relatively permeable, as it is faulted and more highly fractured. Both contaminated groundwater and NAPL have been found in this unit. Contamination in this unit extends west out into the Hudson River and beneath Baker's Falls, as far north as Building 4A, and as far south as well HF-68BD beneath the adjacent GL&V, Inc. facility, where less than 1

ppb of PCB was detected. The extent of contamination to the east extends off the plant property. The results of groundwater monitoring at eight locations east and southeast of the plant property indicate that the contaminants have not migrated a significant distance in these directions, and are not impacting public or private water supply wells above standards.

The Lower Snake Hill Shale is a much more massive (less fractured) and less permeable formation, and acts to partly restrict the downward migration of NAPL at the site. However, both contaminated groundwater and NAPL have also been found in this unit. Contaminants extend west to beneath the Hudson River, south to the adjacent GL&V, Inc. property, and north to Building 4A. The extent of contamination to the east extends off the plant property. Groundwater monitoring east and southeast of the plant indicate that the contaminants have not migrated a significant distance, and are not impacting public or private water supply wells above standards.

The Glens Falls Limestone formation also contains contaminated groundwater and NAPL, but the extent of contamination is much less than in the overlying units. The contamination extends to the east bank of the river, north to Building 4, and south to well PW-1 beneath the adjacent GL&V facility. The extent of contamination to the east/southeast does extend off the plant property. Groundwater monitoring east and southeast of the plant indicate that the contaminants have not migrated a significant distance, and are not impacting public or private water supply wells. The most important portion of this unit is a volcanic ash layer (about 1 foot thick) located 10-13 feet below the contact with the overlying Lower Snake Hill Shale. This volcanic ash layer is more permeable than the rest of the limestone, and allows for accumulation of NAPL as well as lateral migration of the contaminants.

The known extent of contamination in the Isle La Motte Limestone is limited to immediately beneath the site area, and only one well has shown concentrations of contaminants indicative of the presence of NAPL nearby.

Generally, the flow of groundwater at the site is from east to west, discharging into the Hudson River. In the eastern portion of the site, the overburden groundwater is not in good communication with the bedrock groundwater, due the presence of a clay layer which overlies the bedrock surface. However, the clay layer is absent in the vicinity of Building 1 and in the portion of the site west of Buildings 1, 1A, 2, 3, and 4. Because the clay layer is absent in these portions of the site and because the water level in the overburden soils is higher than in the underlying bedrock, groundwater in the overburden discharges into the bedrock just west (downgradient) of the clay unit. The groundwater entering the bedrock can carry contaminants with it; there are significant amounts of contamination in the area where the clay ends. The absence of clay in these portions of the site also allows the downward migration of NAPLs into the bedrock from the soils. (*See* Figure 9.)

Within the bedrock, there are distinct flow regimes. In the upper portions of the bedrock (the Upper Snake Hill Shale), the vertical gradients are generally downward, meaning that the water is migrating into the Middle Snake Hill Shale as it moves toward the river. Within the

Middle Snake Hill Shale, the dominant groundwater flow direction is westerly and southwesterly, to the Hudson River. In the Lower Snake Hill Shale the horizontal gradient is westerly toward the Hudson River; the vertical gradients are upward, as the groundwater is discharging to the Hudson River from below. In the Glens Falls Limestone, the vertical gradient is also upward, but the horizontal flow gradient is to the south, down the axis of the Hudson River valley. This groundwater flow path, if uncontrolled, likely would result in groundwater discharge into the Hudson River some distance south of the site.

Since 1996, groundwater pumping has significantly modified the flow of groundwater in the vicinity of the site. Twenty nine recovery wells have been installed at the site, and other structures have also been used to collect groundwater, including the return air duct and related structures beneath Building 1, the old Sumpter Street municipal sewer line and trench, and the tailrace tunnel beneath the Allen Mill. The result of this groundwater extraction has been that much of the groundwater flow path from the site to the river has been intercepted. The recovered groundwater is routed to the on-site wastewater treatment plant (located in Building 4A near the northern end of the site) for treatment and discharge to the Hudson River.

Another result of the groundwater recovery program is the removal of significant amounts of the NAPLs which underlie the site. Pilot tests during the RI have shown that the recovery of NAPLs can be optimized at the site by manipulations of the water levels in the recovery wells. Approximately 6,500 gallons of PCB oil (as of January 2004) have been removed both manually and with the dual phase (simultaneous recovery of both water and NAPL from the same wells) recovery system since inception of a pilot program in 1996. Approximately 220 million gallons of groundwater have also been treated.

The existing groundwater and NAPL recovery system includes seven overburden recovery wells, five other overburden recovery points (including the return air duct and collection pit beneath Building 1), and eighteen bedrock recovery wells. The optimum water level is chosen to maximize DNAPL production from a given well, while maintaining sufficient capture zones to reduce off-site migration of contaminants. Water recovered by the system is routed to the on-site treatment facility, and is discharged after treatment (to non-detectable levels at 65 parts per trillion) into the Hudson River. The NAPLs generated are properly disposed at permitted off-site locations.

By doing dual phase recovery and achieving partial hydraulic containment of the site in the late 1990s, the migration of contaminants to the Hudson River from the site has been significantly reduced, and large amounts of contaminants have been removed. However, even though the large scale groundwater and DNAPL recovery system has been implemented, releases of PCBs from the site have not been eliminated. Control of contaminated groundwater beneath Baker's Falls adjacent to the site has not yet been achieved, and the recovery wells along the river are not completely effective in preventing the migration of DNAPL from the site to the river.

The impact of the site on the river can be seen in the results of water column monitoring done in the vicinity of the site, which indicate relatively high levels of PCBs in river water and biota immediately adjacent to the site.

Surface Water

Surface water monitoring in the Hudson River has been conducted upstream and downstream of the site by GE since 1991 as part of the Remnant Deposit Post Construction Monitoring Program (PCRDMP). USEPA ordered and oversees this work, which includes weekly (typically) water column samples taken at the Fenimore Bridge immediately upstream of the GE Hudson Falls plant site, at the Route 197 bridge on Roger's Island in Fort Edward, at the Thompson Island Dam, and at the Route 29 bridge in Schuylerville.

Surface water samples have also been taken since 1998 from the plunge pool at the base of Baker's Falls immediately adjacent to the site. Concentrations of PCBs measured in the plunge pool vary widely, ranging from non-detect (detection limit of 11 parts per trillion) to 3,930 parts per trillion. Typically, concentrations range between non-detect and 200 parts per trillion, with the higher concentrations found in the samples taken immediately adjacent to the eastern shoreline.

Samples taken upstream of the site are almost always non-detect for PCBs at a detection limit of 11 parts per trillion. Figures 15A and 15B show the results from samples taken at the Fenimore Bridge just upstream of the site, and at Roger's Island approximately two miles downstream. From late 1991 through early 1993, releases from the GE Hudson Falls plant site caused significant increases (up to 4,000 parts per trillion) in water column PCB downstream of the site. Implementation of IRMs in 1993 (including the gate structure repair and sediment removals from the raceways and tailrace tunnel; *see* the Section 4.2, below) at this site resulted in major reductions in water column PCB concentrations downstream of the site. Implementation of the groundwater and DNAPL recovery program in 1995 began a trend of lower PCB concentrations downstream of the site.

The scale of Figure 15A is larger to allow the reader to see the magnitude of the peak PCB concentrations in September 1991. The scale of Figure 15B has been adjusted to allow the reader to see the recent lower trends in concentrations measured at Roger's Island.

Sediments

Sediments at the site contaminated with PCBs have been identified. Two such areas at the site have been identified are at the former 002 Outfall location, and within the old Allan Mill structures.

Prior to 1977, wastewater was discharged to the Hudson River from the Building 1/1A area (see Figure 2) through a pipe which was designated as the "002 outfall." This pipe entered the river at the "pumphouse," along the eastern shore of the river just upstream of the eastern gate structure for the Baker's Falls dam. Sediment accumulated on the downstream side of the pumphouse and was contaminated by releases of PCBs from the site. Concentrations of PCBs in

this sediment were found up to 21,000 ppm. As described below in the following section, these sediments were removed as an Interim Remedial Measure in 1998-99.

The Allen Mill is an old textile mill constructed in the mid-1800's which borders a portion of the GE property to the southwest and west of the site (see Figure 2). Water power for the mill was obtained by diverting the river water around the Baker's Falls dam into the "eastern raceway" (also referred to as the "upper raceway" in some reports), and through the mill works down to a "tailrace tunnel" that was excavated into bedrock below the mill at river level near the base of the falls. Water was also diverted into the "lower raceway" through the use of the wing dam which juts out of the lower part of the mill into Baker's Falls. This mill complex has not been active for many years.

In January 1993, the Adirondack Hydro Development Corporation (AHDC) was beginning the redevelopment of the Baker's Falls hydroelectric facility. AHDC agreed to accelerate repair of the gate structure at the eastern end of the Baker's Falls dam, which was allowing water to flow into the eastern raceway and through the mill. Gate structure repairs reduced water flow through the mill by April 1993, and eliminated in June 1993, which reduced PCB mobilization to the river from the Mill area and allowed access to the mill for sampling and remediation. Results of sediment sampling in the mill, raceways and tailrace tunnel indicated that PCBs contaminated the sediment in the mill area. Sediment PCBs concentrations in the Eastern Raceway and Lower Raceway were typically on the order of 2000 ppm PCBs; sediment PCBs concentrations in the Tailrace Tunnel averaged greater then 30,000 ppm PCBs. Seepage of NAPL containing high percent levels of PCBs was also observed draining from the bedrock into the raceways and Tailrace Tunnel.

In 1993-95, GE performed Interim Remedial Measures (IRMs) in the Allen Mill area to remove the contaminated sediments from most of the Eastern Raceway, from the Tailrace Tunnel, and from the Lower Raceway, and to establish systems for the collection of groundwater and NAPL seeping out of the bedrock in this area. Seepage collection has been ongoing and expanded since that time. Implementation of these IRMs resulted in the removal of an estimated 45 tons of PCBs.

Biota

NYSDEC has conducted biota monitoring in the Hudson River in vicinity of the site and in the reach of river immediately downstream of the site. The results of biota monitoring has indicated that the site continues to be a source of PCB to fish and other organisms in the Hudson River in the vicinity of the site and downstream of the site. Concentrations of PCB in fish in 1999 near the former pump house immediately adjacent to the site ranged from 0.81 to 33.90 ppm (mean of 7.42 ppm) in rock bass, from 5.81 to 154.94 ppm (mean of 56.02 ppm) in brown bullhead, and from 2.07 to 226.87 ppm (mean of 60.50 ppm) in smallmouth bass.

4.2 Interim Remedial Measures:

IRMs are discrete sets of activities to address both emergency and non-emergency site conditions, which can be undertaken without extensive investigation or evaluation, to prevent, mitigate, or remedy environmental damage or the consequences of same attributable to a site.

Numerous IRMs have been undertaken at the GE Hudson Falls Plant Site since early 1993. These actions have resulted in the significant reduction of PCB migration to the Hudson River from the site and in the removal of a large mass of contamination (an estimated 135 tons of PCBs) from the site. They include:

- sediment removal from the eastern raceway, lower raceway, and tailrace tunnel;
- seepage collection (water and PCB oil) in the eastern raceway and tailrace tunnel;
- seepage collection on a portion of Baker's Falls when lower river flows permit;
- construction of a new state-of-the-art wastewater treatment system to manage all waters generated at the site;
- installation and operation of a pilot overburden groundwater and PCB oil recovery system;
- installation and operation of a pilot (now plant-wide) bedrock groundwater and PCB oil recovery system;
- removals of large volumes of PCB oils and sludges from beneath Building 1;
- clean out and replacement of the Sumpter Street municipal sewer;
- implementation of a bedrock grouting project in the northern end of the eastern raceway to inhibit migration of PCB oil into the Hudson River;
- installation and operation of an in-river seep collection system in the plunge pool of Baker's Falls to capture PCB oil prior to discharge into the river;
- installation and operation of a pilot (now expanded) groundwater and PCB oil recovery system in the tailrace tunnel to intercept migration of contaminants to the river from beneath a portion of the site, and from beneath Baker's Falls; and
- removal of debris and sediment containing high levels of PCBs downstream of, and adjacent to, the pump house and former 002 outfall location on the east shore of the Hudson River. This removal was done to remove this material and allow for an inspection of the river bottom in this area.

4.3 Summary of Human Exposure Pathways:

This section describes the types of human exposures that may present added health risks to persons at or around the site.

An exposure pathway describes the means by which an individual may be exposed to contaminants originating from a site. An exposure pathway has five elements: [1] a contaminant source, [2] contaminant release and transport mechanisms, [3] a point of exposure, [4] a route of exposure, and [5] a receptor population.

The source of contamination is the location where contaminants were released to the environment (any waste disposal area or point of discharge). Contaminant release and transport mechanisms carry contaminants from the source to a point where people may be exposed. The exposure point is a location where actual or potential human contact with a contaminated medium may occur. The route of exposure is the manner in which a contaminant actually enters or contacts the body (e.g., ingestion, inhalation, or direct contact). The receptor population is the people who are, or may be, exposed to contaminants at a point of exposure.

An exposure pathway is complete when all five elements of an exposure pathway are documented. An exposure pathway is considered a potential pathway when one or more of the elements currently does not exist, but could in the future.

Potential Exposure Pathways

- People could be exposed to PCBs through ingestion of fish from the Hudson River, which have been contaminated, in part, from the site.
- People could be exposed to site contaminants through ingestion of groundwater if it is used in the future for drinking water.
- While performing excavations or other duties, on-site workers could be exposed to contaminants in the surface soil, subsurface soil, and shallow groundwater through ingestion, inhalation of vapors or contaminated dust, and dermal contact.
- People trespassing at the site or using the area along the Hudson River near the site could be exposed to contamination through contact with contaminated soil or other material, incidental ingestion of contaminated soil, and inhalation of vapors or contaminated dust.

4.4 Summary of Environmental Exposure Pathways:

This section summarizes the types of environmental exposures presented by the site. The Hudson River is exposed to contaminants due to its location hydraulically downgradient of the site. Ecological exposure pathways are considered to be complete at the site. The primary ecological exposure pathway is through migration of PCBs from the site to the Hudson River, and subsequent exposure of fish and wildlife and aquatic organisms in this area of the Hudson River. The potential also exists for direct contact with and ingestion of soils and water containing PCBs by wildlife such as birds, mammals and fish residing on and adjacent to the site. The migration pathways that can transport PCBs to the Hudson River are precipitation causing erosion of surface soils, migration of groundwater, and migration of NAPLs.

The site represents a localized source condition, having impacts on biota in the vicinity of the site. This site also contributes to river-wide impacts on biota.

SECTION 5: ENFORCEMENT STATUS

Potentially Responsible Parties (PRPs) are those who may be legally liable for the cleanup of contamination at a site. This may include past or present owners and operators, waste generators, and haulers. GE has been identified as the PRP for this site.

The following is the chronological enforcement history of this site.

Orders on Consent

Date	Index	Subject
1985	C5-0001-8506	Preliminary Investigations
1989	C5-0001-8506	RI/FS (Modification of 1985 Order)
1993	A5-0928-93-03	Expansion of RI/FS program; authorization of IRMs
1993	A5-0927-93-03	Implementation of OU1 remedy
1997	D5-0002-96-06	Redefinition of Operable Units, cost recovery, completion of RI/FS
1998	D5-0002-96-06	Modification of Order to include costs associated with the "Long Term Hudson River PCB Analysis Project"
2001	D5-0002-96-06	Second Modification of Order to continue inclusion of costs associated with the "Long Term Hudson River PCB Analysis Project"

NYSDEC issued the 1986 Order on GE's consent to begin the process of evaluating the site through preliminary investigations. NYSDEC issued the 1989 Order on GE's consent after the site was reclassified to Class 2 on the Registry, indicating that the hazardous waste disposed at the site posed a significant threat to human health and/or the environment. NYSDEC issued one 1993 Order on GE's consent (Index #A5-0928-93-03) after NYSDEC determined that the conditions at the site required an expanded remedial investigation program. The other 1993 Order (Index #A5-0927-93-03) was issued on GE's consent to address the implementation of the Operable Unit 1 remedial action. NYSDEC issued the 1997 Order on GE's consent to address cost recovery issues, to redefine the Operable Units at the site, and to address completion of the RI/FS program at the site. NYSDEC issued the 1998 modification to the 1997 Order on GE's consent to include provisions for GE to fund three years of fish monitoring in the Hudson River through State Fiscal Year 1998-1999. NYSDEC issued the 2001 modification to the 1997 Order on Consent to continue the provisions for GE to partially fund fish monitoring in the Hudson River in 2001, and allow for additional extensions of the GE funding for NYSDEC's fish monitoring program.

SECTION 6 SUMMARY OF THE REMEDIATION GOALS

Goals for the remedial program have been established through the remedy selection process stated in 6 NYCRR 375-1.10. The overall remedial goal is to restore the site to pre-disposal conditions, to the extent feasible and authorized by law, with the minimum remedial objective being to eliminate or mitigate, through the proper application of scientific and engineering principles, all significant threats to the public health and to the environment presented by the hazardous waste disposed at the site.

The proposed remedies are intended to attain the following remediation goals selected for this site:

Mitigate the impacts of contaminated groundwater on human health and the environment:

- Eliminate, to the extent practicable, the potential for contaminated groundwater, which does not meet NYSDOH Part 5 Drinking Water Quality Standards, to be used as a drinking water supply.

- Eliminate, to the extent practicable, off-site migration of groundwater that does not attain NYSDEC Class GA Ambient Water Quality Criteria.

Mitigate the impacts of the contaminated soils at the site:

- Eliminate, to the extent practicable, the potential for direct human or animal contact with the contaminated soils on site.

- Eliminate, to the extent practicable, the releases of contaminants from the soils at the site to the groundwater which contribute to, or result in, violations of groundwater quality standards.

Mitigate the impacts of the contaminants at the site on the Hudson River:

- Eliminate, to the extent practicable, the migration of PCBs into the Hudson River via erosion of PCB contaminated soils, transport of suspended sediment with surface water, and transport of PCBs contained in non-aqueous phase liquids (NAPLs), groundwater or surface water.

- Eliminate, to the extent practicable, migration of NAPL to the Hudson River and other off-site areas through removal and hydraulic management.

- Eliminate, to the extent practicable, the migration of PCBs from the site to biota in or near the Hudson River

SECTION 7: SUMMARY OF THE EVALUATION OF ALTERNATIVES

The selected remedy must be protective of human health and the environment, and at a minimum, eliminate or mitigate all significant threats to the public health and the environment presented by the hazardous waste disposed at the site through the proper application of scientific

and engineering principles. Potential remedial alternatives for the GE Hudson Falls Plant Site were identified, screened and evaluated in a Feasibility Study. These evaluations are presented in reports entitled:

- Feasibility Study for Overburden Soil and Groundwater, Operable Units 2A and 2B, General Electric Company, Hudson Falls, NY (Dames and Moore, January 15, 1997)
- Addendum to Feasibility Study for Overburden Soil and Groundwater, Operable Units 2A and 2B, General Electric Company, Hudson Falls, NY (Dames and Moore, March 18, 1998)
- Recommendation for a Comprehensive Site-Wide Remedy and Feasibility Study for Bedrock Groundwater (OU 2C and OU 2D), Hudson Falls NY Plant Site (GeoTrans, March 2001)
- Addendum to Recommendation for a Comprehensive Site-Wide Remedy and Feasibility Study for Bedrock Groundwater (OU 2C and OU 2D), Hudson Falls NY Plant Site (GeoTrans, December 2001)

A summary of the Department's detailed analysis follows. As used in the following text, the "time to implement" reflects only the time required to construct the remedy, and does not include the time required to design the remedy, procure contracts for design and construction, or to negotiate with responsible parties for implementation of the remedy.

7.1: Description of Alternatives

The potential remedies are intended to address the contaminated soils, sediments, and groundwater at the site. Included in all alternatives (except the No Further Action alternatives) is continued operation of the existing IRM groundwater, NAPL, and seepage collection systems until construction of the selected remedy is complete and the remedial systems are on line and operational. The Department anticipates that a number of these systems would continue to be operated as part of the final remedy for the site; the systems to be included would be determined in remedial design.

The alternatives presented below represent two sets of alternatives, to address the contaminated soils at the site (Operable Unit 2A), and the contaminated groundwater and non-aqueous phase liquids in the overburden and bedrock beneath and in the vicinity of the site (Operable Unit 2B, 2C and 2D). The No Further Action alternative is presented for each set of alternatives as a baseline for comparison.

The soil treatment/disposal alternative (alternative S4) in this ROD differs from the alternative in the 2003 PRAP. The Department modified this remedial alternative in response to comments during the public comment period that the excavation and treatment of surficial soils to prevent direct contact human health exposures was redundant, as the alternative also included the installation of an engineered soil cover at the site. The Department has concluded that the engineered soil cover will abate the potential for direct contact human health exposures at the site, and has omitted the excavation and treatment of surficial soils from alternative S4, resulting in a change in estimated soil volume from 27, 100 to 23,900 cubic yards and a change in estimated cost from $36.5 million to $35 million.

For the purposes of evaluating remedial alternatives in this ROD, the Department is utilizing the soil volume estimates which were developed for a soil cleanup level to protect against surface exposures and to protect groundwater, 1 ppm PCB at the surface and 10 ppm PCBs in the subsurface, in the Feasibility Study reports for the overburden soil and groundwater.

The three remedial options beyond No Further Action to address the contaminated soils at the site are use of a soil cover; a RCRA cap and soil cover, and soil treatment/disposal.

The three remedial options beyond No Further Action to address the contaminated groundwater and non-aqueous phase liquids in the overburden and bedrock are continued operation of the existing remedial systems; enhancement of the existing systems through installation of additional recovery wells; and enhancement of the existing systems through installation of a tunnel and drain recovery system along the Hudson River.

Specific details of the remedial alternatives are as follows.

Soils Remedial Alternatives
Operable Unit 2A

Alternative S1:

No Further Action

This alternative recognizes remediation of the site conducted under the previously completed IRMs. Only continued monitoring is necessary to evaluate the effectiveness of the remediation completed under the IRM. This alternative would leave the site in its present condition and would not provide any additional protection to human health or the environment.

The elements of this alternative would be cessation of existing overburden groundwater control system, along with institutional controls, including implementation of a soil management plan, deed notices and access control (site fence), and long term monitoring. A monitoring program would be continued which would include monitoring well and private well sampling, along with upstream and downstream sampling of surface water and biota in the Hudson River.

The institutional controls would be certified annually by the site owner that the controls are in place and are effective. Appendix B contains a description of the soil management plan and the deed notification requirements.

Present Worth:	$ 2,110,000
Capital Cost:	$ 182,000
Annual O&M:	$ 125,000
Time to Implement	6 months - 1 year

{Present Worth is calculated by adding the capital cost to the present worth of the Operation and Maintenance costs computed for the expected duration of the operation of the remedy or 30 years which ever is less, assuming an interest rate of 7 percent per annum}

Alternative S2:

Soil Cover

This alternative includes all of the institutional control actions identified in Alternative 1. Under this alternative, the buildings at the site would be properly decommissioned and demolished, with the building debris disposed in the basement of Building 1. A concrete cap would be constructed over the south end of the Eastern Raceway, and a vegetated soil cover (1 foot thick minimum, with a demarcation layer at the base) would be placed over the entire site. A monitoring program would be continued which would include monitoring well and private well sampling, along with upstream and downstream sampling of surface water and biota in the Hudson River.

This alternative would include implementation of institutional controls, including implementation of a soil management plan, deed notices and access control (site fence), and long term monitoring. The institutional controls would be certified annually by the site owner that the controls are in place and are effective. Appendix B contains a description of the soil management plan and the deed notification requirements

Present Worth:	$ 12,647,000
Capital Cost:	$ 9,615,000
Annual O&M:	$ 244,000
Time to Implement	6 months - 1 year

Alternative S3:

RCRA Cap and Soil Cover

This alternative includes all of the institutional control actions identified in Alternative 1. A RCRA cap would also be constructed over the vicinity of Buildings 1, 1A, 2, 3, and 4 with a goal of capping soils at the site contaminated to hazardous waste levels (50 ppm or greater) for PCBs. Some consolidation may be needed. (See Figure 16 for a map of the approximate boundaries of the RCRA cap, and Figure 17 for a schematic cross-section of the area which would be capped.) Appendix C contains a detailed description of the requirements of a RCRA cap.

The RCRA cap will significantly reduce the potential for mobilization of contaminants by rainfall infiltration, and prevent direct contact exposures. The contaminated soils in the south end of the eastern raceway would be excavated and either disposed in a properly permitted

facility off-site (soils exceeding 50 ppm PCBs) or consolidated beneath the cap. The goal of this removal would be to remove all soils above the site specific cleanup level.

If this RCRA cap and soil cover alternative were implemented, the contaminated soils at the site would either be contained by the cap and soil cover, or (in the case of the soils in the south end of the eastern raceway) excavated and disposed off site. The cleanup level would be refined in design, and would be calculated based upon the approach described in TAGM 4046 to protect groundwater. Site specific parameters (mixtures of chemicals present, solubility, partitioning coefficients, soil organic carbon content, attenuation mechanisms) which impact the calculations of soil cleanup level to protect groundwater will be gathered during remedial design to allow for determination of the final soil cleanup level for the site.

The remainder of the site would be covered with a vegetated soil cover (1 foot thick minimum, with a demarcation layer at the base) to prevent direct contact exposure to soils, and to promote runoff. The existing groundwater and NAPL control systems would continue to be operated and maintained. A monitoring program would be continued which would include monitoring well and private well sampling, along with upstream and downstream sampling of surface water and biota in the Hudson River.

This alternative would include implementation of institutional controls, including implementation of a soil management plan, deed notices and access control (site fence), and long term monitoring. The institutional controls would be certified annually by the site owner that the controls are in place and are effective. Appendix B contains a description of the soil management plan and the deed notification requirements

Present Worth:	$ 14,655,000
Capital Cost:	$ 11,633,000
Annual O&M:	$ 244,000
Time to Implement	1-2 years

Alternative S4:

Soil Treatment/Disposal

This alternative includes all of the institutional control actions identified in Alternative 1, as well as the off-site disposal of hazardous debris from building demolition at the site. The contaminated soils at the site would be actively remediated by treatment and/or off site disposal. The cleanup level would be calculated consistent with TAGM 4046 to protect groundwater.

The selection of treatment technology will also occur in remedial design. Applicable treatment technologies will be evaluated, and demonstration projects will be utilized to determine which technologies are most applicable to the contaminated soils at the site. Technologies which may be applicable could include thermal desorbtion, solvent extraction, soil washing, or in-situ thermal treatment. Soils which are not amenable to treatment due to

technology limitations, or which can not be feasibly treated to the site cleanup levels, will be considered for off site disposal at a properly permitted facility.

To represent this alternative and the estimated costs, the treatment alternative described in the FS reports for the soils at the site is described here. An indirectly fired thermal desorber would be used to vaporize the contaminants from the soil. The treated soils would not contain levels of contaminants which would result in leaching or mobilization of contaminants from the soils, causing violations of applicable environmental quality standards. Steam stripping can be used to enhance the removal of contaminants from the soil after treatment in the rotary desorber. Extracted contaminants would be collected by adsorption and condensation. The condensed vapors would be treated through a mobile water treatment system. The volume of soil which would be addressed under this alternative is approximately 23,900 cubic yards. The non-toxic, treated soils would be left on-site after treatment is complete. A vegetated soil cover (1 foot thick minimum, with a demarcation layer at the base) would be placed over the entire site. A monitoring program would be continued which would include monitoring well and private well sampling, along with upstream and downstream sampling of surface water and biota in the Hudson River.

The selection of treatment technology will also occur in remedial design. Applicable treatment technologies will be evaluated, and demonstration projects will be utilized to determine which technologies are most applicable to the contaminated soils at the site. Soils which are not amenable to treatment due to technology limitations, or which can not be feasibly treated to the site cleanup levels, will be considered for off site disposal at a properly permitted facility.

This alternative would include implementation of institutional controls, including implementation of a soil management plan, deed notices and access control (site fence), and long term monitoring. The institutional controls would be certified annually by the site owner that the controls are in place and are effective. Appendix B contains a description of the soil management plan and the deed notification requirements.

Present Worth:	$ 34,985,000
Capital Cost:	$ 32,016,000
Annual O&M:	$ 239,000
Time to Implement:	1-2 years

Groundwater Remedial Alternatives
Operable Units 2B, 2C and 2D

Alternative G1:

No Further Action

This alternative recognizes remediation of the site conducted under the previously completed IRMs. Only continued monitoring is necessary to evaluate the effectiveness of the remediation completed under the IRMs. This alternative would leave the site in its present condition and would not provide any additional protection to human health or the environment.

The elements of this alternative would be cessation of existing overburden groundwater control system, along with institutional controls, including implementation of a soil management plan, deed notices and access control (site fence), and long term monitoring. A monitoring program would be continued which would include monitoring well and private well sampling, along with upstream and downstream sampling of surface water and biota in the Hudson River.

The institutional controls would be certified annually by the site owner that the controls are in place and are effective. Appendix B contains a description of the soil management plan and the deed notification requirements.

Present Worth:	$ 0
Capital Cost:	$ 0
Annual O&M:	$ 0
Time to Implement:	<6 months

Alternative G2:

Operate Existing Remedial Systems

Under this alternative, the existing groundwater and NAPL control systems would continue to be operated and maintained. The existing water treatment plant at the site would be utilized. Discharges from the wastewater treatment plant would meet State Pollution Discharge Elimination System (SPDES) effluent requirements.

The operation of the system would be designed to minimize the migration of site contaminants to off site areas, including the Hudson River. Remedy reviews would occur every five years to ensure that the remedy continues to perform as designed.

A monitoring program would be implemented which would include monitoring well and private well sampling, along with upstream and downstream sampling of surface water and biota in the Hudson River.

This alternative would also include institutional controls, including deed notices and access control, and long term monitoring. Appendix B contains a description of the deed notification requirements.

The institutional controls would be certified annually by the site owner that the controls are in place and are effective.

See Figure 18 for a map showing the locations of the existing groundwater and NAPL recovery points.

Present Worth:	$ 11,545,000
Capital Cost:	$ 0
Annual O&M:	$ 927,000
Time to Implement:	<1 year

Alternative G3:

Enhancement of Existing Remedial System with Additional Recovery Wells

Under this alternative, the existing groundwater and NAPL control systems would be enhanced through the installation and operation of 24 additional recovery wells along the western boundary of the site, adjacent to the Hudson River. An expansion of the existing wastewater treatment plant from 125 gallons per minute (gpm) to 250 gpm would also be performed to manage the additional wastewater generated by the recovery system expansion. Discharges from the wastewater treatment plant would meet State Pollution Discharge Elimination System (SPDES) effluent requirements.

The operation of the enhanced remedial system would be designed to minimize the migration of site contaminants to off site areas, including the Hudson River. Remedy reviews would occur every five years to ensure that the remedy continues to perform as designed.

A monitoring program would be implemented which would include monitoring well and private well sampling, along with upstream and downstream sampling of surface water and biota in the Hudson River.

This alternative would also include institutional controls, including deed notices and access control, and long term monitoring. Appendix B contains a description of the deed notification requirements.

The institutional controls would be certified annually by the site owner that the controls are in place and are effective.

Figure 19 shows the locations of the additional recovery wells which would be installed.

Present Worth:	$ 23,263,000
Capital Cost:	$ 4,271,000
Annual O&M:	$ 1,531,000
Time to Implement:	1 year

Alternative G4:

Enhancement of Existing Remedial System with Tunnel and Drain System

Under this alternative, the existing groundwater and NAPL control systems would be enhanced through the installation and operation of a tunnel and drain system constructed along the western portion of the site, adjacent to and beneath the Hudson River. This system would consist of vertical shaft in the southwestern portion of the site, a horizontal shaft extending near to near the eastern bank of the Hudson River, a horizontal shaft extending approximately 600 feet south along the riverbank, a curving horizontal shaft extending 650 feet north along the riverbank and beneath Baker's Falls, and a horizontal shaft extending 300 feet northwest along the base of Baker's Falls. (*See* Figure 20.) Vertical drain wells would be installed upward from the tunnel, terminating shortly before the surface is reached. (*See* Figure 22.) These vertical drain wells would, along with the tunnel, create steep hydraulic gradients within the bedrock toward the drains and tunnel, preventing further migration of contaminated groundwater and NAPLs to the river. Preliminary tunnel design details can be found in Appendix D.

The final layout and dimensions of the tunnel will be determined in design, and will be designed to prevent the migration of all site-related contaminants to the Hudson River. An expansion of the existing wastewater treatment plant from 125 gallons per minute (gpm) to 250 gpm would also be performed to manage the additional wastewater generated by the recovery system expansion. Discharges from the wastewater treatment plant would meet SPDES effluent requirements.

The spacing of the vertical drain wells will be evaluated in remedial design, and would be determined, with NYSDEC review and approval, based upon testing during construction to ensure that the spacing is sufficiently close to ensure that contaminated groundwater and NAPL will be prevented from entering the Hudson River.

The operation of the enhanced remedial system would be designed to minimize the migration of site contaminants to all off site areas, including the Hudson River. Remedy reviews would occur every five years to ensure that the remedy continues to perform as designed.

A monitoring program would be implemented which would include monitoring well and private well sampling, along with upstream and downstream sampling of surface water and biota in the Hudson River.

This alternative would also include institutional controls, including deed notices and access control, and long term monitoring. Appendix B contains a description of the deed notification requirements.

The institutional controls would be certified annually by the site owner that the controls are in place and are effective.

Present Worth:	$ 29,982,000
Capital Cost:	$ 13,060,000
Annual O&M:	$ 1,353,000
Time to Implement:	1-2 years

7.2 Evaluation of Remedial Alternatives

The remedial program for a site must be selected upon due consideration of the following factors, as described in 6 NYCRR 375-1.10. For each factor, a brief description is provided followed by an evaluation of the alternatives against that criterion. Further discussion of the evaluation criteria and comparative analysis can also be found in the Feasibility Study reports.

Soil Remedial Alternatives

1. Compliance with New York State Standards, Criteria, and Guidance (SCGs). This factor addresses whether or not a remedy will meet applicable environmental laws, regulations, standards, and guidance.

Alternatives S1, S2 and S3 would result in continued releases of PCB and other contaminants from the contaminated soils to the groundwater of the state and the environment, contributing to the exceedance of the water quality standards. Alternative S4 would eliminate these soils as a source of continuing groundwater contamination above standards.

2. Protection of Human Health and the Environment. This factor is an overall evaluation of the health and environmental impacts to assess whether each alternative is protective.

Alternative S4 would eliminate the direct contact route of exposure at the site. The capping and soil cover alternatives (S2 and S3) would also eliminate this route of exposure if properly maintained; the capping alternatives (S3) would be more reliable than the soil cover alternative (S2) in eliminating the exposure. The No Further Action (S1) alternative would not

address the direct contact route of exposure, as the contaminated surface soils would not be covered or removed.

Alternative S4 would also be protective of the environment, in that the contaminated soils would no longer act as a source of continuing groundwater contamination above standards. Alternatives S1 would not provide any additional protection of the groundwater. Alternative S2 would provide limited groundwater protection, as infiltration would only be somewhat reduced by maintaining the soil cover. Alternative S3 would provide additional groundwater protection, as infiltration would be significantly reduced by the cap, but contaminant releases would still occur from the highly contaminated soils containing potentially mobile NAPLs.

3. Short-term Effectiveness. This factor evaluates the potential short-term adverse impacts of the remedial action upon the community, the workers, and the environment during the construction and/or implementation. The length of time needed to achieve the remedial objectives is also estimated and compared against the other alternatives.

Alternative S1 would have the highest short-term effectiveness, as no further work would be done, but would also not achieve any of the remedial goals for the site. Alternatives S2 and S3 would also have relatively high short-term effectiveness, as the only additional remedial work would be the demolition of the buildings and placement of a soil cover (S2) or cap (S3). Alternative S4, which would involve treatment and/or excavation and disposal of the contaminated soils at the site, would have relatively lower short-term effectiveness, as the potential for releases of contaminants and therefore potential exposures to workers and the community would be higher, and would take longer.

Alternative S1, S2 and S3 would therefore have relatively higher short-term effectiveness than alternative S4, as there would be lower potential for adverse impacts and they could be implemented in less time; however, they would not achieve the remedial goals for the site.

All of the alternatives could be implemented with appropriate engineering controls to protect workers and the community during remedy implementation.

4. Long-term Effectiveness and Permanence. This factor evaluates the long-term effectiveness of the remedial alternatives after implementation. If wastes or treated residuals remain on site after the selected remedy has been implemented, the following items are evaluated: 1) the magnitude of the remaining risks, 2) the adequacy of the controls intended to limit the risk, and 3) the reliability of these controls.

Magnitude of remaining risks

For alternative S1, there would be significant remaining risks as described in Section 4.3.

For alternatives S1, S2, and S3, the risk of contaminant release from the soils in the south end of the eastern raceway to the Hudson River would be significantly higher than for S4, as these soils are immediately adjacent to the river.

For alternative S4, there would not be any significant risks posed by wastes remaining in the soils at the site, as the soils would be treated and/or excavated and disposed off-site.

For alternatives S2 and S3, controls to prevent the direct contact route of exposure to the contaminated soils at the site would be either the soil cover (S2) or the cap (S3). With proper maintenance of these alternatives, the direct contact route of exposure related to the soils would no longer be complete, but the soils would continue to act as a source of contaminants, contributing to the potential groundwater route of exposure.

Adequacy and reliability of controls intended to limit the risks

Alternatives S2, S3, and S4 would address the direct contact pathway, either by soil cover (S2), cap and soil cover (S3), or treatment/disposal(S4). The soil cover or cap would be a reliable control on the direct contact pathway, with the engineered cap being more reliable. The cap would also be more reliable than the soil cover in preventing infiltration through the soils, contributing to the controls on groundwater migration. Alternative S4 would rely less on controls to limit risks posed by the contaminated soils at the site, as the soils would be treated and/or disposed off-site. Alternative S4 would also limit risk via groundwater consumption by eliminating the continued releases of contaminants from the soils into the groundwater.

5. Reduction of Toxicity, Mobility or Volume. This factor recognizes that preference is given to alternatives that permanently and significantly reduce the toxicity, mobility, or volume of the wastes at the site with treatment.

Alternative S1 would not involve additional treatment and would not result in a reduction in toxicity, mobility, and volume through treatment.

The alternative which involve the greatest degree of treatment achieving a reduction in toxicity, mobility, and volume is alternative S4.

Alternatives S2 and S3 would provide no treatment to the contaminated soils. The soil cover alternatives (S2) and the cap and soil cover alternative (S3) would provide a reduction in contaminant mobility, with the cap alternative providing a greater reduction in mobility. These reductions in mobility would not be through treatment.

6. Feasibility. This factor evaluates the suitability of a remedy to site conditions and capability of its being successfully carried out with available technology and considers, at a minimum, implementability and cost-effectiveness. Technical implementability includes the difficulties associated with the construction and the ability to monitor the effectiveness of the remedy. For

administrative implementability, the availability of the necessary personnel and material is evaluated along with potential difficulties in obtaining specific operating approvals, access for construction, *etc*.. Cost-effectiveness is evaluated by comparing overall effectiveness (short-term effectiveness, long-term effectiveness, and reduction of toxicity, mobility and volume through treatment) and cost. An alternative is cost-effective if the overall effectiveness is proportional to cost.

Technical Implementability

All of the alternatives would use conventional construction technologies. The design evaluations in alternative S4 would ensure that the treatment technologies used are implementable for this site.

All of the alternatives would be readily monitored, using standard methodologies.

Administrative Implementability

The necessary material and personnel would be available for all of the remedial alternatives. Approvals for the on-site soil treatment under alternative S4 may also be required.

Cost-Effectiveness.

Capital and operation and maintenance costs are estimated for each alternative and compared on a present worth basis.

As described above, the alternative with the highest long-term effectiveness and permanence is alternative S4. Alternative S4 also has the highest reduction in toxicity, mobility and volume, followed by Alternative S3. Alternatives which do not involve active remediation of the contaminated soils (S1 and S2) have a higher short-term effectiveness than alternative S4. The overall effectiveness of Alternative S4 is the highest, followed by S3 and S2. Alternative S1 would have the lowest overall effectiveness.

The estimated cost of Alternative S4 is higher than S1, S2 or S3. This higher cost is offset, however, by Alternative S4 having a higher overall effectiveness. Therefore, Alternative S4 is cost-effective.

See Appendix E for a description of how the costs were updated for use in this ROD.

The final factor, Community Acceptance, is taken into account after duly considering the above factors and after public comments on the Proposed Remedial Action Plan have been received.

7. <u>Community Acceptance</u> - Concerns of the community regarding the RI/FS reports and the PRAP have been evaluated. The responsiveness summary (Appendix F) presents the public comments received and the manner in which the NYSDEC addressed the concerns raised.

Groundwater Remedial Alternatives

1. <u>Compliance with New York State Standards, Criteria, and Guidance (SCGs)</u>. This factor addresses whether or not a remedy will meet applicable environmental laws, regulations, standards, and guidance.

None of the remedial alternatives would allow the NYSDEC Class GA groundwater standards to be met in the impacted portion of bedrock in the vicinity of the site, since no technology exists at the present time which would allow the complete removal of dense NAPL from the fractured bedrock. Since the dense NAPL will act as a source of contaminants to the bedrock aquifer for the foreseeable future, it is technically impracticable at the present time to completely decontaminate the bedrock aquifer to achieve groundwater standards.

Alternatives G1, G2, and G3 would result in continued releases of PCB and other contaminants to the Hudson River, contributing to the exceedance of the surface water standards in the Hudson River. Although these alternatives would not completely result in meeting surface water standards in the Hudson River, Alternatives G3 would be more effective in preventing contaminant migration to the river than Alternatives G2, which would in turn be more effective in preventing migration than Alternative G1. Alternative G4 is expected to prevent further releases of PCBs from beneath the site to the Hudson River. These releases currently contribute to the exceedance of water quality standards in the Hudson River.

All of the alternatives could be implemented in a manner which would comply with applicable regulations related to community and worker protection.

2. <u>Protection of Human Health and the Environment</u>. This factor is an overall evaluation of the health and environmental impacts to assess whether each alternative is protective.

Alternatives G1, G2, and G3, which do not contain the tunnel and drain groundwater and NAPL control systems, would not be protective of human health and the environment, as releases of PCBs from the site would continue to occur through the discharge of contaminated groundwater and NAPL from the bedrock in the vicinity of the site to the Hudson River. As described in Section 4.3, completed exposure pathways to humans and to biota exist related to these releases, which would result in continued unacceptable exposures to site contaminants. As stated in Section 4.3, people can be exposed to PCBs through ingestion of fish from the Hudson River, which have been contaminated in part from the site.

Alternative G4 which contains the tunnel and drain groundwater and NAPL control systems, would be protective, as the exposure pathways to humans and to biota would no longer be completed.

3. <u>Short-term Effectiveness</u>. This factor evaluates the potential short-term adverse impacts of the remedial action upon the community, the workers, and the environment during the construction and/or implementation. The length of time needed to achieve the remedial objectives is also estimated and compared against the other alternatives.

Alternative G1 would have the highest short-term effectiveness, as no further work would be done, but would also not achieve any of the remedial goals for the site. Alternative G2 would also have high short-term effectiveness, as no additional remedial construction work would be done. Alternative G3 would have relatively higher short-term effectiveness, as there would be lower potential for adverse impacts; however, this alternative would not completely achieve the remedial goals for the site as migration of site contaminants to the Hudson River would not be eliminated. Alternative G4, which includes installation and operation of the tunnel and drain system would take longer to implement than the other alternatives, and pose some additional potential risks to workers.

All of the alternatives could be implemented with appropriate engineering controls to protect workers and the community during remedy implementation.

4. <u>Long-term Effectiveness and Permanence</u>. This factor evaluates the long-term effectiveness of the remedial alternatives after implementation. If wastes or treated residuals remain on site after the selected remedy has been implemented, the following items are evaluated: 1) the magnitude of the remaining risks, 2) the adequacy of the controls intended to limit the risk, and 3) the reliability of these controls.

<u>Magnitude of remaining risks</u>
Under all of the remedial alternatives, wastes would remain at the site.

For alternatives G1, there would be significant remaining risks, as the routes of exposure would not be abated.

For alternatives G2 and G3, which do not involve installation of the tunnel and drain system, the remaining risks would be higher than G4. These risks would be primarily related to the continued releases of PCBs from the bedrock into the Hudson River, which would result in continuing unacceptable exposures to humans and to biota. Alternative G4 would be provide the most control on routes of exposure, with alternatives G3 and G2 providing progressively lesser control on routes of exposure.

<u>Adequacy and reliability of controls intended to limit the risks</u>
As discussed above, all alternatives result in wastes remaining at the site. Only alternative G4 would have adequate controls to limit the risks to the Hudson River. Alternatives

G2 and G3 would result in continued releases to the Hudson River, as discussed above. NYSDOH health advisories for eating sportfish are not completely effective at preventing people from eating fish taken from the Hudson River.

5. Reduction of Toxicity, Mobility or Volume. This factor recognizes that preference is given to alternatives that permanently and significantly reduce the toxicity, mobility, or volume of the wastes at the site with treatment.

Alternative G1 would not involve additional treatment and would not result in a reduction in toxicity, mobility, and volume through treatment. Alternatives G2, G3, and G4 utilize treatment to address the groundwater and NAPL collected in the various control systems. Alternative G4 provides the most treatment, with G3 and G2 providing progressively less treatment.

6. Feasibility. This factor evaluates the suitability of a remedy to site conditions and capability of its being successfully carried out with available technology and considers, at a minimum, implementability and cost-effectiveness. Technical implementability includes the difficulties associated with the construction and the ability to monitor the effectiveness of the remedy. For administrative implementability, the availability of the necessary personnel and material is evaluated along with potential difficulties in obtaining specific operating approvals, access for construction, *etc*.. Cost-effectiveness is evaluated by comparing overall effectiveness (short-term effectiveness, long-term effectiveness, and reduction of toxicity, mobility and volume through treatment) and cost. An alternative is cost-effective if the overall effectiveness is proportional to cost.

Technical Implementability

All of the alternatives would use conventional construction technologies. The tunnel and drain alternative, while an innovative use of technology, would still use conventional tunneling and drilling techniques.

All of the alternatives would be readily monitored, using standard methodologies.

Permitting and authorization issues would have to be addressed for the tunneling work.

Administrative Implementability

The necessary material and personnel would be available for all of the remedial alternatives. Access issues would need to be addressed for work off of the plant property, but should be straightforward. Approvals for the tunneling work may be necessary from the Federal Energy Regulating Commission, as work would need to be done in the vicinity of the Baker's Falls Dam.

Cost-Effectiveness.

Capital and operation and maintenance costs are estimated for each alternative and compared on a present worth basis.

As described above, the alternative with the highest long-term effectiveness and permanence is alternatives G4. Alternative G4 has the highest reduction in toxicity, mobility and volume, through treatment. Alternatives G3 and G2, which would involve less remedial construction activities have progressively higher short-term effectiveness, as the time to construct the remedy would be less, and lower potential for impacts on the community.

The overall effectiveness of Alternatives G4 is the highest, followed by G3 and G2. The estimated cost of Alternative 4 is higher than G3, G2, or G1. This higher cost is offset, however, by Alternative G4 having a higher overall effectiveness. Therefore, Alternative G4 is cost-effective.

The final factor, Community Acceptance, is taken into account after duly considering the above factors and after public comments on the Proposed Remedial Action Plan have been received.

7. <u>Community Acceptance</u> - Concerns of the community regarding the RI/FS reports and the PRAP have been evaluated. The responsiveness summary (Appendix F) presents the public comments received and the manner in which the NYSDEC addressed the concerns raised.

SECTION 8: <u>SUMMARY OF THE SELECTED REMEDY</u>

Operable Unit 2A - Overburden Soils

Based upon the results of the RI/FS and upon the evaluation presented in Section 7, the NYSDEC has selected Alternative S4 (Soil Treatment/Disposal) as the remedy for the Operable Unit 2A of the GE Hudson Falls Plant Site, #558013. The selected remedy will eliminate or mitigate, through the proper application of scientific and engineering principles, all significant threats to public health and the environment presented by the hazardous wastes disposed at the site.

This selection is based upon the findings that the remedy would be protective of human health and the environment, and would eliminate the soils as a source of contaminants contributing to the exceedance of groundwater standards. Alternative S4 also has acceptable short-term effectiveness, good long-term effectiveness and permanence, is implementable, and is cost-effective.

Alternatives S1, S2 and S3 are not protective of human health and the environment and would not comply with SCGs. Under each of these alternatives (to varying degrees), the contaminated soils at the site would continue to be a source of contaminants to the groundwater, contributing to continuing violations of groundwater standards and resulting in significant environmental damage, as discussed above in Section 4.

Alternative S4 will have the highest long term effectiveness and the greatest reduction in toxicity, mobility or volume through treatment. The other alternatives which involve less active

remedial work would have progressively higher short term effectiveness, but would not meet the remediation goals for the site.

The soil treatment/disposal alternative in this ROD differs from the alternative in the 2003 PRAP. The Department modified this remedial alternative in response to comments during the public comment period that the excavation and treatment of surficial soils to prevent direct contact human health exposures was redundant, as the alternative also included the installation of an engineered soil cover at the site. The Department has concluded that the engineered soil cover will abate the potential for direct contact human health exposures at the site, and has omitted the excavation and treatment of surficial soils from alternative S4, resulting in a change in estimated soil volume from 27, 100 to 23,900 cubic yards and a change in estimated cost from $36.5 million to $35 million.

The estimated present worth cost to implement the overburden Operable Unit 2A (soils) remedy is $ 34,985,000. The cost to construct the remedy is estimated to be $ 32,016,000, and the estimated average annual operation and maintenance cost for the project is $ 239,000.

The elements of the selected remedy for Operable Unit 2A (soils) are as follows:

1. A remedial design program to verify the components of the conceptual design and provide the details necessary for the construction, operation and maintenance, and monitoring of the remedial program. Any uncertainties identified during the RI/FS would be resolved.

2. Buildings 1, 1A, 2, 3, and 4 would be decommissioned prior to demolition.

3. Buildings 1, 1A, 2, 3, and 4 would be demolished. Hazardous demolition debris would be disposed off-site.

4. Cleanup of contaminated soils would be accomplished as follows:

   Detailed design analyses would be performed, including technology demonstration projects, of applicable treatment technologies. These detailed design analyses would be performed to allow the Department to approve a specific treatment technology, or set of technologies, which will result in the soils at the site meeting the site soil cleanup level to protect groundwater.

   The detailed design analyses would also include testing to determine the site specific parameters (mixtures of chemicals present, solubility, partitioning coefficients, soil organic carbon content, attenuation mechanisms) which impact the calculations of soil cleanup level to protect groundwater. These parameters will be gathered during remedial design to allow for calculation of the final soil cleanup levels for the site. This soil cleanup levels will be calculated using the site specific data and using the approach defined in TAGM 4046 to protect groundwater.

5. Treatment and/or disposal of the contaminated soils at the site which exceed the site specific soil cleanup levels to protect groundwater. Soils which are not amenable to treatment due to technology limitations, or which can not be feasibly treated to the site cleanup levels, will be considered for off site disposal at a properly permitted facility.

6. Establishment of a vegetated, engineered soil cover (minimum one foot thick, with a demarcation layer at the base) over the entire site.

7. As specified in Appendix B, implementation of a Declaration of Limited Use and Restrictions, which restricts the site to industrial or commercial uses only, and prohibits the extraction of groundwater for other than remedial purposes. Appendix B also includes institutional and engineering controls, including a soil management plan, site access restrictions, and deed notification, and an annual certification that the institutional and engineering controls are in place and effective.

8. Since the remedy results in untreated hazardous waste remaining at the site, a long term monitoring program would be instituted. This program would allow the effectiveness of the selected remedy to be monitored and would be a component of the operation and maintenance for the site.

9. Performance of annual remedial program effectiveness reviews to determine if the remedy is still protective of human health and the environment.

Operable Units 2B, 2C, and 2D - Overburden and Bedrock Groundwater

Based upon the results of the RI/FS and upon the evaluation presented in Section 7, the NYSDEC has selected Alternative G4 (Enhancement of Existing Remedial System with Tunnel and Drain System) as the remedy for Operable Units 2B, 2C and 2D of the GE Hudson Falls Plant Site, #558013. The selected remedy will eliminate or mitigate, through the proper application of scientific and engineering principles, all significant threats to public health and the environment presented by the hazardous wastes disposed at the site.

This selection is based upon the findings that the remedy will be protective of human health and the environment, would eliminate the site as a source of contaminants contributing to the exceedance of surface water standards in the Hudson River, and as a source of contaminants contributing to the need to recommend that human consumption of biota be limited. Alternative G4 also has acceptable short-term effectiveness, the highest long-term effectiveness and permanence, is implementable, and is cost-effective.

Alternatives G1, G2, and G3 would not be protective of human health and the environment. Under each of these alternatives (to varying degrees), the site would continue to be a source of contaminants to the Hudson River, where there are completed exposure pathways to humans and biota resulting in unacceptable exposures. Under Alternative G1 (the No Action

alternative), use of the existing groundwater and DNAPL collection and treatment system would be terminated, allowing contaminants to migrate to the river. Under Alternative G2, the existing groundwater and DNAPL collection and treatment system would continue to operate as is, which is not completely effective in preventing the migration of contaminants to the river. Under Alternative G3, the groundwater and DNAPL collection and treatment system would enhanced with additional bedrock recovery wells and would be more effective than the existing system in controlling contaminant migration, but would still allow some contaminants to migrate into the river.

Alternative G4 will have to highest long term effectiveness and permanence, and will provide the greatest reduction of toxicity, mobility or volume through treatment. Alternatives G3, G2 and G1 would provide progressively lower degrees of long term effectiveness and permanence as well as progressively lesser reduction of toxicity, mobility or volume through treatment. Alternatives G3 and G2, which would involve less remedial construction activities have progressively higher short-term effectiveness, as the time to construct the remedy would be less, and lower potential for impacts on the community.

The estimated present worth cost to implement the groundwater (Operable Unit 2B-2D) remedy is $ 29,982,000. The cost to construct the remedy is estimated to be $ 13,060,000 and the estimated average annual operation and maintenance cost for the project is $ 1,353,000.

The elements of the selected groundwater (Operable Unit 2B-2D) remedy are as follows:

1. A remedial design program to verify the components of the conceptual design and provide the details necessary for the construction, operation and maintenance, and monitoring of the remedial program. Any uncertainties identified during the RI/FS would be resolved.

2. Enhancement of the existing groundwater and DNAPL management system by installation and operation of a tunnel and drain system constructed along the western portion of the site, adjacent to and beneath the Hudson River, to prevent migration of contaminated groundwater and DNAPL from the site to the river. The operation of the enhanced remedial system would be designed to minimize the migration of site contaminants to all off site areas, including the Hudson River.

   The final layout and dimensions of the tunnel will be determined in design, and will be designed to prevent the migration of all site-related contaminants to the Hudson River. The spacing of the vertical drain wells will be evaluated in remedial design, and will be determined based upon testing during construction to ensure that the spacing is sufficiently close to ensure that contaminated groundwater and NAPL will be prevented from entering the Hudson River from the site.

3. Expansion of the wastewater treatment plant at the site to manage the additional wastewater generated at the site. Discharges from the plant would meet the substantive requirements of a State Pollution Discharge Elimination System (SPDES) permit.

4. As specified in Appendix B, implementation of a Declaration of Limited Use and Restrictions, which restricts the site to industrial or commercial uses only, and prohibits the extraction of groundwater for other than remedial purposes. Appendix B also includes institutional and engineering controls, including a soil management plan, site access restrictions, and deed notification, and an annual certification that the institutional and engineering controls are in place and effective.

5. Since the remedy results in untreated hazardous waste remaining at the site, institution of a long term monitoring program. This program would allow the effectiveness of the selected remedy to be monitored and would be a component of the operation and maintenance for the site. It would include groundwater sampling from monitoring wells and private wells, biota sampling, and surface water sampling as a means of evaluating the efficacy of the remedy. Remedy reviews would occur every five years to ensure that the remedy continues to perform as designed, and to determine if technology or other developments have progressed to allow standards to be met.

6. Performance of annual remedial program effectiveness reviews to determine if the remedy is still protective of human health and the environment.

Table 1: Nature and Extent of Contamination

Ground Water, Surface Water, and Soil PCB Analytical Results Summary

MEDIA	CLASS	CONTAMINANT OF CONCERN	MAXIMUM CONCENTRATION (ppb for water, ppm for soil)	SCG (ppb for water, ppm for soils)
Ground water	Polychlorinated Biphenyls	PCB Aroclor 1016	1,160	0.09**
		PCB Aroclor 1221	479	0.09**
		PCB Aroclor 1232	158	0.09**
		PCB Aroclor 1242	2,100,000	0.09**
		PCB Aroclor 1248	212	0.09**
		PCB Aroclor 1254	74,000	0.09**
		PCB Aroclor 1260	0.211	0.09**
Surface Water	Polychlorinated Biphenyls	Total PCB	3,930	1×10^{-6}***
Soils	Polychlorinated Biphenyls	PCB Aroclor 1016	0.029	1/10*
		PCB Aroclor 1221	ND	1/10*
		PCB Aroclor 1232	ND	1/10*
		PCB Aroclor 1242	250,000	1/10*
		PCB Aroclor 1248	2,000	1/10*
		PCB Aroclor 1254	40,000	1/10*
		PCB Aroclor 1260	40	1/10*

*The SCG in soil for PCB, as described in TAGM 4046, is 1 part per million total PCB in surface soils, and 10 parts per million total PCB in subsurface soils. The site specific cleanup level for PCB in this PRAP is to calculated during remedial design.
**Total PCBs.
***There are three surface water standards for PCB. The most stringent is the standard to protect human consumers of fish is 1×10^{-6} ppb. The standard to protect wildlife is 1.2×10^{-4} ppb. The standard to protect sources of water supply is 0.09 ppb. See the NYSDEC Division of Water Technical and Operational Guidance Series (1.1.1) for a definition of water classes and type.

Table 1 (continued)

Ground Water VOC Analytical Results Summary

MEDIA	CLASS	CONTAMINANT OF CONCERN	MAXIMUM CONCENTRATION (ppb for water, ppm for soil)	SCG (ppb for water, ppm for soils)
Ground Water	VOCs	Acetone	1,000 B	50
		Benzene	136	1
		Bromodichloromethane	9.5	50
		Bromomethane	110 BJ	5
		2-Butanone	22	50
		Carbon Disulfide	30	50
		Carbon Tetrachloride	254	5
		Chlorobenzene	340	5
		Chloroethane	40 J	5
		Chloroform	4,000 J	7
		Chloromethane	1.5 J	5
		Dibromochloromethane	2 J	50
		1,2-Dichlorobenzene	16	3
		1,3-Dichlorobenzene	16	3
		1,4-Dichlorobenzene	59 J	3
		1,1-Dichloroethane	8,200	5
		1,2-Dichloroethane	2.6	0.6
		1,1-Dichloroethene	2,300	5

Table 1 (continued)
Ground Water VOC Analytical Results Summary (continued)

MEDIA	CLASS	CONTAMINANT OF CONCERN	MAXIMUM CONCENTRATION (ppb for water, ppm for soil)	SCG (ppb for water, ppm for soils)
Ground Water	VOCs	1,2-Dichloroethene (total)	86,000 VD	5
		cis-1,2-Dichloroethene	120,000	5
		cis-1,3-Dichloropropene	ND	0.4
		trans-1,2-Dichloroethene	13,000	5
		trans-1,3-Dichloropropene	10	0.4
		Ethylbenzene	1.3	5
		2-Hexanone	23 J	50
		4-Methyl-2-Pentanone	17 J	50
		Methylene Chloride	800	5
		Styrene	ND	5
		1,1,2,2-Tetrachloroethane	6 J	5
		Tetrachloroethene	120	0.7
		Toluene	3,000	5
		Trichlorofluoromethane	ND	5
		1,2,3-Trichlorobenzene	5.63	5
		1,2,4-Trichlorobenzene	26.9	5
		1,1,1-Trichloroethane	16,000	5
		1,1,2-Trichloroethane	9.7	1
		Trichloroethene	130,000 D	5
		Vinyl Chloride	38,000	2
		m-p-Xylenes	1.4 J	5
		o-Xylenes	ND	5
		Xylenes (total)	9 Y	n/a

Table 1 (continued)
Soil VOC Analytical Results Summary

MEDIA	CLASS	CONTAMINANT OF CONCERN	MAXIMUM CONCENTRATION (ppb for water, ppm for soil)	SCG (ppb for water, ppm for soils)
Soil	VOCs	Acetone	2.5 B	0.2
		Benzene	0.49 J	0.06
		Bromodichloromethane	ND	n/a
		Bromomethane	0.0072 J	n/a
		2-Butanone	0.3	0.3
		Carbon Disulfide	0.024 J	2.7
		Carbon Tetrachloride	ND	0.6
		Chlorobenzene	7	1.7
		Chloroethane	ND	1.9
		Chloroform	0.006 B	0.3
		Chloromethane	1.2 J	n/a
		Dibromochloromethane	ND	n/a
		1,2-Dichlorobenzene	3.1 J	7.9
		1,3-Dichlorobenzene	0.18	1.6
		1,4-Dichlorobenzene	0.31	8.5
		1,1-Dichloroethane	2.5 J	0.2
		1,2-Dichloroethane	ND	0.1
		1,1-Dichloroethene	0.92 J	0.4

Table 1 (continued)

Soil VOC Analytical Results Summary (continued)

MEDIA	CLASS	CONTAMINANT OF CONCERN	MAXIMUM CONCENTRATION (ppb for water, ppm for soil)	SCG (ppb for water, ppm for soils)
Soil	VOCs	1,2-Dichloroethene (total)	5.4	n/a
		cis-1,2-Dichloroethene	410	n/a
		cis-1,3-Dichloropropene	0.006 J	n/a
		trans-1,2-Dichloroethene	21	0.3
		trans-1,3-Dichloropropene	ND	n/a
		Ethylbenzene	0.81	5.5
		2-Hexanone	0.046 BJ	n/a
		4-Methyl-2-Pentanone	ND	1.0
		Methylene Chloride	4.45	0.1
		Styrene	1.5	n/a
		1,1,2,2-Tetrachloroethane	2.8	0.6
		Tetrachloroethene	7.6 J	1.4
		Toluene	3.7	1.5
		Trichlorofluoromethane	0.0017	n/a
		1,2,3-Trichlorobenzene	ND	n/a
		1,2,4-Trichlorobenzene	ND	3.4
		1,1,1-Trichloroethane	35.55	0.8
		1,1,2-Trichloroethane	0.0071 J	n/a
		Trichloroethene	340	0.7
		Vinyl Chloride	7.3	0.2
		m-p-Xylenes	0.022 J	n/a
		o-Xylenes	0.012 J	n/a
		Xylenes (total)	2.3	1.2

Table 1 (continued)

Ground Water SVOC Analytical Results Summary

MEDIA	CLASS	CONTAMINANT OF CONCERN	MAXIMUM CONCENTRATION (ppb for water, ppm for soil)	SCG (ppb for water, ppm for soils)
Ground Water	SVOCs	Acenaphthene	5 J	20
		Acenaphthylene	ND	50
		Anthracene	ND	50
		Benzo(a)anthracene	ND	0.002
		Benzo(a)pyrene	ND	ND
		Benzo(b) fluoroanthene	ND	0.002
		Benzo(g,h,i)perylene	ND	50
		Benzo(k)fluoranthene	ND	0.002
		Benzoic Acid	30 J	50
		Bis(2-ethylhexyl) phthalate	1,100,000	5
		Butylbenzylphthalate	34	50
		Chrysene	ND	0.002
		Di-n-butylphthalate	13	50
		Di-n-octylphthalate	2 J	50
		1,2-dichlorobenzene	5,000 J	3
		1,3-dichlorobenzene	5,000 J	3
		1,4-dichlorobenzene	11,000 J	3
		Dibenzo(a,h)anthracene	ND	50
		Diethylphthalate	0.5 JB	50
		Fluoranthene	ND	50
		Fluorene	2 J	50
		Indeno(1,2,3-cd)pyrene	ND	0.002
		2-Methylnaphthalene	2J	50

Table 1 (continued)

Ground Water SVOC Analytical Results Summary (continued)

MEDIA	CLASS	CONTAMINANT OF CONCERN	MAXIMUM CONCENTRATION (ppb for water, ppm for soil)	SCG (ppb for water, ppm for soils)
Ground Water	SVOCs	4-Methylphenol	40	1
		Naphthalene	10 J	10
		n-Nitrosodimethylamine	140 J	50
		n-Nitrosodiphenylamine	0.5 J	50
		Phenanthrene	190 J	50
		Phenol	16 J	1
		Phenyl xylyl ethane	260,000	50
		Pyrene	2 J	50
		1,2,4-Trichlorobenzene	69,000	5

Table 1 (continued)

Soil SVOC Analytical Results Summary

MEDIA	CLASS	CONTAMINANT OF CONCERN	MAXIMUM CONCENTRATION (ppb for water, ppm for soil)	SCG (ppb for water, ppm for soils)
Soil	SVOCs	Acenaphthene	1.2	50
		Acenaphthylene	0.11 J	41
		Anthracene	11	50
		Benzo(a)anthracene	2	0.224
		Benzo(a)pyrene	2.1	0.061
		Benzo(b) fluoroanthene	2.8	1.1
		Benzo(g,h,i)perylene	1.9	50
		Benzo(k)fluoranthene	1.7	1.1
		Benzoic Acid	ND	n/a
		Bis(2-ethylhexyl) phthalate	25,000	50
		Butylbenzylphthalate	0.51	50
		Chrysene	15	0.4
		Di-n-butylphthalate	130	8.1
		Di-n-octylphthalate	0.17 J	50
		1,2-dichlorobenzene	0.45 J	n/a
		1,3-dichlorobenzene	2.7 J	n/a
		1,4-dichlorobenzene	29	n/a
		Dibenzo(a,h)anthracene	0.54	0.014
		Diethylphthalate	0.073 J	7.1
		Fluoranthene	6	50
		Fluorene	1.6	50
		Indeno(1,2,3-cd)pyrene	1.7	0.41
		2-Methylnaphthalene	0.6	36.4

Table 1 (continued)

Soil SVOC Analytical Results Summary (continued)

MEDIA	CLASS	CONTAMINANT OF CONCERN	MAXIMUM CONCENTRATION (ppb for water, ppm for soil)	SCG (ppb for water, ppm for soils)
Soil	SVOCs	4-Methylphenol	ND	0.9
		Naphthalene	1.2	13
		n-Nitrosodimethylamine	ND	n/a
		n-Nitrosodiphenylamine	ND	n/a
		Phenanthrene	4.6 D	50
		Phenol	1.3	0.03
		Phenyl xylyl ethane	ND	n/a
		Pyrene	4.8	50
		1,2,4-Trichlorobenzene	220	n/a

Notes:
ND - Not Detected
J - Estimated Value
B - Compound also detected in blank
C - Compound ID confirmed by GC/MS
D - Identified at secondary dilution factor
V - Estimated value due to quality control variance
X - Compound positively identified
Y - Not calculated

Table 2: Summary of Alternative Costs

Alternative	Capital	Annual O&M	Total Present Worth Cost
S1	$ 182,000	$ 125,000	$ 2,110,000
S2	$ 9,615,000	$ 244,000	$ 12,647,000
S3	$ 11,633,000	$ 244,000	$ 14,655,000
S4	$ 32,016,000	$ 239,000	$ 34,985,000
G1	$ 0	$0	$0
G2	$ 0	$ 927,000	$ 11,545,000
G3	$ 4,271,000	$ 1,531,000	$ 23,263,000
G4	$ 13,060,000	$ 1,353,000	$ 29,982,000

Note: Engineering cost estimates are accurate to +50% / -25%. The actual costs would likely vary from those estimated here, depending on the specific technologies used as specified in the detailed remedial designs.

Appendix A

List of Remedial Investigation Reports
GE Hudson Falls Plant Site, #558013

Dames & Moore, 1996. *Overburden Remedial Investigation Report, Operable Units 2A and 2B*, December 20, 1996.

Dames & Moore, 1997. *Bedrock Remedial Investigation Report, Operable Units 2C & 2D*, October 31, 1997.

Dames & Moore, 1998. *Bedrock Remedial Investigation Report, Addendum I, Eastern Investigation*, March 23, 1998.

GeoTrans, 2001. *Bedrock Remedial Investigation Report Operable Units 2C and 2D, Addendum II*, March 2, 2001.

HSI GeoTrans, 1999. *1998 Hydrogeologic Summary Report and 1999 Work Plan, Hudson Falls Plant Site, Hudson Falls, New York*, February 23, 1999.

Appendix B

Restrictions on future use of the GE Hudson Falls Plant Site, #558013

Appendix B: Restrictions for Future Use of the GE Hudson Falls Plant Site, #558013

1. On-site Excavation or Disposal of Soils is Prohibited. There shall be no excavation of soils at the facility or removal of soil from the site until such time that the NYSDEC has approved a Soil Management Plan.

a. Soil Management Plan. At any time, the proponent of such onsite excavation or disposal of soils ("proponent") may submit to the NYSDEC for review and approval, a plan that describes procedures for soil excavation and removal of soils from the facility. The plan shall be designed to protect human health and the environment. Until this plan is approved, no excavation or soil removal is allowed. Should the proponent decide to submit a Soil Management Plan, at minimum the plan shall include:

i. Soil sampling. Include appropriate practices, protocols, and procedures for sampling soils to determine the concentration of contaminants.

ii. Health and Safety Plan. The plan shall describe the health and safety requirements and general procedures to be followed during the excavation of soils. The plan shall be designed to minimize the possibility that personnel at the facility and the surrounding community will be injured or exposed to site contaminants during excavation of such soils.

iii. Off-Site Disposal. Should soil be disposed off-site, the plan shall include a hazardous waste determination to verify whether deposition into a secure hazardous waste landfill or a solid waste landfill is necessary.

iv. Implementation. The proponent may implement the Soil Management Plan at any time after NYSDEC approval.

2. Declaration of Limited Use and Restrictions. No later than **thirty (30)** days after the effective date of Record of Decision for this site, GE, or the owner of the site at that time, as the case may be, shall submit to the NYSDEC for review and approval a declaration of limited use and restrictions, to run with the land, that will in perpetuity notify any potential purchasers of the property of the contamination present at the property. At a minimum, the language of such declaration shall include provisions that:

a. State that soils with elevated levels of PCBs and other contaminants is being left in place on-site and that this contamination may pose an unacceptable health risk should the soil be improperly handled, managed or disposed.

b. Limit the land parcel to industrial or commercial use only without specific approval from the New York State Departments of Environmental Conservation and Health.

c. Prohibit the extraction of water from beneath the surface of the premise other than for remedial purposes without specific approval from the New York State Departments of Environmental Conservation and Health.

d. Notify future land owners, that under the authority of the New York State

Department of Environmental Conservation, an existing hazardous waste remedial program is ongoing to address the on-site and off-site contamination in soils, surface water and groundwater.

e. Prohibit the excavation and removal of soils at the facility or removal of soil from the facility unless undertaken in accordance with a NYSDEC-approved Soil Management Plan submitted to the NYSDEC by the proponent that describes procedures for soil excavation and removal of soils from the facility and that are designed to protect human health and the environment. At a minimum, such a plan shall include:

i. protocols and procedures for sampling soils to determine the concentration of contaminants.

ii. a description of the health and safety requirements and general procedures to be followed during the excavation of soils. The plan shall be designed to minimize the possibility that personnel at the facility and the surrounding community will be injured or exposed to site contaminants during excavation of such soils.

iii. should soil be disposed off-site, a hazardous waste determination to verify whether deposition into a secure hazardous waste landfill or a solid waste landfill is necessary.

The proponent may implement the Soil Management Plan at any time after NYSDEC approval.

The instrument shall be recorded and filed with the Washington County Clerk, and proof of recording and filing shall be submitted to the NYSDEC within **thirty (30)** days of the Department's approval of the language of such declaration.

Appendix C

Administrative Record

Appendix C - Administrative Record

- Demolition of Buildings 8, 9, and 10. Project schedule and summary of contract special conditions, General Electric Company, Hudson Falls, New York (w/addendum)
  April 1986, Blasland & bouck Engineers, P.C.

- General Electric Company, Field Investigation Proposal, Hudson Falls, New York
  October 1986, Geraghty & Miller, Inc.

- Field Investigation of the General Electric Company, Hudson Falls Plant, Hudson Falls, New York (Report
  July 1987, Geraghty & Miller, Inc.

- Transportation Project Report, PIN 1751.35.122, Fenimore Bridge over the Hudson River, BIN 3-30643-0, Saratoga an Washington Counties, Design Report/Environmental Assessment
  February 1988, NYSDOT

- Field Investigation Work Plan, General Electric Company, Hudson Falls Plant, Hudson Falls, New York
  April 1988, Dunn Geoscience

- Field Investigation Work Plan, General Electric Company, Hudson Falls Plant, Hudson Falls, New York
  September 1988, Dunn Geoscience

- Site Investigation Report, GE Company, Hudson Falls Plant
  October 1989, Dunn Geoscience

- Work Plan for Additional Site Investigation and Feasibility Study, General Electric Company, Hudson Falls Plant
  March 5, 1990, Dunn Geoscience

- Report on Additional PCB Soil Sampling at GE, Hudson Falls Plant Site (letter report)
  April 12, 1991, Dunn Geoscience

- First Phase Feasibility Study, General Electric Company, Hudson Falls Facility
  December 1991, Dunn Geoscience

- Adirondack Hydro Development Corporation, Hudson Falls, Hydroelectric Project, Geotechnical Site Visit, Trip Report and Photographs
  March 2-3, 1992, Adirondack Hydro Development Corporation

- Feasibility Study, General Electric Company, Hudson Falls Facility
  August 1992, Dunn Geoscience

- Sanitary Basin Closure Report, General Electric Company, Hudson Falls, New York Facility, John Street, Hudson Falls, New York 12839, Washington County
  March 4, 1993, Dunn Geoscience

- Revised Work Plan, Subsurface Investigation, General Electric Company, Hudson Falls Plant Site, Hudson Falls, New York
  March 10, 1993, Dunn Geoscience

- Health and Safety Plan, Bakers Falls Remedial Investigation/Feasibility Study
  April 1993

- Revised Work Plan, Subsurface investigation, General Electric Hudson Falls Plant Site, Hudson Falls, New York
  April 14, 1993, Dunn Geoscience

- Pipe Prioritization Summary, General Electric Company, Hudson Falls, New York
  May 3, 1993

- Revised Work Plan, Subsurface Investigation, General Electric Hudson Falls Plant Site, Hudson Falls, New York
  May 6, 1993, Dunn Geoscience

- Subsurface Investigation Sampling and Analysis Plan, General Electric Hudson Falls Plant Site
  May 6, 1993, Dunn Geoscience

- Monthly Progress Summary Report, General Electric Hudson Falls Facility, Hudson Falls, New York
  May 7, 1993

- Subsurface Investigation Field Health and Safety Plan, General Electric Hudson Falls Plant, Hudson Falls, New York
  May 10, 1993, Dunn Geoscience

- Draft Work Plan, Baker Falls Operable Unit 3, Sediment Removal and Seepage Collection Interim Remedial Measure
  June 1993, O'Brien and Gere Engineers

- Draft Field Sampling Plan, Bakers Falls RE/FS, Operable Unit 3
  June 1993, O'Brien & Gere Engineers

- Hudson Falls Hydroelectric Project, Plan for non-Disturbance of PCB Contaminated Sediments and Maintenance of Existing Conditions
  June 11, 1993; Adirondack Hydro Development Corporation

- Field Sampling Plan, Bakers Falls Remedial Investigation/ Feasibility Study, Operable Unit 3
  July 1993, O'Brien & Gere Engineers

- Design Memorandum, Phase I, Temporary Seepage Collection, Bakers Falls Operable Unit 3, IRM
  July 1993, O'Brien & Gere Engineers

- Supplemental Soil Boring Work Plan to Revised Subsurface Investigation work Plan, GE Hudson Falls Plant Site
  August 1993, Dunn Geoscience

- Operable Unit No. 1 Remediation, Citizen Participation Plan, Hudson Falls Plant, ID #558003
  August 1993, Dunn Geoscience

- Technical Specifications, Bakers Falls, Operable Unit 3 Interim Remedial Measure, Phase 2, Sediment Removal and Disposal, Contract No. 1
  August 1993, Dunn Geoscience

- Contract Plans Specifications, Contract No. 1 Operable Unit No. 1 Remediation, Hudson Falls Plant, ID#558013, Hudson Falls, New York
  August 1993, Dunn Geoscience

- Operable Unit 1, Remedial Plan, Hudson Falls Plant, ID#558013, Hudson Falls, New York
  August 24, 1993, Dunn Geoscience

- Operable Unit No. 1, Remediation, Field HASP, Hudson Falls Plant, ID #558013, Hudson Falls, New York
  August 24, 1993, Dunn Geoscience

- Statement of Qualifications for Risk Assessment Services
  August 25, 1993, Chem Risk

- Supplemental Soil Boring Work Plan to Revised Subsurface Investigation Work Plan, GE Hudson Falls Plant Site
  August 25, 1993 Dunn Geoscience

- Supplemental Monitoring Well Installation Work Plan to Revised Subsurface

Investigation Work Plan, General Electric Hudson Falls Plant Site
September 10, 1993, Dunn Geoscience

- Work Plan, Bakers Falls Operable Unit 3 Feasibility Study
  September 1993, O'Brien & Gere Engineering

- Ambient Air Sampling Work Plan, bakers Falls Operable Unit 3 Interim Remedial Measure
  September 1993, O'Brien & Gere Engineers

- Work Plan for Bakers Falls Operable Unit 3, Phase II - Interim Remedial Measure, General Electric CEP
  September 16, 1993 OHM Corporation

- Site Specific HASP, Site Remediation: Operable Unit #1, General Electric Company, Hudson Falls, Plant, ID #558013
  October 1993 Franklin Environmental Services

- Operable Unit No. 1 Remediation Field Health and Safety Plan, Hudson Falls Plant, ID #558013, Hudson Falls, New York
  October 26, 1993 Dunn Geoscience

- Operable Unit No. 1, Remedial Plan, Hudson Falls Plant, ID #558013, Hudson Falls, New York
  October 26, 1993, Dunn Geoscience

- Shoring Plan Design Calculations for Operable Unit No. 1 Remediation, General Electric Company, Hudson Falls, New York
  October 29, 1993, Canon Engineering, Inc.

- Operation and Maintenance Manual, Temporary Seepage Collection and Water Pretreatment System, Hudson Falls Site Operable Unit #3, Phase I Interim Remedial Measure
  November 1993, O'Brien & Gere Engineers

- Pipe and Conduct Investigative Summary Report, General Electric Company, Hudson Falls, New York
  November 10, 1993, Dunn Geoscience

- Specifications, Operable Unit No. 2, Interim Remedial Measure No. 1, Hudson Falls Plant, ID #558013, Hudson Falls, New York
  November 26, 1993, Dunn Geoscience

- Pipe and Conduct Remedial Action Plan, General Electric Company, Hudson Falls, New

York
November 26, 1993, Dunn Geoscience

- Risk Assessment Statement of Work for Operable Units #2 and #3 of the General Electric Site in Hudson Falls, New York
  December 9, 1993 Cehm Risk

- Report, Bakers Falls Remedial Investigation, Perable Unit 3 (w/appendix)
  January 1994 O'Brien & Gere Engineers

- Specifications, Operable Unit No. 2, Interim Remedial Measure No. 1, Pipe IRM Hudson Falls Plans, ID #558013, Hudson Falls, New York
  February 24, 1994, Dunn Geoscience

- Manufacturers Operation & Maintenance Manuals, Hudson Falls IRM, Operable Unit 3, Long-Term Seepage Collection and Water Pre-Treatment System
  April 1994, O'Brien & Gere Engineers

- Interim Remedial Investigation Report, Operable Unit #2, General Electric Hudson Falls Facility, Hudson Falls, NY
  April 8, 1994, Dunn Geoscience (4 Volumes)

- Technical Specifications, Hudson Falls, Operable Unit 3, Interim Remedial Measure, Tailrace Tunnel, Sediment Removal and Disposal
  June 1994, O'Brien & Gere Engineers

- Cleaning and Video Inspection of the Sumpter Street Sanitary Sewer Pipe, Sumpter Street Sewer IRM, General Electric Company, Hudson Falls, New York
  June 1, 1994 Dunn Geoscience

- Remedial Investigation Work Plan, General Electric Company, Hudson Falls, New York
  June 3, 1994 Dames & Moore

- Field Sampling Plan, Addendum No. 1, Hudson Falls Site (Bakers Falls) RI/FS, Operable Unit 3
  July 7, 1994

- Hudson Falls Hydroelectric Project, Erosion and Sediment Control Plan and PCB Non-disturbance Plan
  July 29, 1994 American Hydro Development Corporation

- Project Submittal, Hudson Falls Operable Unit 3, Interim Remedial Measure, Tailrace Tunnel Sediment Removal and Disposal

August 11, 1994 Sevenson Environmental Services

- Hudson Falls Site, Revised BODR and Form 2D, Wastewater Treatment Plant
  August 25, 1994 O'Brien & Gere Engineers

- Remedial Investigation (Addendum I) Work Plan, General Electric Company, Hudson Falls New York
  September 28, 1994 Dames & Moore

- Operable Unit No. 2, Pipe IRM Summary Report, General Electric Company, Capping Production Division, Hudson Falls, New York
  September 30, 1994 Dunn Geoscience

- IRM Work Plan, Installation of a Sanitary Sewerline along the West side of Sumpter Street, General Electric Hudson Falls (letter proposal)
  October 24, 1994 General Electric

- North and South Basin tank lining plans, details and specifications, Hudson Falls water Treatment Plant
  October 25, 1994, O'Brien & Gere Engineers (letter submittal)

- Bedrock Remedial Investigation and Groundwater Recovery Pilot Program Work Plan, General Electric Company, Hudson Falls, New York
  January 16, 1995 Dames & Moore

- Glens Falls Limestone Investigation Work Plan, General Electric Company, Hudson Falls, New York
  February 17, 1995 Dames & Moore

- Beekmantown Group Investigation Work Plan, General Electric Company, Hudson Falls, New York
  March 30, 1995 Dames & Moore

- Work Plan, Hudson Falls Site, Operable Unit 3, Lower Raceway, IRM General Electric Company CEP
  June 1995 O'Brien & Gere Engineers

- Work Plan, Overburden RI and Groundwater Recovery Pilot Program, General Electric Company, Hudson Falls, NY
  July 26, 1995, Dames & Moore

- Update on Phased Start-up Plan, New Water Treatment Plant, Approved IRM, Consent Order #A5-0928-03, General Electric Hudson Falls, New York
  December 13, 1995, General Electric

- Final Report Hudson Falls Private well sampling and Publice Water Connection, General Electric CEP
  January 1996 O'Brien & Gere

- Plans & Specifications, Piping System, OB Dewatering Pilot Program, General Electric Company, Hudson Falls, New York
  February 13, 1996, Dames & Moore

- Overburden Dewatering Pilot Program Schedule, General Electric Company, Hudson Falls, New York
  March 12, 1996, Dames & Moore (letter submittal)

- Bakers Falls Observation Plan, General Electric Company, Hudson Falls, New York
  July 17, 1996 Dames & Moore

- Hudson Falls Operable Unit 3 Interim Remedial Measure, Summary Report
  July 1996, O'Brien & Gere Engineers

- Bedrock groundwater RI work Plan Addendum II; overburden groundwater recovery pilot program Addendum IV, Operable Units 2B and 2C, General Electric Company, Hudson Falls, New York
  October 11, 1996

- Overburden Remedial Investigation Report, Operable Units 2A and 2B, General Electric Company, Hudson Falls, New York
  December 20, 1996 Dames & Moore (3 volumes)

- Feasibility Study for Overburden Soil and Groundwater Operable Units 2A and 2B, General Electric Company, Hudson Falls, NY
  January 15, 1997
  Dames & Moore

- Tailrace Tunnel Progress Report, General Electric Company, Hudson Falls, New York
  April 15, 1997 Dames & Moore

- Hydraulic Containment Status Report, General Electric Company, Hudson Falls, New York
  April 22, 1997, Dames & Moore

- Bedrock Remedial Investigation Report Operable Units 2C and 2D, General Electric Company, Hudson Falls, New York
  October 21, 1997, Dames & Moore (5 volumes)

- Hudson Falls Residential Well Sampling and Public Water Connection Report

January 1998 O'Brien & Gere Engineers

- Quarterly Hydraulic Containment Status Report, Fourth Quarter 1997, General Electric Company, Hudson Falls, New York
  March 6, 1998 Dames & Moore

- Bedrock Remedial Investigation Report, Addendum 1 - Eastern Investigation General Electric Company, Hudson Falls, New York
  March 23, 1998 Dames & Moore (w/ 6 attachments)

- "1998 Hydrogeologic Summary Report and 1999 Work Plan, Hudson Falls Plant Site, Hudson Falls, New York" (2 vol.)
  February 23, 1999 HSI GeoTrans

- "1999 Hudson Falls Residential Well Sampling and Public Water Connection Program, General Electric Company, Albany, New York"
  September 1999 O'Brien and Gere Engineers

- "Proposed Remedial Action Plan for the General Electric Hudson Falls Plant, Operable Units 2A and 2B, Site No. 558013"
  November 1999 NYSDEC

- "Comments of General Electric Company on New York State Department of Environmental Conservation's Proposed Remedial Action Plan for the General Electric Hudson Falls Plant, Operable Units 2A and 2B"
  February 21, 2000 GE Corporate Environmental Programs

- "Bedrock Remedial Investigation Report, Addendum II, Operable Units 2C and 2D, GE Hudson Falls Plant Site, Hudson Falls, New York"
  March 2, 2001 GeoTrans

- "Recommendation For a Comprehensive Site-Wide Remedy and Feasibility Study For Bedrock Groundwater (OU-2C and OU-2D), Hudson Falls, NY - Plant Site" (4 vol.)
  March 2, 2001 GeoTrans

- 2001 Hudson Falls Residential Well Sampling and Public Water Connection Program, General Electric Company, Albany, New York"
  December 14, 2001 O'Brien and Gere Engineers
- "Addendum to Recommendation For a Comprehensive Site-Wide Remedy and Feasibility Study For Bedrock Groundwater (OU-2C and OU-2D), GE Hudson Falls Plant Site, Hudson Falls, New York"
  December 14, 2001 GeoTrans

- "2002 Hudson Falls Residential Well Sampling and Public Water Connection Program,

General Electric Company, Albany, New York"
October 9, 2002 O'Brien and Gere Engineers

- Proposed Remedial Action Plan, General Electric - Hudson Falls Plant Site, Operable Units 2A, 2B, 2C, 2D
  Village of Hudson Falls, Town of Kingsbury, Washington County, New York
  Site No. 5-58-013
  March 2003 NYSDEC

- "Comments of the General Electric Company on the New York state Department of Environmental Conservation's March, 2003 Hudson Falls Proposed Remedial Action Plan (PRAP)"
  June 2, 2003 General Electric Company

- [Weekly, Biweekly, Monthly and Quarterly Reports from the General Electric Company on the progress of the remedial program at the GE Hudson Falls Plant Site since 1993]

Appendix D

Tunnel and Drain Remedial Alternative Details

Appendix D: Preliminary Tunnel and Drain Design Details

(In order for the reader to more fully understand the tunnel/drain remedial alternatives, this text is repeated from Section 5.3.4.1 of "Recommendation for a Comprehensive Site-Wide Remedy and Feasibility Study for Bedrock Groundwater (OU-2C and OU-2D), Hudson Falls Plant Site, Hudson Falls, New York" prepared by GeoTrans, Inc. Drawings are also attached to this Appendix which show the tunnel layout and preliminary design details.)

Section 5.3.4.1 Tunnel/Drain Collection System

The tunnel/drain collection system would be built at the base of the Snake Hill Shale by excavating a central shaft near the south end of the eastern raceway. The central shaft location and layout of the tunnel for Alternative 4 are shown on Figure 5-7 (*See figures attached to this appendix*). The shaft would be excavated by drilling and blasting to an elevation of approximately 40 feet NGVD. Three tunnels, ten to twelve feet in diameter, would then be excavated from the shaft using a tunnel boring machine. Tunnel Segment 1 would be excavated approximately 300 feet to the northwest beneath the river, upstream of the plunge pool. Tunnel Segment 2 would be excavated approximately 600 feet southwesterly parallel to the riverbank downstream of the Bakers Falls. Tunnel Segment 3 would be excavated 650 feet in an arc curving beneath Bakers Falls downstream of the Bakers Falls Dam.

The vertical drain wells for Alternative 4 would be drilled from the tunnel upward towards the land surface and/or from the land surface down to the tunnel. At this time it is planned that the vertical drain wells would be spaced approximately 50 feet apart. The drain wells would intersect the upper and lower fault planes and create a hydraulic connection between the two fault planes, the more permeable middle Snake Hill Shale, and the tunnel. The vertical drain wells, in combination with the tunnel, will create steep hydraulic gradients within the Snake Hill Shale and would lower the water table elevation across the Site. The hydraulic gradients would slope from both the river and the plant Site toward the tunnel/drain well collection system. Groundwater flow model analyses conducted to evaluate the effectiveness of Alternative 4, using both a USEPA approach and a DFN approach, indicate that these steep hydraulic gradients would induce infiltration of surface water from the Hudson River into the bedrock and to the tunnel/drain collection system, and would cause all contaminated groundwater migrating from the Site towards the River to be captured. DNAPL in the bedrock fractures beneath the Bakers Falls and Hudson River would either be mobilized to flow into the tunnel/drain collection system, or become immobilized in the bedrock fractures. The hydraulic gradients created by tunnel/drain collection system would be of sufficient magnitude that they would prevent or minimize, the discharge of Site-related contamination, including PCBs, to the Hudson River. The effectiveness evaluations are presented in Section 4.2 and detailed discussion of the equivalent porous media and discrete fracture network model analyses are presented in Appendix B.

Sloping drain wells would be drilled, as necessary, from drill rooms excavated from tunnel segments 1 and 2, beneath the plunge pool and the river downstream of the plunge pool. These sloping drain wells would lower the hydraulic head in the bedrock beneath the river and create a larger region of downward hydraulic gradients from the river towards the tunnel/drain collection system. The hydraulic gradient established by the tunnel/drain collection system would be of sufficient magnitude that they will prevent DNAPL which may be present in

fractures adjacent to the river, from migrating to the river. The hydraulic gradient would cause contaminated groundwater that is present beneath the riverbed to flow toward the tunnel/drain collection system.

The drain wells would be connected to a common header in the tunnel that would lead to a pumping station located at the base of the central dropshaft. Groundwater and DNAPL would be separated in an oil-water separator prior to the water being pumped to the on-Site treatment plant. DNAPL would be pumped separately to a collection vessel located at the surface and near the dropshaft. Groundwater and DNAPL that enter the tunnel would be collected in a trench drain on the tunnel floor that would flow to the central shaft pumping station.

The tunnel/drain collection system concept has many advantages over other methods that can create a hydraulic barrier because of the reliability and simplicity of operation. The tunnel/drain collection system would create the hydraulic barrier by gravity drainage to the tunnel and a single lift station to pump the water to the treatment plant. To create a similar hydraulic barrier using pumping wells would require many wells each equipped with groundwater and DNAPL pumps. Operation and maintenance experience with the existing extractions system at the Site indicates that to keep pumping wells operating, a significant amount of regular maintenance is required. By eliminating the well pumps, the system would be more reliable and significant operation and maintenance cost savings would be realized. Other construction techniques such as: excavating a trench in the rock; creating a high permeability zone by blasting; and remote drill micro tunneling were initially evaluated and eliminated as impractical. Tunneling is a common construction operation. There are many contractors capable of constructing a tunnel such as the tunnel proposed here, and the rock is well suited to tunnel construction.

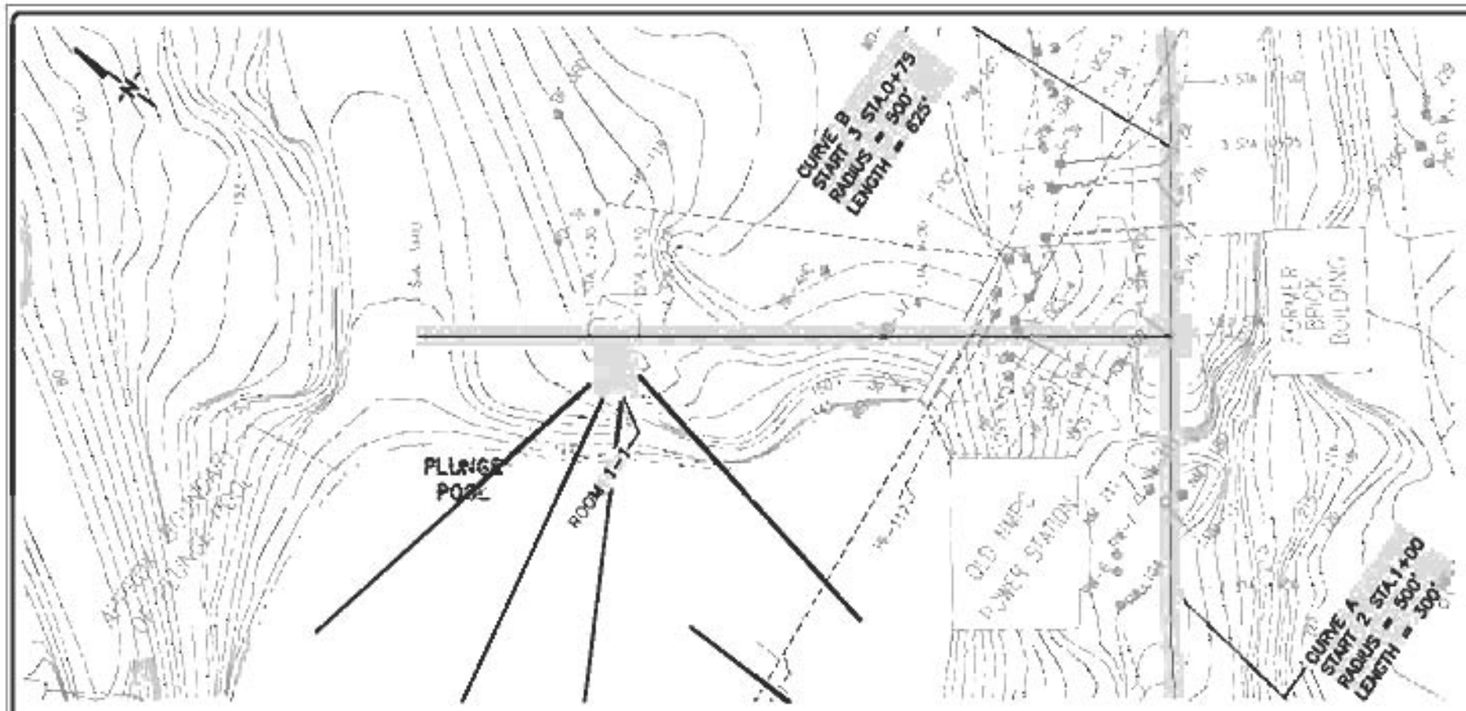

PLAN VIEW TUNNEL I

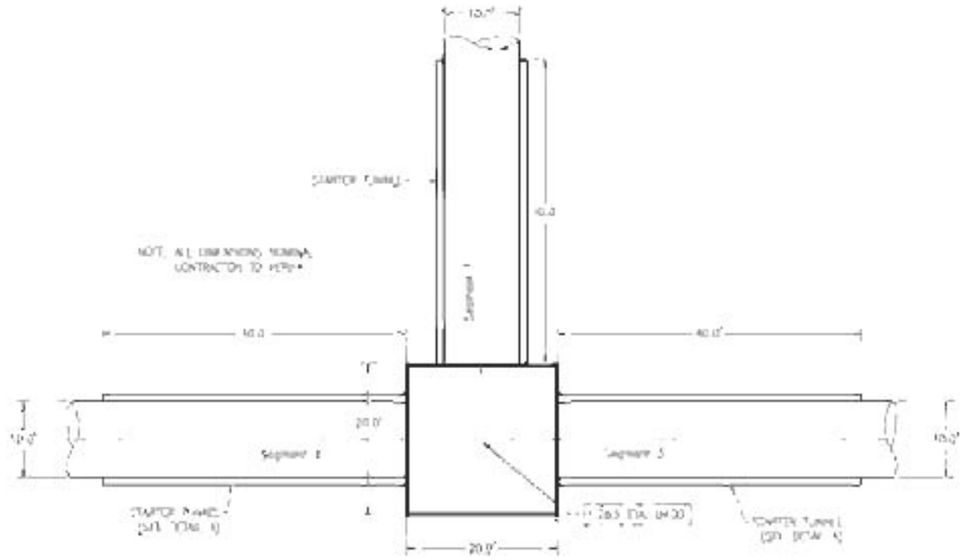

PLAN VIEW SHAFT

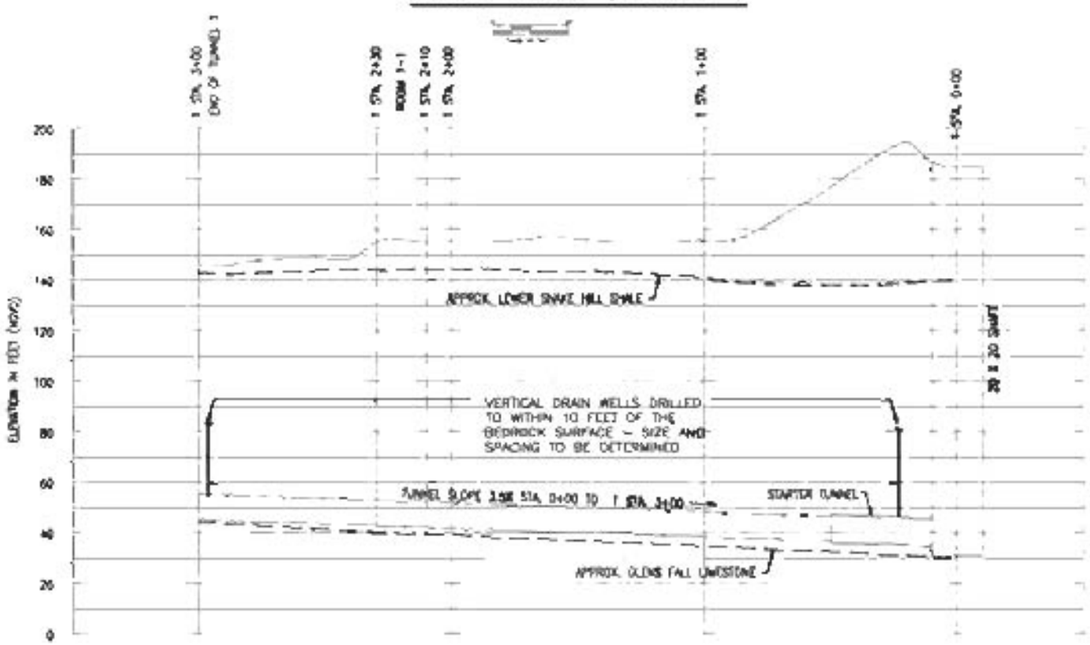

PROFILE TUNNEL I

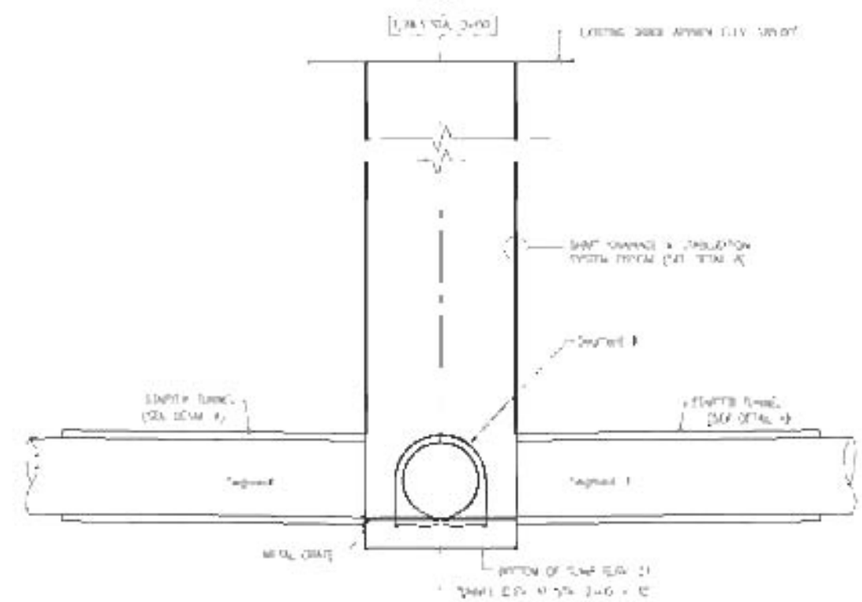

PROFILE SHAFT

PRELIMINARY DESIGN PLANS NOT FOR CONSTRUCTION

TITLE: Tunnel Segment 1 and Shaft Plan & Profile 1 STA 0+00 to 3 STA 3+00

LOCATION: GE Hudson Falls

BRIERLEY ASSOCIATES LIMITED LIABILITY COMPANY

CHECKED	GB	FIGURE
DRAWN	JAW	2
FILE	FIGURE-1_DWG	
DATE	3/26/01	

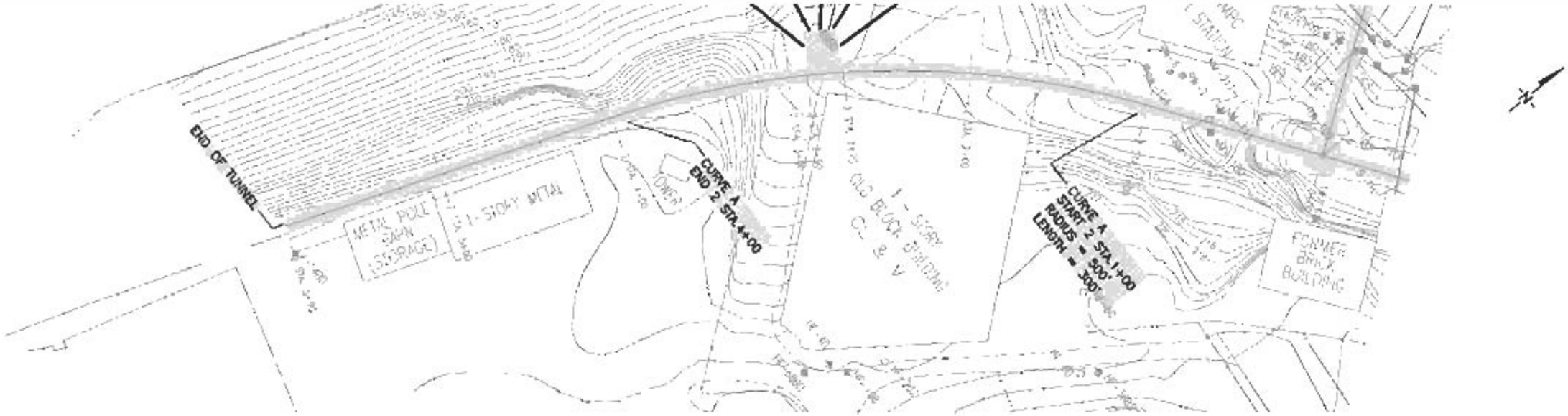

PLAN VIEW TUNNEL 2

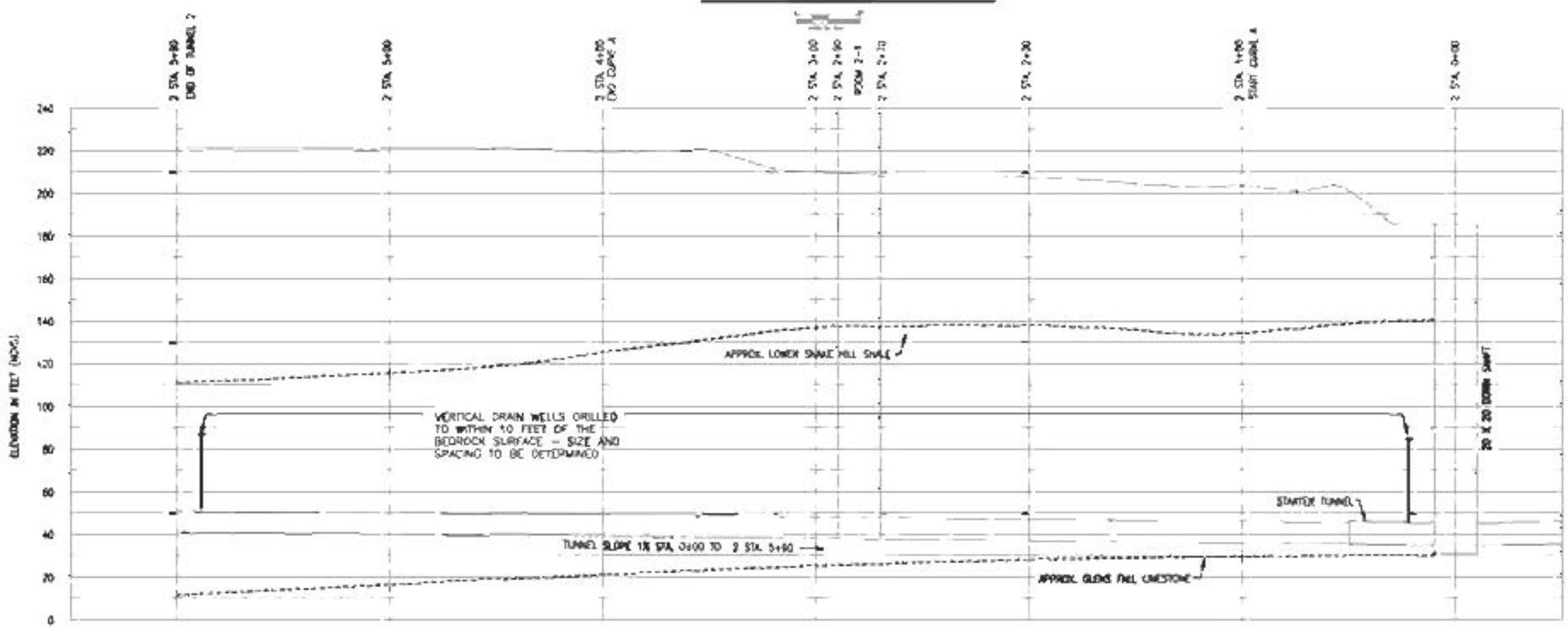

PROFILE TUNNEL 2

PRELIMINARY DESIGN PLANS NOT FOR CONSTRUCTION

Tunnel Segment 2 Plan & Profile STA 0+00 to 2 STA 6+00

GE Hudson Falls

BRIERLEY ASSOCIATES LIMITED LIABILITY COMPANY

CHECKED	GB
DRAWN	AW
FILE	PROFILE-2.DWG
DATE	3/28/01

FIGURE 3

PLAN VIEW TUNNEL 3

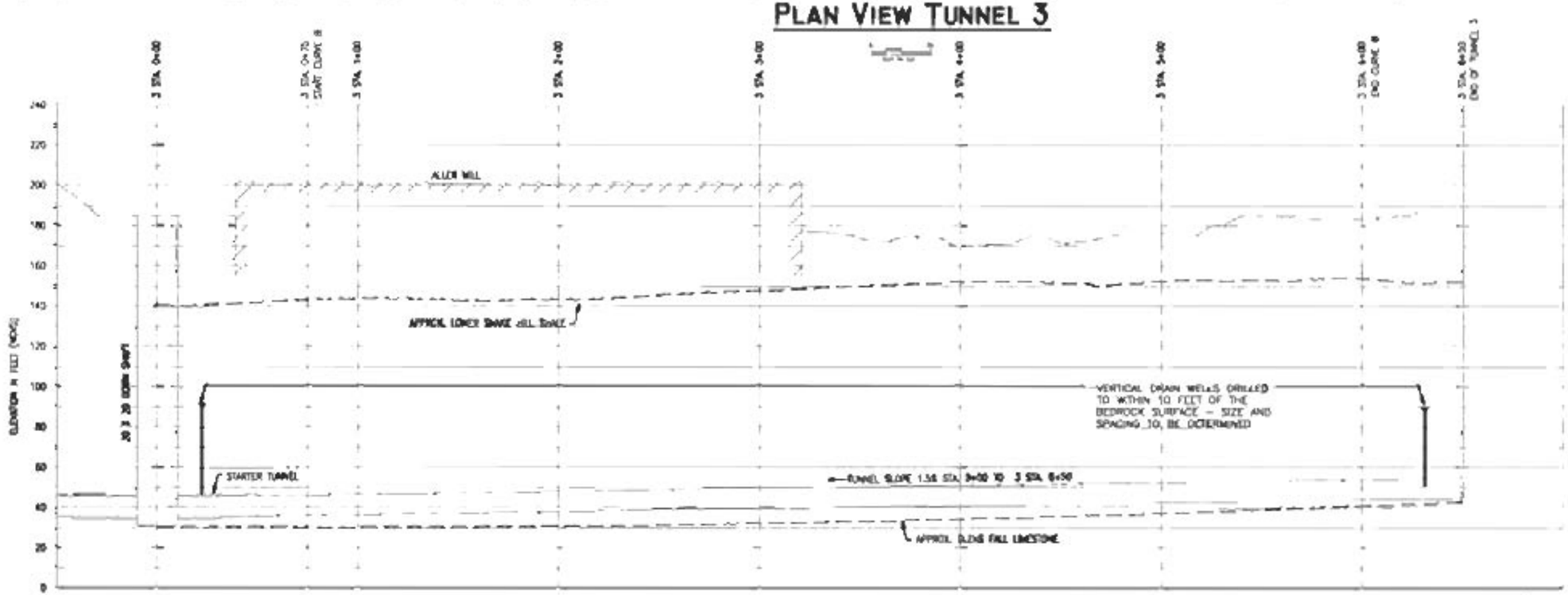

PROFILE TUNNEL 3

PRELIMINARY DESIGN PLANS NOT FOR CONSTRUCTION

Tunnel Segment 3 Plan & Profile STA 0+00 to 3 STA 6+50

GE Hudson Falls

BRIERLEY ASSOCIATES

LIMITED LIABILITY COMPANY

DESIGNED: JR

DRAWN: JRR

FILE: PROFILE-3.DWG

DATE: 3/28/01

FIGURE: 4

Typical Rock Bolt Detail

Typical Shaft Wall Detail B

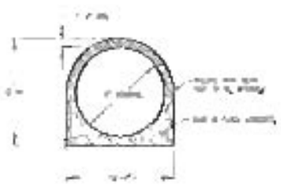

Typical Section A

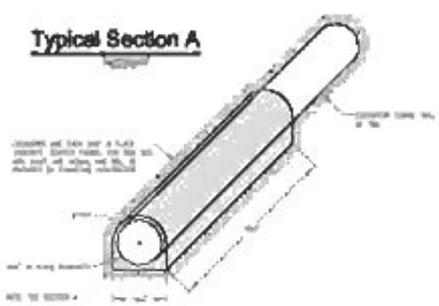

Typical Starter Tunnel Detail A

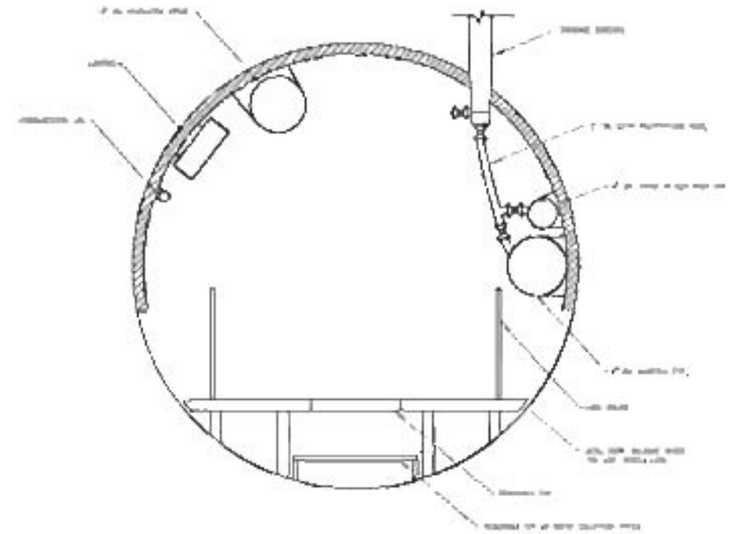

Tunnel Section

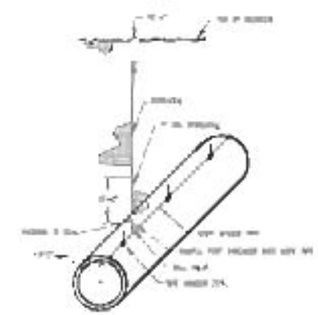

Tunnel Manifold Collector System

PRELIMINARY DESIGN PLANS NOT FOR CONSTRUCTION

Tunnel Details

GE Hudson Falls

BRIERLEY ASSOCIATES
LIMITED LIABILITY COMPANY

CHECKED	GB
DRAWN	JRW
FILE	DETAIL.DWG
DATE	8/28/01

FIGURE 5

Appendix E

Cost Estimates Modifications for Overburden Component of Remedial Alternatives, GE Hudson Falls Plant Site, #558013

Appendix E: Modifications to Cost Estimates for Overburden Component of Remedial Alternatives

The Department has reviewed the cost estimates for the overburden components of the remedial alternatives presented in this PRAP. As with the 1999 PRAP, the Department has modified these cost estimates to address concerns with the unit prices for the thermal desorption system and the off-site disposal of demolition debris, as well as with regulatory changes and cost multipliers. The attached cost tables were developed by the Department to estimate the costs of the overburden components of the remedial alternatives evaluated in this PRAP. The Department also modified the cost estimate for alternative S4 to account for the change in this alternative in response to public comments. The change in the soil volume to be treated under the selected remedy resulted an estimated present worth cost of $35 million.

Cost Estimate for Soil Cover Alternative S2

Elements	Quantity	Unit	Unit Cost	Cost
Mobilization/Demobilization				
Mobilization/Demobilization	1	LS	$100,000.00	$100,000
Install Fencing	9,900	LF	$20.00	$198,000
Sedimentation and Erosion Control	1	LS	$20,000.00	$20,000
Construction and Removal of Staging, Storage, and Decontamination Areas	1	LS	$30,000.00	$30,000
Land Use Restrictions	1	LS	$10,100.00	$10,100
			Subtotal	**$358,100**
Relocate Sumpter Street				
Survey and Stakeout	1	LS	$10,000.00	$10,000
Abandon Underground Utilities	1	LS	$50,000.00	$50,000
Relocate East Wall of Generator Room	1	LS	$10,000.00	$10,000
Fill Underground Tunnels	1,450	CY	$50.00	$72,500
Clearing and Grubbing	33,000	SF	$0.11	$3,630
Cold Milling of Asphalt Pavement	800	SY	$5.00	$4,000
Grading Subgrade	525	CY	$7.00	$3,675
Install Embankment	200	CY	$14.00	$2,800
Trench and Culvert Excavation	100	CY	$15.00	$1,500
Install Geotextile Fabric	20,000	SY	$3.00	$60,000
Install Subbase Material	1,575	CY	$23.50	$37,013
Install Asphalt Concrete-Type 1 Base Course	1,070	Ton	$45.00	$48,150
Install Asphalt Concrete-Type 3 Binder Course	530	Ton	$45.00	$23,850
Install Asphalt Concrete-Type 6F Top Course	425	Ton	$45.00	$19,125
Install Underdrain Filter Type 2	100	CY	$44.00	$4,400
Install Perf. Corr. Poly Underdrain Tubing 4" dia.	2,300	LF	$5.00	$11,500
Install Asphalt Concrete Driveways	45	Ton	$105.00	$4,725
Install White and Yellow Reflectorized Pavement Markings	5,200	LF	$0.50	$2,600
Traffic Control	1	LS	$50,000.00	$50,000
Handling and Staging of Spoil	500	CY	$10.00	$5,000
Transportation and Disposal of Soil	500	Ton	$55.00	$27,500
			Subtotal	**$451,968**
Decommission Buildings				
Demolish Mechanical Operations	1	LS	$336,000.00	$336,000
Equiptment Removal	80	Ton	$200.00	$16,000
Removal of Loose Lead-Based Paint	1	LS	$15,000.00	$15,000
Asbestos Abatement	1	LS	$350,000.00	$350,000
			Subtotal	**$717,000**
Building Demolition				
Demolish Buildings	186,000	SF	$4.00	$744,000
Dispose of Wood Material	400	Ton	$200.00	$80,000
Dispose of Steel Material	230	Ton	$55.00	$12,650
Dispose of TSCA-Regulated Building Debris	1,500	Ton	$200.00	$300,000
On-Site Consolidation of Demolition Debris	17,000	CY	$60.00	$1,020,000
			Subtotal	**$2,156,650**
Rock Spoil Consolidation				

Sampling and Analysis of Rock Debris	56	EA	$450.00	$25,200
On-Site Consolidation of Rock Debris	18,500	CY	$20.00	$370,000
			Subtotal	**$395,200**
Relocate/Modify Groundwater/DNAPL Recovery System				
Abandon wells/pit within Cap Footprint	1	LS	$40,000.00	$40,000
Install New Recovery Wells East of Buildings	5	EA	$20,000.00	$100,000
Install Electrical Enclosures	5	EA	$15,000.00	$75,000
Install New Groundwater Collection Piping	700	LF	$200.00	$140,000
Abandon Return Air Duct	1	LS	$32,000.00	$32,000
Remove OWS and Poly Tank from Bldg. 1	1	LS	$14,000.00	$14,000
Abandon Select Lift Stations and Sumps	1	LS	$19,000.00	$19,000
Reroute/Relocate/Install New Groundwater Support System	700	LF	$200.00	$140,000
Install Horizontal Corehole Connecting Tailrace Tunnel to Bedrock Remedy Shaft	1	LS	$30,000.00	$30,000
Reroute/Modify Allen Mill Groundwater Recovery System	1	LS	$170,000.00	$170,000
			Subtotal	**$760,000**
Construct Soil Cover				
Import and Place Fill/Topsoil	24,200	CY	$20.00	$484,000
Geosynthetic Drianage Composite	566,800	SF	$1.00	$566,800
Topsoil	12,100	CY	$30.00	$363,000
Seed and Mulch	15	Acre	$2,500.00	$36,750
			Subtotal	**$1,450,550**
Construction of Concrete Pad				
Prepare Subbase	260	CY	$25.00	$6,500
Concrete Pad	390	CY	$90.00	$35,100
			Subtotal	**$41,600**
Sitewide Electrical Distribution				
Sitewide Electrical Distribution	1	LS	$300,000.00	$300,000
			Subtotal	**$300,000**
	Subtotal Capital Cost			**$6,631,068**
Project Management and Engineering Design (10%)				**$663,107**
Construction Oversight (10%)				**$663,107**
Miscellaneous and Contingency (25%)				**$1,657,767**
	Total Capital Cost			**$9,615,048**
Operation and Maintenance Cost Estimate				
Soil Cover/Cap/Pad Inspection				
Mowing	15.5	Acre	$800.00	$12,400
Cap Inspection	2	EA	$1,200.00	$2,400
Maintenance to Low-Permeability Cap	2.5	Acre	$1,500.00	$3,750
			Subtotal	**$18,550**
Groundwater Monitoring				

Groundwater Monitoring	12	Well	$5,600.00	$67,200
			Subtotal	**$67,200**
Surface Water Management				
Inspection of Basin, Pumping System, Berms, and Channel	48	MH	$50.00	$2,400
Maintenance to Basin, Berms and Channel	1	LS	$2,500.00	$2,500
Lift Station Maintenance and Repairs	1	LS	$2,500.00	$2,500
Wastewater Treatment	15	GPM	$7,000.00	$105,000
Sludge Transport and Incineration	2.4	CY	$1,800.00	$4,320
			Subtotal	**$116,720**
New Monitoring Program				
Annual Monitoring	1	LS	$10,000.00	$10,000
			Subtotal	**$10,000**
		Subtotal O&M Cost		**$212,470**
Project Management, Miscellaneous, and Contingency (15%)				**$31,871**
		Annual O&M total		**$244,341**
		Total Present Worth of O&M (7%)		**$3,032,021**
		Total Present Worth Cost of Overburden Component		**$12,647,069**

Cost Estimate for RCRA Cap and Soil Cover, Alternative S3

Elements	Quantity	Unit	Unit Cost	Cost
Mobilization/Demobilization				
Mobilization/Demobilization	1	LS	$100,000.00	$100,000
Install Fencing	9,900	LF	$20.00	$198,000
Sedimentation and Erosion Control	1	LS	$20,000.00	$20,000
Construction and Removal of Staging, Storage, and Decontamination Areas	1	LS	$30,000.00	$30,000
Land Use Restrictions	1	LS	$10,100.00	$10,100
			Subtotal	**$358,100**
Relocate Sumpter Street				
Survey and Stakeout	1	LS	$10,000.00	$10,000
Abandon Underground Utilities	1	LS	$50,000.00	$50,000
Relocate East Wall of Generator Room	1	LS	$10,000.00	$10,000
Fill Underground Tunnels	1,450	CY	$50.00	$72,500
Clearing and Grubbing	33,000	SF	$0.11	$3,630
Cold Milling of Asphalt Pavement	800	SY	$5.00	$4,000
Grading Subgrade	525	CY	$7.00	$3,675
Install Embankment	200	CY	$14.00	$2,800
Trench and Culvert Excavation	100	CY	$15.00	$1,500
Install Geotextile Fabric	20,000	SY	$3.00	$60,000
Install Subbase Material	1,575	CY	$23.50	$37,013
Install Asphalt Concrete-Type 1 Base Course	1,070	Ton	$45.00	$48,150
Install Asphalt Concrete-Type 3 Binder Course	530	Ton	$45.00	$23,850
Install Asphalt Concrete-Type 6F Top Course	425	Ton	$45.00	$19,125
Install Underdrain Filter Type 2	100	CY	$44.00	$4,400
Install Perf. Corr. Poly Underdrain Tubing 4" dia.	2,300	LF	$5.00	$11,500
Install Asphalt Concrete Driveways	45	Ton	$105.00	$4,725
Install White and Yellow Reflectorized Pavement Markings	5,200	LF	$0.50	$2,600
Traffic Control	1	LS	$50,000.00	$50,000
Handling and Staging of Spoil	500	CY	$10.00	$5,000
Transportation and Disposal of Soil	500	Ton	$55.00	$27,500
			Subtotal	**$451,968**
Decommission Buildings				
Demolish Mechanical Operations	1	LS	$336,000.00	$336,000
Equiptment Removal	80	Ton	$200.00	$16,000
Removal of Loose Lead-Based Paint	1	LS	$15,000.00	$15,000
Asbestos Abatement	1	LS	$350,000.00	$350,000
			Subtotal	**$717,000**
Building Demolition				
Demolish Buildings	186,000	SF	$4.00	$744,000
Dispose of Wood Material	400	Ton	$200.00	$80,000
Dispose of Steel Material	230	Ton	$55.00	$12,650
Dispose of TSCA-Regulated Building Debris	1,500	Ton	$200.00	$300,000
On-Site Consolidation of Demolition Debris	17,000	CY	$60.00	$1,020,000
			Subtotal	**$2,156,650**
Rock Spoil Consolidation				

Sampling and Analysis of Rock Debris	56	EA	$450.00	$25,200
On-Site Consolidation of Rock Debris	18,500	CY	$20.00	$370,000
			Subtotal	**$395,200**
Relocate/Modify Groundwater/DNAPL Recovery System				
Abandon wells/pit within Cap Footprint	1	LS	$40,000.00	$40,000
Install New Recovery Wells East of Buildings	5	EA	$20,000.00	$100,000
Install Electrical Enclosures	5	EA	$15,000.00	$75,000
Install New Groundwater Collection Piping	700	LF	$200.00	$140,000
Abandon Return Air Duct	1	LS	$32,000.00	$32,000
Remove OWS and Poly Tank from Bldg. 1	1	LS	$14,000.00	$14,000
Abandon Select Lift Stations and Sumps	1	LS	$19,000.00	$19,000
Reroute/Relocate/Install New Groundwater Support System	700	LF	$200.00	$140,000
Install Horizontal Corehole Connecting Tailrace Tunnel to Bedrock Remedy Shaft	1	LS	$30,000.00	$30,000
Reroute/Modify Allen Mill Groundwater Recovery System	1	LS	$170,000.00	$170,000
			Subtotal	**$760,000**
Construct RCRA Cap				
RCRA Cap				
Clay, 1E-07 cm/s	6,365	CY	$7.50	$47,700
Geomembrane, 40 mil HDPE	85,930	SF	$1.07	$91,900
Coarse Drainage Layer, Sand 1.5 ton/cy	3,185	CY	$7.50	$23,900
Geofabric Filter	85,930	SF	$0.65	$55,900
Soil Cover	7,960	CY	$5.25	$41,800
Topsoil	1,590	CY	$9.50	$15,100
Spread, Grade, Compact	60	Day	$3,880.00	$232,800
Seed and Mulch	9,550	SY	$0.35	$3,400
			Subtotal	**$512,500**
Construct Soil Cover				
Import and Place Fill/Topsoil	21,000	CY	$25.00	$525,000
Geosynthetic Drianage Composite	480,870	SF	$1.00	$480,870
Topsoil	10,500	CY	$30.00	$315,000
Seed and Mulch	13	Acre	$2,500.00	$32,500
			Subtotal	**$1,353,370**
Construction of Concrete Pad				
Prepare Subbase	260	CY	$25.00	$6,500
Concrete Pad	390	CY	$90.00	$35,100
			Subtotal	**$41,600**
Sitewide Electrical Distribution				
Sitewide Electrical Distribution	1	LS	$300,000.00	$300,000
			Subtotal	**$300,000**
South End of Eastern Raceway Activities				
Pre-Design Investigation Activities	1	LS	$50,000.00	$50,000
Mobilization/Demobilization	1	LS	$10,000.00	$10,000
Well Abandonment	1	LS	$30,000.00	$30,000
Sheeting/Shoring	11,400	SF	$30.00	$342,000

Protection of Existing Utilities/Recovery Well	1	LS	$30,000.00	$30,000
Soil Excavation	2,600	CY	$30.00	$78,000
Material Handling/Dewatering	720	CY	$15.00	$10,800
Power Wash Eastern Raceway	1	LS	$20,000.00	$20,000
Install Concrete Mat	70	CY	$90.00	$6,300
Seal Penstock Openings	50	CY	$350.00	$17,500
Import, Place, and Compact Backfill	2,600	CY	$20.00	$52,000
Reinstall Recovery Wells	2	EA	$20,000.00	$40,000
Transportation and Off-Site Disposal of TSCA Regulated Waste	1,260	Ton	$200.00	$252,000
On-Site Consolidation of Non-hazardous Waste	1,880	Ton	$20.00	$37,600
			Subtotal	**$976,200**
Install Overburden Monitoring Wells Beneath the Cap				
Modify/Restore Select Areas of the Cap	1	LS	$10,000.00	$10,000
Install Monitoring Wells	1	LS	$40,000.00	$40,000
Surveying	1	LS	$3,000.00	$3,000
Charachterization and Disposal of Well Cuttings	1	LS	$4,000.00	$4,000
			Subtotal	**$57,000**
	Subtotal Capital Cost			**$8,022,588**
Project Management and Engineering Design (10%)				**$802,259**
Construction Oversight (10%)				**$802,259**
Miscellaneous and Contingency (25%)				**$2,005,647**
	Total Capital Cost			**$11,632,752**
Operation and Maintenance Cost Estimate				
Soil Cover/Cap/Pad Inspection				
Mowing	15.5	Acre	$800.00	$12,400
Cap Inspection	2	EA	$1,200.00	$2,400
Maintenance to RCRA Cap	2.5	Acre	$1,500.00	$3,750
			Subtotal	**$18,550**
Groundwater Monitoring				
Groundwater Monitoring	12	Well	$5,600.00	$67,200
			Subtotal	**$67,200**
Surface Water Management				
Inspection of Basin, Pumping System, Berms, and Channel	48	MH	$50.00	$2,400
Maintenance to Basin, Berms and Channel	1	LS	$2,500.00	$2,500
Lift Station Maintenance and Repairs	1	LS	$2,500.00	$2,500
Wastewater Treatment	15	GPM	$7,000.00	$105,000
Sludge Transport and Incineration	2.4	CY	$1,800.00	$4,320
			Subtotal	**$116,720**
New Monitoring Program				
Annual Monitoring	1	LS	$10,000.00	$10,000
			Subtotal	**$10,000**

Subtotal O&M Cost	**$212,470**
Project Management, Miscellaneous, and Contingency (15%)	**$31,871**
Annual O&M total	**$244,341**
Total Present Worth of O&M (7%)	**$3,032,027**
Total Present Worth Cost of Overburden Component	**$14,664,779**

Cost Estimate for Excavation and On-Site Treatment by Thermal Desorbtion, Alternative S4 (modified)

Elements	Quantity	Unit	Unit Cost	Cost
Mobilization/Demobilization				
Mobilization/Demobilization	1	LS	$100,000.00	$100,000
Install Fencing	9,900	LF	$20.00	$198,000
Sedimentation and Erosion Control	1	LS	$20,000.00	$20,000
Construction and Removal of Staging, Storage, and Decontamination Areas	1	LS	$30,000.00	$30,000
Land Use Restrictions	1	LS	$10,100.00	$10,100
			Subtotal	**$358,100**
Relocate Railroad				
Prepare Surface and Subgrade	1	LS	$5,000.00	$5,000
Removal of Track and Ties	1	LS	$25,000.00	$25,000
Transportation and Off-Site Disposal of Track, Ties, and Ballast	3,200	TON	$55.00	$176,000
Track Construction between John and Bridge Streets	1	LS	$170,000.00	$170,000
Install New Switch	1	LS	$30,000.00	$30,000
Install New Crossings at Bridge and John Streets	2	EA	$50,000.00	$100,000
			Subtotal	**$506,000**
Relocate Sumpter Street				
Survey and Stakeout	1	LS	$10,000.00	$10,000
Abandon Underground Utilities	1	LS	$50,000.00	$50,000
Relocate East Wall of Generator Room	1	LS	$10,000.00	$10,000
Fill Underground Tunnels	1,450	CY	$50.00	$72,500
Clearing and Grubbing	33,000	SF	$0.11	$3,630
Cold Milling of Asphalt Pavement	800	SY	$5.00	$4,000
Grading Subgrade	525	CY	$7.00	$3,675
Install Embankment	200	CY	$14.00	$2,800
Trench and Culvert Excavation	100	CY	$15.00	$1,500
Install Geotextile Fabric	20,000	SY	$3.00	$60,000
Install Subbase Material	1,575	CY	$23.50	$37,013
Install Asphalt Concrete-Type 1 Base Course	1,070	Ton	$45.00	$48,150
Install Asphalt Concrete-Type 3 Binder Course	530	Ton	$45.00	$23,850
Install Asphalt Concrete-Type 6F Top Course	425	Ton	$45.00	$19,125
Install Underdrain Filter Type 2	100	CY	$44.00	$4,400
Install Perf. Corr. Poly Underdrain Tubing 4" dia.	2,300	LF	$5.00	$11,500
Install Asphalt Concrete Driveways	45	Ton	$105.00	$4,725
Install White and Yellow Reflectorized Pavement Markings	5,200	LF	$0.50	$2,600
Traffic Control	1	LS	$50,000.00	$50,000
Handling and Staging of Spoil	500	CY	$10.00	$5,000
Transportation and Disposal of Soil	500	Ton	$55.00	$27,500
			Subtotal	**$451,968**
Decommission Buildings				
Demolish Mechanical Operations	1	LS	$336,000.00	$336,000

Equiptment Removal	80	Ton	$200.00	$16,000
Removal of Loose Lead-Based Paint	1	LS	$15,000.00	$15,000
Asbestos Abatement	1	LS	$350,000.00	$350,000
			Subtotal	**$717,000**
Building Demolition				
Demolish Buildings	186,000	SF	$4.00	$744,000
Demolish Concrete Floor Slabs and Foundations	2,900	CY	$100.00	$290,000
Building Characterization Sampling	1	LS	$100,000.00	$100,000
Transportation and Disposal of Non-Haz. Debris	17,500	Ton	$55.00	$962,500
Transportation and Disposal of TSCA Debris	7,500	Ton	$200.00	$1,500,000
			Subtotal	**$3,596,500**
Rock Spoil Consolidation				
Sampling and Analysis of Rock Debris	56	EA	$450.00	$25,200
On-Site Consolidation of Rock Debris	18,500	CY	$20.00	$370,000
			Subtotal	**$395,200**
Relocate/Modify Groundwater/DNAPL Recovery System				
Abandon wells/pit within Cap Footprint	1	LS	$40,000.00	$40,000
Install New Recovery Wells East of Buildings	5	EA	$20,000.00	$100,000
Install Electrical Enclosures	5	EA	$15,000.00	$75,000
Install New Groundwater Collection Piping	700	LF	$200.00	$140,000
Abandon Return Air Duct	1	LS	$32,000.00	$32,000
Remove OWS and Poly Tank from Bldg. 1	1	LS	$14,000.00	$14,000
Abandon Select Lift Stations and Sumps	1	LS	$19,000.00	$19,000
Reroute/Relocate/Install New Groundwater Support System	700	LF	$200.00	$140,000
Install Horizontal Corehole Connecting Tailrace Tunnel to Bedrock Remedy Shaft	1	LS	$30,000.00	$30,000
Reroute/Modify Allen Mill Groundwater Recovery System	1	LS	$170,000.00	$170,000
			Subtotal	**$760,000**
Soil Excavation				
Pre-Engineered Enclosure Install/Removal	1	LS	$3,500,000.00	$3,500,000
Sheeting/Shoring	18,000	SF	$15.00	$270,000
Impacted Soil Excavation	23,900	CY	$20.00	$478,000
Excavation Dewatering	1	LS	$20,000.00	$20,000
Vapor Supression	1	LS	$120,000.00	$120,000
Material Handling/Dewatering	23,900	CY	$15.00	$358,500
Verification Sampling	100	EA	$800.00	$80,000
			Subtotal	**$4,826,500**
Mobile Thermal Desorption System				
Bench Scale Test	1	LS	$150,000.00	$150,000
Pilot Scale Test	1	LS	$1,000,000.00	$1,000,000
Thermal Treatment of Material	41,580	TON	$150.00	$6,237,000
Permitting	1	LS	$77,500.00	$77,500
Post-Treatment Verification Sampling	570	EA	$800.00	$456,000
			Subtotal	**$7,920,500**
Construct Soil Cover				
Import and Place Fill/Topsoil	24,200	CY	$20.00	$484,000

Geosynthetic Drianage Composite	566,800	SF	$1.00	$566,800
Topsoil	12,100	CY	$30.00	$363,000
Seed and Mulch	15	Acre	$2,500.00	$36,750
			Subtotal	**$1,450,550**
Backfill Excavations				
Flowable Fill	2,200	CY	$50.00	$110,000
Place and Compact Treated Soil	23,900	CY	$10.00	$239,000
Import, Place and Compact Soil Backfill	20,350	CY	$20.00	$407,000
				$756,000
Construction of Concrete Pad				
Prepare Subbase	260	CY	$25.00	$6,500
Concrete Pad	390	CY	$90.00	$35,100
			Subtotal	**$41,600**
Sitewide Electrical Distribution				
Sitewide Electrical Distribution	1	LS	$300,000.00	$300,000
			Subtotal	**$300,000**
	Subtotal Capital Cost			**$22,079,918**
Project Management and Engineering Design (10%)				**$2,207,992**
Construction Oversight (10%)				**$2,207,992**
Miscellaneous and Contingency (25%)				**$5,519,979**
	Total Capital Cost			**$32,015,880**
Operation and Maintenance Cost Estimate				
Soil Cover/Cap/Pad Inspection				
Mowing	14.7	Acre	$800.00	$11,760
Cover Review	2.0	Visit	$1,200.00	$2,400
			Subtotal	**$14,160**
Groundwater Monitoring				
Groundwater Monitoring	12	Well	$5,600.00	$67,200
			Subtotal	**$67,200**
Surface Water Management				
Inspection of Basin, Pumping System, Berms, and Channel	48	MH	$50.00	$2,400
Maintenance to Basin, Berms and Channel	1	LS	$2,500.00	$2,500
Lift Station Maintenance and Repairs	1	LS	$2,500.00	$2,500
Wastewater Treatment	15	GPM	$7,000.00	$105,000
Sludge Transport and Incineration	2.4	CY	$1,800.00	$4,320
			Subtotal	**$116,720**
New Monitoring Program				
Annual Monitoring	1	LS	$10,000.00	$10,000
			Subtotal	**$10,000**
	Subtotal O&M Cost			**$208,080**

Project Management, Miscellaneous, and Contingency (15%)	**$31,212**
Annual O&M total	**$239,292**
Total Present Worth of O&M (7%)	**$2,969,374**
Total Present Worth Cost of Overburden Component (Excavation and Thermal Desorption)	**$34,985,255**

Appendix F

Responsiveness Summary

RESPONSIVENESS SUMMARY

GE Hudson Falls Plant Site
Operable Units 2A-2D
Village of Hudson Falls, Town of Kingsbury, Washington County, **New York**
Site No. 5-58-013

The Proposed Remedial Action Plan (PRAP) for Operable Units 2A-2D of the GE Hudson Falls Plant Site, was prepared by the New York State Department of Environmental Conservation (NYSDEC) in consultation with the New York State Department of Health (NYSDOH) and was issued to the document repositories on March 27, 2003. The PRAP outlined the remedial measure proposed for the contaminated soils and groundwater at the GE Hudson Falls Plant Site.

The release of the PRAP was announced by sending a notice to the public contact list, informing the public of the opportunity to comment on the proposed remedy. Project documents were made available at the following document repositories:

- Washington County Clerk's Office, 383 Upper Broadway, Fort Edward, NY 12828
- Adriance Public Library, 93 Market Street, Poughkeepsie, NY 12601
- DEC Region 5 Office, Route 86, Ray Brook, NY 12977
- DEC Central Office, 625 Broadway, Albany, NY 1223

An availability session and a public meeting were held on April 30, 2003, each of which included a presentation of the Remedial Investigation (RI) and the Feasibility Study (FS) as well as a discussion of the proposed remedy. (The transcript of the public meeting is attached.) These meetings provided opportunity for citizens to discuss their concerns, ask questions and comment on the proposed remedy. These comments have become part of the Administrative Record for this site. The public comment period was to have ended on May 27, 2003; however it was extended to June 2, 2003, at the request of the public.

This responsiveness summary responds to questions and comments raised during the public comment period. The following are the comments received, with the NYSDEC's responses:

Written comments on the March 2003 Proposed Remedial Action Plan ("PRAP") were received from General Electric (GE), Scenic Hudson, Friends of a Clean Hudson, and Hudson CARE. A comment was also received by phone from the Mayor of Hudson Falls.

GE's comments, and the Department's responses, have been grouped into several catagories, below.

A. GE comments relating to the range of alternatives evaluated and the relationship between elements of the alternatives

Comment 1: GE asserted that the Department fails to consider the full range of options for soils, and that the PRAP failed to consider or mention a proposal by GE (which GE refers to as the "GE 2002 remedy proposal" received by the Department after the Feasibility Study for the site was completed.

Response 1: The Department did consider and evaluate the 2002 GE proposal, even though it was not part of the Feasibility Study. The 2002 proposal included remediation of only a portion of the soils which were identified by GE as potential sources of mobile non-aqueous phase liquid (NAPL) in it's comments on the 1999 PRAP for this site. There was no explanation given in the proposal for the decision to remediate certain areas and not others, other than to state that they were targeted for removal and/or treatment because they contain the highest mass of PCB and VOC concentrations. The proposal would not abate the significant threat to human health and/or the environment posed by disposal of hazardous wastes which impacted the soils at the site. Further, the Department concluded that the GE 2002 remedy proposal would only represent a modest improvement over the complete capping alternative. Further, The Department therefore did not include the 2002 GE remedy proposal in the PRAP.

Comment 2: GE asserted that the evaluation of the remedy options against the regulatory selection criteria do not take into account the effect of the bedrock remedies on the potential migration and exposure pathways for the PCB-containing soils. GE asserted that the PRAP evaluates the soils and groundwater components as if they are completely unrelated remedies, and that embedded in the concept of a comprehensive sitewide remedy is an acknowledgement that the groundwater component of the remedy affects any of the potential pathways for migration of PCBs from soils to the groundwater. GE also stated that this lack of consideration of the interaction between the remedy components appears arbitrary.

Response 2: GE through its comments attempts to articulate the consequences of its hazardous waste management activities as essentially affecting only the Hudson River. In so doing, it seems to disregard the clear evidence of record demonstrating that its management detrimentally affected more than the Hudson and the natural resources dependent upon it: among other consequences, its hazardous waste management deprived the public of the use of the impacted portion of the overburden aquifer as a drinking water supply.

The Department's obligation to address all significant threats resulting from GE's

hazardous waste management requires it to develop a remedial response that addresses amelioration of the impacted portion of the overburden aquifer's contaminated state. The Department has concluded based upon its remedy selection criteria in 375-1.10 that the relative simplicity in removing the source at this site, as opposed to conditions at other sites (where no complex engineering problems need to be overcome) supports development and implementation of a permanent remedy, not one that primarily relies upon engineering controls, as the GE 2002 proposal recommends.

On the issue of institutional controls, it should be understood that remediation seeks to reduce, if not eliminate, uncontrolled hazardous waste presence in the environment in order to mitigate, if not eliminate, adverse consequences associated with that uncontrolled presence. Inherent in the concept of "remediation," then, is affirmative action to remove contamination from the environment. Thus, the Department views institutional controls first as supplements to a remedy that are intended to manage the risk attendant with the residual contamination and not as substitutes for active response measures unless those active response measures are determined through the remedy selection process not to be practicable; and the question of impracticability has not been established in this matter to any degree that would enable the Department to conclude that active response measures are impracticable to implement in order to mitigate, if not eliminate, adverse consequences associated with uncontrolled hazardous waste presence.

Additionally, the Department did consider the interaction between the various remedy components in this remedy selection process. The Department did not in any way state in the PRAP, or otherwise consider, that the groundwater component of the remedy affects the potential pathways for migration of PCBs from the soils to the groundwater. The PRAP did state that the groundwater remedy would "...prevent further releases of PCBs from beneath the site to the Hudson River", but did not state that the potential pathways from the soils to the groundwater would be affected. The PRAP, in addressing the issue of migration of PCBs from the soils to the groundwater, instead stated (on p. 29) "Alternatives S1, S2 and S3 would result in continued releases of PCB and other contaminants from the contaminated soils to the groundwater of the state and the environment, contributing to the exceedance of the water quality standards. Alternative S4 would eliminate these soils as a source of continuing groundwater contamination above standards."

The Department did take into account the effect of the bedrock remedies on the potential migration and exposure pathways for the PCB contaminated soils.

Comment 3: GE asserted that the PRAP also fails to clearly acknowledge the fact that the major environmental concern at the Site is the PCBs within the fractured bedrock

that directly underlay the soils. GE stated that:

- if any of the PCB were to migrate from the soil, it would enter this bedrock and add only trivial amounts of PCB; and
- the tunnel drain collection system would effectively isolate this material from the environment and would be just as effective as the Department's proposed remedy in mitigating any threat posed by the impacted soils.

GE also asserted that "the PRAP fails to consider how the operation of the proposed tunnel drain collection system obviates the need for treatment/removal of large volumes of soils at the Site. The tunnel drain collection system serves two purposes, only one of which the PRAP recognizes. As the PRAP acknowledges, the tunnel drain collection system would effectively reduce the flow of contaminants from the bedrock to the Hudson River (PRAP, page 34). But, in addition, this system, when combined with the enhanced groundwater extraction system that GE is proposing, would also dewater the remaining overburden soils (with one minor exception discussed later) and collect any NAPL that might possibly become mobile during the dewatering process."

GE also asserted that the tunnel drain collection system would effectively isolate this material from the environment and would be just as effective as the Department's proposed remedy in mitigating any threat posed by the impacted soils.

GE also asserted that the GE 2002 Proposed Remedy cost-effectively eliminates, with the minor exception noted, the presence of contaminated groundwater in the soils.

Response 3: The PRAP does articulate the impacts of the PCB contamination within the fractured bedrock in the vicinity of the site. The relative magnitude of threat posed by the wastes disposed at the site which impacted the soils at the site, and the threat posed by the wastes disposed at the site which impacted the underlying bedrock, is not a determining factor whether the wastes disposed at the site which impacted the soils constitute a significant threat to human health and/or the environment. As clearly stated in the PRAP on p. 8, one basis for the significant threat determination was:

"...significant environmental damage associated with the impacts of contaminants (PCBs and VOCs) on the overburden and bedrock aquifers beneath the site, which had been usable in the past for human water consumption, but which are now unusable without treatment due to the presence and resulting impacts of PCBs and VOCs above applicable standards;"

The significant environmental damage related to the impacts of waste disposal at

the site on the overburden aquifer, as well as on the bedrock aquifer, gives rise to significant threat.

In any event, the Department's remedy and the 2002 GE proposal are not equivalent since, contrary to GE's assertion, they do not yield the same result. The implementation of the 2002 GE proposal would address this significant environmental damage upon the overburden aquifer by rendering the impacted portion of the aquifer forever unusable; dewatering of the aquifer and allowing the aquifer matrix to continue to contain very high levels of PCBs and VOCs renders the impacted portion of the aquifer as unusable as if no remedial program were undertaken. Rather than proposing a remedy that attempts to restore a damaged resource and that attempts to permanently reduce the harmful impacts on that resource, the 2002 GE proposal would negate the resource (keeping the overburden soils dry) and leaves in place the contamination source that will deprive the public of the use of the impacted portion of the overburden aquifer not only during the dewatering, but after any future advances in remedial technology which make the dewatering unnecessary.

The Department, in implementing the State's remedial program, takes into account the remedy selection criteria in 6 NYCRR Part 375. Among these criteria is the preference for remedies that permanently and significantly reduces the volume, toxicity, and/or mobility of the hazardous wastes and/or constituents at the site through treatment. A hierarchy of remedial technologies is also established in the regulation, which ranks from most preferable to least preferable: (i) Destruction, onsite or offsite; (ii) Separation/treatment, onsite or offsite; (iii) Solidification/chemical fixation, onsite or offsite; and (iv) Control and isolation offsite or onsite. At this site, a remedial alternative is available which maximizes the use of treatment to accomplish the reduction of toxicity, mobility and/or mobility of the contaminants within the overburden soils. This remedial alternative, which is identified in this ROD as the selected remedial alternative, has been selected taking into account the remedy selection criteria in 6 NYCRR Part 375.

Comment 4: GE asserted that, with respect to releases to the river, the PRAP recognizes that the tunnel drain system will reduce the flux of PCBs to the River and effectively address all three groundwater operable units, including the shallow groundwater within the PCB containing soils

Response 4: The PRAP text does not make the statement as described by GE in this comment. Instead, the text states (on p. 33) "Alternative G4 is expected to prevent further releases of PCBs from beneath the site to the Hudson River. These releases currently contribute to the exceedance of water quality standards in the Hudson River." This statement should not be interpreted as meaning that the tunnel and

drain system would effectively address the shallow groundwater. The PRAP text clearly states, on p. 29, that the capping alternative would "...result in continued releases of PCB and other contaminants from the contaminated soils to the groundwater of the state and the environment, contributing to the exceedance of the water quality standards."

Comment 5: GE asserted that "Treating or removing the large volume of soils called for by the PRAP will have no additional benefits as far as eliminating the presence of contaminated groundwater in the soils or the release of PCBs to the river" and described in its commentary a "knee of the curve analysis" to illustrate this assertion. GE also asserted that "The analysis can be used to evaluate and weigh the benefits associated with various criteria. In this case, the percentage of PCBs addressed is plotted against the cubic yards of soils treated or removed, as the relationship between cubic yards and costs is proportional. The knee of the curve is the point at which there is a significant increase in costs with a minimal increase in benefit."

GE also asserted that "By proposing to do much more than is necessary to address the alleged significant threats at the Site, at a far greater cost, the Department is proposing a remedy that is outside its authority under the ECL. The Department's authority under Title 13, Article 27 of the ECL is limited to developing remedial programs that are necessary to the elimination, removal, abatement or control of significant threats to the environment. ECL § 27-1301(3) and 1313(3)." The PRAP exceeds the Department's statutory authority because it adds nothing to the GE proposal in terms of addressing the significant threats at the Site.

Response 5: The Department is within its statutory and regulatory authority in favoring the preferred alternative over ones which would not result in abatement of all significant threats posed by wastes disposed at the site. Further, the Department disagrees that there would be no additional benefits, especially as related to the abatement of the significant environmental damage associated with the contaminated overburden groundwater. The Department also does not view the "knee of the curve" analysis presented by GE as being an important factor in remedy selection for this site. A comparison of cost vs. PCB mass addressed may be pertinent in an evaluation of overall feasibility if each alternative being compared would abate the significant threats posed by waste disposal at the site. Instead, the GE "knee of the curve" analysis indicates that approximately one third of the PCB within the soils at the site would remain at the site, resulting in continued releases of PCB and other contaminants from the contaminated soils to the overburden groundwater. Among the soils which would remain at the site are soils containing concentrations of the PCB which, according to GE's comments on the 1999 PRAP for this site, indicate the potential for mobile NAPLs to exist within the soils. The balance of the remaining soils would contain PCBs at concentrations in excess of the concentration determined to impact groundwater

above applicable standards, resulting in continuing significant environmental damage.

Comment 6: GE requested that the Department re-evaluate the proposed soil treatment/removal remedy and fully and fairly take into consideration the relationship between the remedy components. GE also requests that the Department explain in the Responsiveness Summary why it believes the additional dewatering of the soils and the low permeability cap will not effectively prevent the PCBs in the soils from contacting groundwater. GE requested that the Department explain why it believes that the bedrock remedies will not effectively address any PCBs that could possibly migrate from the soils (GE provided for the Department's consideration an analysis of the GE 2002 remedy against the remedy selection criteria later in its commentary.).

Response 6: The Department, as discussed above, has evaluated the GE 2002 proposal and taken into consideration the relationship between the components of the remedial alternatives. The Department believes that the tunnel and drain system would not adequately address the significant environmental damage to the overburden aquifer.

The Department believes that additional dewatering of the soils and installation of a low permeability cap would not abate the significant environmental damage done by the disposal of wastes at the site which have impacted the overburden aquifer. As stated above, the implementation of the 2002 GE proposal would address this significant environmental damage upon the overburden aquifer by rendering the impacted portion of the aquifer permanently unusable.

B. Application of Remedy Selection Criteria

Comment 7: GE asserted that the Department's use of the remedy selection criteria lacks rigor and balance. As a result, the Department's proposed remedy is inconsistent with the New York Environmental Conservation Law (ECL), the Department's implementing regulations and USEPA's National Contingency Plan (NCP). GE stated that a more rigorous evaluation of the combination of the bedrock tunnel system and capping and isolation of the PCB-containing soils would show that this combination would be at least as effective as the Department's proposal for the soils in addressing the significant threats identified in the PRAP.

GE also asserted that the 2002 GE proposed remedy presents fewer short-term risks and would be far easier to implement than the Department's preferred remedy, and that, since the GE 2002 Remedy Proposal is (according to GE) at least as effective in mitigating the significant threats identified by the Department, but costs approximately $26,100,000.00 less (based on GE's 3/2001 estimate of the costs of DEC's remedy and GE's 2002 Proposal), it violates the Department

and NCP requirement of cost-effectiveness.

GE claimed that the Part 375 regulations, which mandate that remedies be "not inconsistent" with the NCP, establish nine criteria to guide the selection of remedies. 6 NYCRR 375-1.10(c); 40 C.F.R. 300.430(f). These are grouped into three different categories: threshold criteria, balancing criteria, and modifying criteria.

GE also claimed that the threshold criteria under the ECL are (1) compliance with standards, criteria, and guidance (SCG's) or applicable or appropriate and relevant requirements (under the NCP); and (2) overall protectiveness of human health and the environment. The balancing criteria are (1) short-term effectiveness, (2) long-term effectiveness, (3) reduction of toxicity, mobility and volume through treatment, (4) feasibility, and (5) cost.

Response 7: GE has, in this portion of commentary, inaccurately represented the remedy selection criteria in 6 NYCRR 375-1.10(c). This portion of the regulation reads:

(c) The program for a site must not be inconsistent with the National Oil and Hazardous Substances Pollution Contingency Plan of March 8, 1990 and must be selected upon due consideration of the following factors:

(1) Standards, criteria, and guidance.

> (i) A site's program must be designed so as to conform to standards and criteria that are generally applicable, consistently applied, and officially promulgated, that are either directly applicable, or that are not directly applicable but are relevant and appropriate, unless good cause exists why conformity should be dispensed with. Such good cause exists if any of the following is present:
>
> > (a) The proposed action is only part of a complete program that will conform to such standard or criterion [of guidance] upon completion; or
> >
> > (b) Conformity to such standard or criterion will result in greater risk to the public health or to the environment than alternatives; or
> >
> > (c) Conformity to such standard or criterion is technically impracticable from an engineering perspective; or
> >
> > (d) The program will attain a level of performance that is equivalent to that required by the standard or criterion through the use of another method or approach.

(ii) A site's program should be designed with consideration being given to guidance determined, after the exercise of engineering judgment, to be applicable on a case-specific basis. (Note: copies of such guidance are available from the Department at its offices located at 625 Broadway, Albany, New York 12233.)

(iii) For purposes of this Part, the terms "standards and criteria" and "guidance" include both those of this State and those of the United States to the extent that they are more stringent than those of this State. (For informational purposes, those of the United States are set forth in a listing in the Response to Comments to the National Oil and Hazardous Substances Pollution Contingency Plan of March 8, 1990.)

(2) Overall protectiveness of public health and the environment.

(3) Short-term effectiveness.

(4) Long-term effectiveness.

(5) Reduction of toxicity, mobility, and volume with treatment. A site-specific remedy that permanently and significantly reduces the volume, toxicity, and/or mobility of the hazardous wastes and/or constituents thereof is to be preferred over a remedy that does not do so. The following is the hierarchy of remedial technologies ranked from most preferable to least preferable:

(i) Destruction, onsite or offsite.

(ii) Separation/treatment, onsite or offsite.

(iii) Solidification/chemical fixation, onsite or offsite.

(iv) Control and isolation offsite or onsite.

(6) Feasibility. A feasible remedy is one that is suitable to site conditions, capable of being successfully carried out with available technology, and that considers, at a minimum, implementability and cost-effectiveness.

(7) Community acceptance.

6 NYCRR 375-1.10(c) provides that the program the Department selects for a site must not be inconsistent with the National Contingency Plan. By using the phrase “not inconsistent with the NCP” in this regulation, the Department sought to ensure that its remedial actions would result in CERCLA-quality cleanups and thus would qualify for cost recovery in an action brought pursuant to the

Comprehensive Environmental Response, Compensation, and Liability Act, 42 USC 9601 *et seq*. CERCLA does not require that a State remedial program incorporate every item of the NCP into the State's remedy selection.

Furthermore, this consideration is only one of several factors that the Department's regulations establish to guide remedy selection. The statute and regulations allow the Department to weigh remedy selection criteria in a manner that may be different from what is provided by the NCP. The Department has complied with its own regulations in reaching this decision.

The GE 2002 remedy proposal would not abate the significant threats posed by the wastes disposed at the site impacting the overburden soils. As to the issue of cost-effectiveness, it is important to note that GE confused "cost" with "cost effectiveness": the fact that a remedial alternative has a higher estimated cost does not mean it can not be cost effective. Similarly, the fact that a remedial alternative has a lower estimated cost does not make it cost effective.

Comment 8: GE also asserted that the GE 2002 Proposed Remedy would fully address the potential for PCB- containing site soils to contribute to groundwater contamination, which would be accomplished by further dewatering the soils and effectively preventing infiltration into overburden soil through installation of a low permeability cap.

Response 8: As stated above, (*see* responses 2 and 3) the Department believes that additional dewatering of the soils and installation of a low permeability cap would not abate the significant environmental damage done by the disposal of wastes at the site which have impacted the overburden aquifer. The implementation of the 2002 GE proposal would address this significant environmental damage upon the overburden aquifer by rendering the impacted portion of the aquifer permanently unusable. The 2002 GE proposal simply does not yield the same result as does the Department's; they are not equivalent since the 2002 GE proposal is much less protective of the resource and a much less permanent remedy.

Comment 9: GE also asserted that the PRAP inappropriately dismisses the effectiveness of a low-permeability cap and ignores pertinent site data by claiming that "contaminant releases would still occur from the highly contaminated soils containing potentially mobile NAPLs." (PRAP, page 30). There is no evidence that the soils presently contain significant quantities of mobile NAPLs. As demonstrated in GE's comments on the 1999 PRAP, and discussed below, (1) there is no mobile reservoir of NAPL in the overburden soils; (2) the NAPL currently present in the overburden soil is at residual saturation and retained in the pore spaces of the soil; and (3) the PCBs were released into the soils prior to 1977 and any NAPLs with the potential to mobilize would have migrated into the bedrock many years ago .

Response 9: The Department has reviewed the distribution of PCB within the soils at the site. Implementation of other remedial alternatives would result in a significant amount of soil remaining at the site which, according to the calculations presented in GE's comments on the 1999 PRAP for the site, could contain mobile NAPLs. Analytical results from soils samples taken from borings HF-35, HF-55BS, P-1(R), P-2(R), P-3(R), P-25(R), P-26(R), P-29(R), P-45(R), P-46(R), RW-2B, RW-3A, RW-3X, SB-4, SB-24, SB-27, SB-121, and SB-122, when compared to GE's own criteria as presented in GE's comments on the 1999 PRAP for the site, indicate the potential for mobile NAPL to be present in these locations that would not be treated or removed under other remedial alternatives. Therefore, GE's capping remedy would not be effective in containing the suspected NAPLs in onsite soils.

Comment 10: GE asserted that the PRAP entirely ignores the fact that any additional migration of PCBs from the soils into the bedrock would have a negligible impact on groundwater quality in the bedrock. Data collected during the RI, as discussed in GE's comments to the 1999 PRAP, show that the bedrock groundwater is significantly contaminated and that any contribution from the soils would have only a negligible effect on exceedances of groundwater quality. As a result of these facts, coupled with the components of GE's 2002 Proposed Remedy, there is virtually no potential for any significant quantities of PCBs in the overburden soils to dissolve into groundwater or to migrate as NAPL.

Response 10: The Department does not accept GE's assertion that the migration of PCB into the bedrock aquifer beneath the site is insignificant. The relative contribution of the contaminated soils to the entire contaminant problem in the bedrock aquifer is not a determining factor whether the PCBs remaining in the overburden soils pose a significant threat. The contaminants remaining in the overburden soils contribute to the contaminant plume in the bedrock aquifer, and are the primary source of the contaminant plume in the overburden aquifer.

Comment 11: GE refers to the passage in the PRAP on page 33 which states: "The estimated cost of Alternative S4 is higher than S1, S2 or S3. This higher cost is offset, however, by Alternative S4 having a higher overall effectiveness. Therefore, Alternative S4 is cost-effective" (PRAP, page 33). GE stated that the Department's combined alternative for soils and groundwater is $26,100,000.00 more expensive than GE's 2002 Proposal and is no more protective. GE also stated that since the PRAP defers the technology selection to the design phase, it cannot be concluded that S4 is more cost-effective.

Response 11: The Department strongly disagrees that its remedy is no more protective than GE's. As stated above, the GE 2002 remedy proposal would not abate the significant threats posed by the wastes disposed at the site impacting the

overburden aquifer; the remedy selected by the Department actively addresses those threats and provides for a remedy.

Also note that GE confused "cost" with "cost effectiveness": as stated above, the fact that a remedial alternative has a higher estimated cost does not mean it can not be cost effective. Similarly, the fact that a remedial alternative has a lower estimated cost does not make it is cost effective.

The Department does not accept that the cost estimates presented in the PRAP should be revised upward. As discussed below in the response to comment 23, the revision by GE of the volume of soil which would be addressed, and the unit cost for treatment, is not appropriate.

Comment 12: GE also commented that the Department gave too little weight to the Department's finding that the PRAP soils remedy is less effective in the short-term due to potential exposure to workers and the community from the large volume of soils that may be excavated for treatment or removal.

Response 12: The Department appropriately considered differences in short term effectiveness between alternatives. The short-term risks associated with the preferred alternative are similar to the risks posed by other remedial alternatives. There are differences between alternatives, as described in the PRAP. These differences are related to varying amounts of material to be treated and/or transported. It is important to note that the 2002 GE remedy proposal would address some (but not all; see response 9, above) of the most highly contaminated soils at the site. It is the management of these soils which would pose the most significant potential for short-term risk; as such, in assessing short term risk, soil concentrations must be considered, not merely soil volumes. GE overstates the actual difference in short-term risk because it doesn't acknowledge that the additional soil treatment in Alternative S4 is primarily of soils with lower PCB concentrations. Both the selected alernative and the 2002 GE remedy proposal would result in treatment of highly contaminated soils at the site.

Comment 13: GE also commented that the Department does not provide any evaluation on whether the potential route of exposure via overburden groundwater is significant or minimal.

Response 13: The Department, (on p. 8 of the PRAP) stated that the significant environmental damage associated with the impact of contaminants (PCBs and VOCs) on the overburden and bedrock aquifers beneath the site, which had been usable in the past for human water consumption, but which are now unusable without treatment due to the presence and resulting impacts of PCBs and VOCs above applicable standards, was one of the bases for the significant threat determination for this site. The relative significance of the impacts on the bedrock aquifer as compared

to the overburden aquifer does not eliminate the need to abate the significant threat associated with the significant environmental damage associated with the impacted portion of the overburden aquifer.

C. Application of TAGM 4046:

The key commenter on the application of TAGM 4046 is General Electric Company ("GE").

Comment 14: GE asserted that the Department's heavy reliance on TAGM 4046 as a basis for its soils remedy is inappropriate because it does not take into account important site specific factors. GE claimed that the TAGM applies simplistic calculations to derive surface soil clean-up levels to protect human health from direct contact threats and subsurface clean-up levels to protect groundwater quality. GE's comments and observations were that:

"1. GE applauds the Department for allowing the use of site specific data to be used in deriving soils clean-up levels as opposed to specifying the generic clean-up values of 1 ppm in the surface and 10 ppm in the sub-surface found in the guidance.

2. GE's proposed capping plan would achieve the 1 ppm TAGM level in soils at the surface. (However, this does not mean GE accepts the Department's exposure and toxicity assumptions given in the TAGM. The TAGM employs PCB toxicology values that do not reflect EPA's current revised cancer slope factor for PCBs that GE believes is still excessively high).

3. The Site has been used for industrial purposes for nearly 200 years and the deed restrictions and institutional controls proposed in the PRAP, to which GE is amenable, would prevent any future residential use. PRAP, page 38 and Appendix B.

4. Most of the highly impacted soils are located under buildings or pavement or within fenced areas and, under GE's proposal, all impacted soils would be covered and remain inaccessible.

5. Further, the presence of significant quantities of PCBs, including NAPLs, in the shallow bedrock (see PRAP, page 13-14) will require remediation indefinitely, precluding the use of the Site for any activity other than remediation. Under these circumstances, basing clean-up levels for surface soils on a

residential exposure scenario is arbitrary. It must also be recognized that any trespassing scenario is highly implausible. The Site is fenced, there are GE remedial personnel on-site all day and the Site is patrolled at night. While random trespassing cannot be entirely ruled out, it is absurd to suggest that the same trespasser or trespassers will access the Site repeatedly and eat dirt located beneath an engineered surface cover. "

Response 14: The Department has considered the comment here that the use of both excavation and treatment of the surficial soils, and the installation of an engineered surface cover, to address direct contact human health exposure is unnecessarily redundant. The Department has revised Alternative S4 to address this comment. Alternative S4, which the Department is selecting in this ROD as the remedial alternative to address the contaminated soils at the site, no longer includes excavation and treatment of the surficial contaminated soils which contain PCB at concentrations above 1 part per million, and below that concentration determined in design to be protective of groundwater. The engineered surface cover, along with routine monitoring and maintenance activities and other controls, will address any potential future direct contact exposures at the site.

Comment 15: GE stated that the purpose of the TAGM for establishing acceptable PCB levels in subsurface samples is to protect groundwater quality. Since site overburden soils that contain PCBs will be largely isolated from groundwater by capping and dewatering, the TAGM is not applicable to the site situation. GE also stated that any groundwater in the overburden at the Site is not used for consumption and, under any of the proposed remedies, will never be used for consumption. GE stated that the existing overburden and bedrock groundwater extraction system has dewatered most of the overburden soil at the Site, and implementation of the bedrock tunnel remedy will further dewater the overburden (with the exception of the area noted previously). GE concluded that there will be no groundwater that may come into contact with the soils.

Response 15: As stated above, the Department believes that additional dewatering of the soils and installation of a low permeability cap would not abate the significant environmental damage done by the disposal of wastes at the site which have impacted the soils and overburden aquifer. The implementation of the other remedial alternative would address this significant environmental damage upon the overburden aquifer by rendering the impacted portion of the overburden aquifer forever unusable by permanently dewatering the impacted portion of the overburden aquifer–effectively eliminating it.

Comment 16: GE asserted that, while there may be sites where it is appropriate to use the TAGM 4046 values or approach to derive clean-up standards, it is arbitrary to apply it to the site-specific conditions at Hudson Falls.

Response 16: The Department is not arbitrarily applying the TAGM 4046 approach to the GE Hudson Falls Plant Site. One of the bases for the significant threat determination, as expressed in the PRAP, is the impact of the contaminated soils on the overburden groundwater. Applying the TAGM 4046 approach at this site (evaluating soil cleanup alternatives by determining what residual concentration of PCB in soils could remain and not result in unusable overburden groundwater for consumption) is appropriate for use by the Department in evaluating which alternatives abate the significant threats posed by hazardous waste disposal at this site.

TAGM 4046 is designed to guide the Department in determining site-specific soil cleanup levels for a contaminated site that the Department does not believe can be feasibly returned to pre-disposal conditions. Its procedures are based upon commonly accepted methodologies; and in fact, USEPA uses the same methodology. The methodology's objective seeks to develop soil cleanup objectives that will, at a minimum, eliminate all significant threats to human health and/or the environment posed by the identified hazardous waste. TAGM 4046 describes the criteria used to guide the determination of soil cleanup objectives.

D. Miscellaneous comments

The key commenter providing other miscellaneous comments is General Electric Company ("GE").

Comment 17: GE also asserted that the Department's PRAP stated (on page 33) that none of the remedial alternatives will allow the NYSDEC Class GA groundwater standards to be met at the Site, and that the dense NAPL will act as a source of contamination to the bedrock aquifer for the foreseeable future. GE asserted that, to address this concern, the Department concluded that the bedrock tunnel collection system was necessary and is expected to prevent further releases of PCBs from beneath the Site to the Hudson River.

Response 17: GE, presenting this comment, did not accurately represent the position of the Department as expressed in the PRAP. The PRAP, on p. 33, reads:

"None of the remedial alternatives would allow the NYSDEC Class GA groundwater standards to be met in the impacted portion of bedrock in the vicinity of the site, since no technology exists at the present time which would allow the complete removal of dense NAPL from the fractured bedrock. Since the dense NAPL will act as a source of contaminants to the bedrock aquifer for the foreseeable future, it is technically impracticable at the present time to completely decontaminate the bedrock aquifer to achieve groundwater standards."

The Department did not state in the PRAP that the NYSDEC Class GA groundwater standards could not be met in the overburden aquifer, as implied in the above comment. Instead, the PRAP makes the following statement, on p. 29:

"Alternatives S1, S2 and S3 would result in continued releases of PCB and other contaminants from the contaminated soils to the groundwater of the state and the environment, contributing to the exceedance of the water quality standards. Alternative S4 would eliminate these soils as a source of continuing groundwater contamination above standards."

(Alternative S4 in the PRAP is the alternative involving removal and treatment and/or disposal of the contaminated soils to a concentration determined to protect groundwater using the TAGM 4046 approach.)

Comment 18: GE also asserted that the GE 2002 Proposal reduces further the possibility of PCBs from the soils causing additional exceedances of groundwater criteria since removal of approximately 65% of the PCB mass would occur.

Response 18: The Department agrees that removal of approximately 65% of the PCB mass within the soils would reduce the possibility that these soils would cause additional exceedances of groundwater criteria. Parenthetically, it is noted that GE implicitly concedes in this comment that removing the PCB contaminated soils reduces the possibility that additional exceedances of groundwater criteria would occur. Removing PCBs from the overburden soils to concentrations guided by the engineering calculations and considerations set forth in TAGM 4046 would eliminate, to the extent practical, the soils at the site as continuing sources of groundwater contamination resulting in significant environmental damage.

Comment 19: GE asserted that:

-the PRAP recognizes that capping effectively addresses direct contact with soils. Soil treatment/removal would also eliminate concerns with direct human contact,

-institutional controls further reduce the possibility of direct contact and are needed not just for the PCBs in the soils, but also for the shallow bedrock.

-all three remedies fully address concerns with direct contact of the soils. The only other potential health concerns are with ingestion of groundwater or with releases of PCB to the Hudson River, and that all the remedies include the bedrock tunnel collection and prohibit withdrawal of groundwater.

Response 19: The Department agrees that there would continue to be a potential health concern with ingestion of groundwater, including groundwater from both the overburden

and bedrock aquifers.

Comment 20: The 2002 GE remedy and the Department's soil removal remedy involve the treatment and/or disposal of contaminated soils resulting in the potential for short-term exposure to workers and the community. However, due to the significant differences in the amount of soils that would be disturbed, there is a significant difference in the magnitude of the short-term risks.

Response 20: As discussed above in response 12, the short-term risks associated with the preferred alternative are similar to the risks posed by the GE 2002 remedy proposal. The differences are directly related to a larger amount of material to be treated and/or transported. It is also important to note that the 2002 GE remedy proposal would address some (but not all) of the most highly contaminated soils at the site. It is the management of these soils which would pose the most significant potential for short-term risk; as such, one should not look only at the difference in soil volume, which overstates the actual difference in short-term risk.

Comment 21: GE asserted that the primary site risks are PCBs entering the river; use of groundwater and direct contact with PCBs. With respect to use of groundwater or PCBs entering the river all three remedies have the same residual risk, which is primarily driven by the PCBs in the fractured bedrock not the PCBs within the soils. (In making this and the following comment, GE is referring to the 2002 GE remedy proposal, a previous GE remedy proposal, and the Department's selected remedial alternative.)

Response 21: Please see response to Comment 1. Additionally, the Department agrees that use of groundwater is one of the primary site risks. However, the Department does not agree that "...all three remedies have the same residual risk"; the most significant difference between the 2002 GE remedy proposal and the preferred alternative identified in the PRAP is that the impacted portion of the overburden aquifer would not be usable at any point in the future under the 2002 GE remedy proposal.

Comment 22: All three remedies provide adequate and reliable controls. Removal of some or all of PCB-containing soils reduces the reliance on capping and institutional controls, but is only a small incremental improvement since the major concern is the PCBs within the fractured bedrock.

Response 22: As stated above, the relative magnitude of threat posed by the wastes disposed at the site which impacted the soils at the site, and of threat posed by the wastes disposed at the site which impacted the underlying bedrock, are not determining factors whether the wastes disposed at the site which impacted the soils constitute a significant threat to human health and/or the environment.

Comment 23: GE also asserted that:

-it is unclear what portion of those soils would be treated as opposed to removed;

-there may be limitations to the technologies selected that would result in off-site disposal

-until these determinations are made, it cannot be said that the PRAP will result in more treatment of the soils than the GE 2002 Proposal.

Response 23: The limitations to which GE refer are primarily based upon the high levels of PCB in some of the site soils to be removed. When comparing the 2002 GE remedy proposal and the preferred alternative identified in the PRAP, the significant difference is in the soils which would be capped (instead of treated) under the 2002 GE proposal; these soils are, for the most part, that portion which do not contain the highest levels of PCB, and would be the most amenable to treatment.

Comment 24: GE asserted that the 2002 GE remedy proposal and the preferred remedial alternative identified in the PRAP stand on essentially the same footing as far as inherent feasibility is concerned insofar as both proposals call for consideration of various treatment technologies during design, but that because the Department's proposal calls for the treatment/removal of far more soil (approx. 5x), it will be that much more difficult to implement.

GE stated that it used an updated soil volume estimate of 37,000 cubic yards based on a Theissen Polygon analysis and engineering best practice as opposed to the 27,100 cubic yard estimate previously developed using a logarithmic distribution method. GE also stated that the Department used an estimated $150 per ton rate for ex-situ thermal treatment based, we believe, on irrelevant experience with petroleum derived contaminants. GE's FS estimated that the unit cost would be $200 per ton based on PCB specific information obtained from vendors. GE believes its estimates are more accurate and should be used in the analysis of cost-effectiveness.

Response 24: The Department does not agree with the soil volume estimates put forth by GE. It appears GE increased the soil volume estimates. Note 48 in the cost estimate presented in the GeoTrans FS ("Recommendation for a Comprehensive Site-Wide Remedy and Feasibility Study for Bedrock Groundwater (OU-2C and OU-2D) Hudson Falls Plant Site", GeoTrans, March 2001) states:

"Impacted soil excavation cost estimate includes labor, equipment, and materials necessary to excavate up to 37,000 in-place cubic yards of impacted soil. The previous excavation estimate and cost estimate presented in the Feasibility Study

for Overburden Soil and Groundwater Operable Units OU-2A and OU-2B (January 1997) and Addendum to Feasibility Study for Overburden Soil and Groundwater Operable Units OU-2A and OU-2B (Dames & Moore, March 1998) represented the approximate minimum volume of soil to be removed to achieve the cleanup objectives. However, additional soil volume was addressed in the 10% miscellaneous and 50% contingency costs presented in the Dames & Moore cost estimate. Excavation limits were modified to reflect the more likely excavation configuration considering uncertainties and a comparison of soil volume estimate methods."

It is clear from this statement that the volume estimate used by GE was increased to make up for the Department not accepting the GE 50% contingency mulitplier in the Department's revisions to GE's cost estimates. GE did not conduct additional soil sampling or survey work to change the volume estimate; the only change was to add in "uncertainty". The Department believes that using the soil volume estimates as presented in the PRAP is appropriate.

GE's claim that "...the Department used an estimated $150 per ton rate for ex-situ thermal treatment based, we believe, on irrelevant experience with petroleum derived contaminants" is incorrect. The Department contacted vendors to determine which unit price to use in the Department's cost estimates prior to issuing the PRAP. The Department also confirmed in late 2003 that the unit price used in the cost estimate was still representative.

E. Comparison between a remedy proposal by GE, and the preferred alternatives identified in the March 2003 PRAP.

General Electric, in its comments on the March 2003 PRAP, provided GE's views on how the remedy selection criteria could be used to compare the 2002 GE remedy proposal, and the preferred remedial alternatives identified in the PRAP. GE's comments are listed below by criterion, along with the Department's responses.

Comment 25: (Standards, Criteria and Guidance) GE asserted here that:

-the 2003 PRAP stated on page 33 that none of the remedial alternatives will allow the NYSDEC Class GA groundwater standards to be met at the site, that the dense NAPL will act as a source of contamination to the bedrock aquifer for the foreseeable future;
-the Department concluded that the bedrock tunnel collection system was necessary and is expected to prevent further releases of PCBs from beneath the Site to the Hudson River;
-shallow groundwater in the contaminated overburden above the bedrock will be largely eliminated due to the dewatering action of the bedrock and shallow

collection and treatment system;
-if infiltration of precipitation occurred, it could at times result in localized areas of groundwater in the overburden soils;
-to deal with this potential migration pathway the original GE remedy proposal included a cap to control the infiltration of precipitation. Therefore, there is little likelihood that PCBs from the soils will cause additional exceedances of groundwater standards;
-the GE 2002 Proposal reduces further the possibility of PCBs from the soils causing additional exceedances of groundwater criteria since removal of approximately 65% of the PCB mass would occur;
-GE's 2002 Proposed Remedy essentially is equivalent to the Department's soils removal remedy in terms of compliance with SCG's.

Response 25: As stated above, the PRAP text does not make the statement as described by GE in this comment. Instead, the text states (on p. 33) "Alternative G4 is expected to prevent further releases of PCBs from beneath the site to the Hudson River. These releases currently contribute to the exceedance of water quality standards in the Hudson River." This statement should not be interpreted as meaning that the tunnel and drain system would effectively address the shallow **overburden** groundwater. The PRAP text clearly states, on p. 29, that the capping alternative would "...result in continued releases of PCB and other contaminants from the contaminated soils to the groundwater of the State and the environment, contributing to the exceedance of the water quality standards." The Department believes that the tunnel and drain system would not adequately address the significant environmental damage to the overburden aquifer.

Comment 26: (Protection of Human Health and Environment) GE asserted here that:

-the PRAP recognizes that capping effectively addresses direct contact with soils;
-soil treatment/removal would also eliminate concerns with direct human contact.
-institutional controls further reduce the possibility of direct contact and are needed not just for the PCBs in the soils, but also for the shallow bedrock;
-all three remedies fully address concerns with direct contact of the soils;
-the only other potential health concerns are with ingestion of groundwater or with releases of PCB to the Hudson River;
-all the remedies include the bedrock tunnel collection and prohibit withdrawal of groundwater.
-the Department has concluded that the tunnel system is expected to prevent further releases from the Site to the Hudson River;
-additionally, groundwater impacts from the soils are addressed by limiting the infiltration of precipitation and dewatering the overburden;
-if the GE 2002 remedy is implemented, 7,600 cubic yards of the most highly contaminated soils (65% of the PCBs in the soils) would be treated and reduce

further the potential for migration of PCBs to the underlying bedrock aquifer.

Response 26: As stated above, the Department's position is that additional dewatering of the soils and installation of a low permeability cap would not abate the significant environmental damage done by the disposal of wastes at the site which have impacted the overburden aquifer. As stated above, the implementation of the 2002 GE proposal would address this significant environmental damage upon the overburden aquifer by rendering the impacted portion of the overburden aquifer forever unusable. The Department agrees that removal of approximately 65% of the PCB mass within the soils would tend to reduce the possibility that these soils would cause additional exceedances of groundwater criteria. The Department also believes, and that belief is supported by GE's comment, that removing PCBs from the site's overburden soils to concentrations the determination of which was guided by the engineering calculations and considerations set forth in TAGM 4046 would eliminate, to the extent practical, the soils at the site as continuing sources of groundwater contamination resulting in significant environmental damage.

Comment 27: (Short-Term Effectiveness) GE asserted here that:

-the 2002 GE remedy and the Department's soil removal remedy involve the treatment and/or disposal of contaminated soils resulting in the potential for short-term exposure to workers and the community, and that due to the significant differences in the amount of soils that would be disturbed, there is a significant difference in the magnitude of the short-term risks;
-capping would have the highest short-term effectiveness, followed by the GE 2002 remedy and then the Department's soils remedy;
-implementation of the Department's soil proposal would create a greater potential for workers and the community to be exposed to site constituents during implementation as a result of the vastly increased volume of soil that would be dug up and treated or removed (Approx. 37,000 cy vs. 7,600 cy).
-the PRAP also poses additional risks associated with additional truck traffic (both local and non-local) that might be required to transport contaminated soils for off-site disposal (if off-site disposal of some or all of the soils is ultimately selected).

Response 27: As stated above (see the response to comment #12), the Department does not agree with the soil volume estimates put forth by GE. The short-term risks associated with the preferred alternative are similar to the risks posed by the GE 2002 remedy proposal. The differences are related to varying amounts of material to be treated and/or transported. It is also important to note that the 2002 GE remedy proposal would address some (but not all) of the most highly contaminated soils at the site. It is the management of these soils which would pose the most significant potential for short-term risk; as such, one should not

look only at the difference in soil volume, which overstates the actual difference in short-term risk.

Comment 28: (Long-Term Effectiveness and Permanence)

Magnitude of Residual Risks**:** GE asserted here that:

-the primary site risks are PCBs entering the river; use of groundwater and direct contact with PCBs;
-with respect to use of groundwater or PCBs entering the river all three remedies have the same residual risk, which is primarily driven by the PCBs in the fractured bedrock not the PCBs within the soils;
-with respect to direct contact risks all three remedies have to deal with the potential for direct contact with PCBs in shallow bedrock. However, this is effectively managed by land use restrictions and restricting future excavations and withdrawal of groundwater;
-for direct contact with soils, capping provides an effective remedy, as do the institutional controls placed on the Site;
-removal of 65% of the PCB mass further reduces the magnitude of the remaining risks from direct contact. Complete soil removal would not allow any additional future use of the property beyond that provided by the GE 2002 Proposal.

GE also asserted here that during design, specific performance criteria will be developed for all three groundwater operable units and the soils. The purpose of these criteria would be to establish long-term O&M plans which will evaluate and demonstrate that the Remedial Action Objectives (protection of human health and the environment) are being met. GE believes that implementation of the 2002 GE remedy proposal would not preclude additional remedial actions if any portion of the plan fails to meet the measurable performance criteria included in the long-term O&M plan.

Adequacy and Reliability of Controls Intended to Limit Risk: GE asserted here that all three remedies provide adequate and reliable controls, and that removal of some or all of PCB-containing soils reduces the reliance on capping and institutional controls, but is only a small incremental improvement since the major concern is the PCBs within the fractured bedrock.

Reduction of Toxicity, Mobility, or Volume Through Treatment: GE asserted here that:

-the 2002 GE remedy proposal would mitigate to the extent practicable the mobility of all site contaminants;
-GE's proposed expanded recovery well network and Tunnel Drain Collection System provide for hydraulic containment of bedrock groundwater and removal

of NAPL, and will control the potential movement of PCBs to the Hudson River;
-the 2002 GE remedy proposal would provide a proven and effective means to reduce constituent toxicity, mobility, and volume by extracting and treating groundwater and NAPL in an expanded water treatment plant;
-the highest concentration PCBs in the soils would be treated or considered for removal. This would address approximately 65% of the PCBs in the overburden soil;
-while the PRAP would treat/remove a larger volume of impacted soils, it is unclear what portion of those soils would be treated as opposed to removed
-various treatment technologies will be evaluated during design, and subjected to demonstration projects to determine their suitability for use at the Site
-there may be limitations to the technologies selected that would result in off-site disposal. Until these determinations are made, GE asserted that it cannot be said that the PRAP will result in more treatment of the soils than the 2002 GE remedy proposal.

Response 28: Magnitude of residual risk: As stated above, the Department agrees that use of groundwater is one of the primary site risks. However, the Department does not agree that "...all three remedies have the same residual risk"; the most significant difference between the 2002 GE remedy proposal and the preferred alternative identified in the PRAP is that the impacted portion of the overburden aquifer would not be usable at any point in the future under the 2002 GE remedy proposal. As to GE's claim that establishing performance standards during design would allow for additional remedial work to be done if the remedial action objectives were not met, the Department concluded that the remedial action objective of "Mitigate the impacts of the contaminated soils at the site" to "Eliminate, to the extent practicable, the releases of contaminants from the soils at the site to the groundwater which contribute to, or result in, violations of groundwater quality standards" could not be met if the GE 2002 remedy proposal were to be implemented. (See Response 25 above.)

Adequacy and Reliability of Controls Intended to Limit Risk: As stated above, the relative magnitude of threat posed by the wastes disposed at the site which impacted the soils at the site, and of threat posed by the wastes disposed at the site which impacted the underlying bedrock, is not a determining factor whether the wastes disposed at the site which impacted the soils constitute a significant threat to human health and/or the environment. The Department is not willing to forego the remedy of the impacted portion of the overburden aquifer simply because it is not of the same magnitude as other remedial components at the site.

Reduction of Toxicity, Mobility, or Volume Through Treatment: The 2002 GE remedy proposal would not mitigate to the extent practicable the mobility of all site contaminants through treatment, as a significant portion of the contaminated soils would be addressed by capping, not removal. As to GE's assertion that the

preferred alternative in the PRAP can not be said to result in more treatment that the 2002 GE remedy proposal, the Department disagrees. The PRAP states, on p. 37, that "Soils which are not amenable to treatment due to technology limitations, or which can not be feasibly treated to the site cleanup levels, will be considered for off site disposal at a properly permitted facility." As stated above, the soil treatment limitations to which GE refer are primarily based upon the high levels of PCB in some of the site soils to be removed. When comparing the 2002 GE remedy proposal and the preferred alternative identified in the PRAP, the significant difference is in the soils which would not be treated under the 2002 GE proposal; there soils are, for the most part, that portion which do not contain the highest levels of PCB, and would be the most amenable to treatment.

Comment 29: (Feasibility) GE asserted here that all three soil remedies are feasible, but to varying degrees, and because the Department's proposal calls for the treatment/removal of far more soil, it will be that much more difficult to implement.

Response 29: The Department agrees that the preferred remedial alternative is feasible. This remedial alternative would use the same technologies for soil removal and treatment and/or disposal as the other remedial alternatives. The only difference is related to project scale.

Comment 30: (Cost-Effectiveness) GE asserted here that:

-the 2002 GE remedy proposal must be considered the most "cost-effective" option;
-the 2002 GE remedy proposal is at least equally effective at dealing with the significant threats identified in the PRAP and less costly, and is therefore more cost-effective;
-GE's estimate for the Department's proposed remedy, including ex-situ thermal treatment of the soil, is $75,200,000.00. These costs are approximately $8,700,000.00 higher than those presented by the Department in the PRAP;
-the two key reasons for the difference in costs are a GE updated soil volume estimate, and use of a different unit cost for soil treatment;
-GE believes its estimates are more accurate and should be used in the analysis of cost-effectiveness.

Response 30: As stated above in the response to comment #23, the Department does not agree with the soil volume estimates put forth by GE. The Department contacted vendors to determine which unit price to use in its cost estimates prior to issuing the PRAP. The Department does not believe that the 2002 GE remedy proposal is "...at least equally effective at dealing with the significant threats identified in the PRAP and less costly, and is therefore more cost-effective." As stated above, the

2002 GE remedy proposal would not address the significant environmental damage associated with the overburden aquifer, and would render the impacted portion of the overburden aquifer forever unusable.

F. How different remedial alternatives would achieve the site Remedial Action Objectives (RAOs).

Comment 31: GE asserted here that GE's proposed soil remedy would meet the RAOs presented in the 1999 PRAP for the site.

Response 31: The Department is using a set of RAOs for this site as presented on p. 20-21 of the 2002 PRAP. They are:

Mitigate the impacts of contaminated groundwater on human health and the environment:

- Eliminate, to the extent practicable, the potential for contaminated groundwater, which does not meet NYSDOH Part 5 Drinking Water Quality Standards, to be used as a drinking water supply.
- Eliminate, to the extent practicable, off-site migration of groundwater that does not attain NYSDEC Class GA Ambient Water Quality Criteria.

Mitigate the impacts of the contaminated soils at the site:

- Eliminate, to the extent practicable, the potential for direct human or animal contact with the contaminated soils on site.
- Eliminate, to the extent practicable, the releases of contaminants from the soils at the site to the groundwater which contribute to, or result in, violations of groundwater quality standards.

Mitigate the impacts of the contaminants at the site on the Hudson River:

- Eliminate, to the extent practicable, the migration of PCBs into the Hudson River via erosion of PCB contaminated soils, transport of suspended sediment with surface water, and transport of PCBs contained in non-aqueous phase liquids (NAPLs), ground water or surface water.
- Eliminate, to the extent practicable, migration of NAPL to the Hudson River and other off-site areas through removal and hydraulic management.
- Eliminate, to the extent practicable, the migration of PCBs from the site to biota in or near the Hudson River.

The 2002 GE remedy proposal would address most, but not all of these RAOs. The 2002 GE remedy proposal would not mitigate the impacts of the contaminated soils on the overburden groundwater, as releases of contaminants from the soils resulting in violations of standards would continue. These releases

would result in continuing significant environmental damage to the groundwater resource.

The Department also received comments from three environmental advocacy groups; Hudson River CARE, Scenic Hudson, and Friends of a Clean Hudson. Their comments, and the Department's responses, are below.

Comment 1: Since the March, 2003 PRAP proposes no fixed cleanup standards for this site; but rather intends to rely heavily on evolving and emerging cleanup technologies, Hudson River CARE requests that DEC stipulate in the final ROD, that the least acceptable cleanup standard for this site will be consistent with state TAGM 4046 standards. This is of concern since site 5-58-013 has PCB concentrations of up to 250,000ppm, and it is expected that a GE cleanup required to at least attain minimum TAGM 4046 standards will be very costly. In the event evolving and emerging cleanup technologies can attain PCB/VOC cleanup standards in excess of TAGM 4046, Hudson River CARE would encourage DEC to consider such additional standards, to further safeguard public health, and also limit future exposure to PCB's and other VOC's throughout the Hudson River watershed.

Response 1: The Department is removing PCBs from the site's overburden soils to concentrations the determination of which was guided by the engineering calculations and considerations set forth in TAGM 4046 in order to determine contaminant concentrations in soil which will impact groundwater and give rise to significant threat to human health and/or the environment. The Department believes that use of the TAGM 4046 approach is protective.

Comment 2: While Hudson River CARE philosophically endorses the use of evolving or emerging cleanup technologies no discussion in the PRAP is given to how such choice will be made. Will DEC mandate "the best" cleanup technology then available, irrespective of cost, or will final selection be determined solely by feasibility and lowest cost to remedy this site. Hudson River CARE respectfully requests that DEC address on what basis water, soil and air cleanup technologies for this site will be ultimately chosen.

Response 2: The selection of technologies in the design phase will be determined by a combination of feasibility and performance. The Department will consider:

(1) how well the use of a technology will help achieve the remediation goals for the site;
(2) the potential for short term impacts during remediation;
(3) the feasibility of using the technology, including implementability and cost-effectiveness.

The Department does not believe that it is appropriate to mandate, for this site, any technology without considering cost-effectiveness. The Department is required by regulation to consider cost-effectiveness

Comment 3: Because of the highly toxic nature of this 14 acre site; the fact the PRAP is so non-specific concerning specific cleanup technologies/standards; and the fact the PRAP is the last normal venue for the public to provide meaningful input on the cleanup process, before publication of the ROD for this site, Hudson River CARE requests that DEC allow one additional public comment period after the "proposed ROD" is published. While we recognize this would be highly unusual, it is also highly unusual for the public to have to provide it's last meaningful input on a document so non-defined. If a "proposed ROD" were published allowing the public to comment on more specific standards and technologies greater faith would exist in the project. As presently drafted the March, 2003, PRAP requires the Village of Hudson Falls and other affected down river communities to simply "trust" that their concerns will be protected as the ROD goes to final publication.

Response 3: The Department will provide, at appropriate times throughout the remedial design program, opportunities for public participation.

Comment 4: As previously discussed at both the May, 2003 DOH health meeting, and in direct discussion with DEC Project Managers for this site, Hudson River CARE formally requests that the force mains in the vicinity of Sumpter and John Streets in Hudson Falls, NY. be fully evaluated for the presence of toxic PCB/VOC's. Further, we request that all inactive and active sewer lines, storm water management points of entry and any other sewer capacity, connecting from site 5-58-103, and continuing into either the Village of Hudson Falls sewer system; or connecting to Washington County Sewer District number 2, be certified as free from PCB/VOC's. In the event toxic contamination is found in any sewer line, force main or storm water management access point, we request that the cost to cleanup or replace that sewer capactity be borne by GE, as part of the associated costs to cleanup their plant site.

Response 4: The Sumpter Street municipal sewer was found to be contaminated during the remedial investigation of the GE Hudson Falls Plant Site. In 1994, GE implemented Interim Remedial Measures (IRMs) to address this situation. GE, with the approval of the Department, removed the sewer from service and performed an extensive sewer cleaning program. The Sumpter Street sewer line, in 1995, was subsequently replaced by GE, with the approval of the Department. The former Sumpter Street sewer was converted into a groundwater and PCB oil recovery system, which is currently in use.

The Department does not believe that the new Sumpter Street sewer line, which passes through the GE Hudson Falls Plant Site, is impacted by site contaminants,

as it was designed and constructed at an elevation above the groundwater along the west side of Sumpter Street.

Comment 5: (Building Demolition) Under this alternative, buildings 1, 1A, 2, 3, and 4 will be demolished. It is important that the building material be properly sampled and tested so that it is appropriately disposed of.

Response 5: The building material will be characterized prior to disposal. The applicable regulatory framework pertaining to disposal of this material will be followed.

Comment 6: (Cleanup levels) Although the State has used the NYS Standards, Criteria, Guidance (SCG) in soils for cleanup of PCBs as set forth in TAGM 4046 (1 ppm PCB in surface soil, 10 ppm PCB in subsurface soils), it is our understanding that TAGM 4046 guidance will be used to set site-specific cleanup standards for the Hudson Falls plant site. It is also our understanding that this standard will be calculated to protect groundwater. We are supportive of achieving a stringent cleanup level that is protective of public health by protecting groundwater and a standard that is also protective of the environment and eliminates continuous discharges through runoff and others means to the Hudson River. Soil cleanup levels should be achieved that prevent the leaching or movement of any contaminants from the site via any environmental media – soil, water or air.

The final soil cleanup level will be determined during the design phase of the cleanup using site-specific data and parameters that will also be gathered during design. We strongly encourage the Department to actively engage the public in the development of these standards and keep the public informed of the parameters to be used and ultimately what soil cleanup levels will be used. It would be useful to make the proposed soil cleanup levels available for public review and comment.

Response 6: As stated above, the Department will provide, at appropriate times throughout the remedial design program, opportunities for public participation.

Comment 7: (Treatment of Soils) We commend the Department for its efforts to explore potential treatment options for dealing with contaminated soils. Finding useful practical alternatives to landfilling that are also protective of the environment and public health is necessary in efforts to remediate this and other hazardous waste sites.

Treatment can increase the overall effectiveness of the cleanup and reduce the need for landfilling. Any short-term increased costs of applying treatment technologies over landfilling provide long term benefits and reduces costs of maintaining and monitoring hazardous waste landfills for years into the future.

Response 7: As stated in the description of the selected remedial alternative in the ROD,

"Soils which are not amenable to treatment due to technology limitations, or which can not be feasibly treated to the site cleanup levels, will be considered for off site disposal at a properly permitted facility." (ROD, Section 8)

The Department anticipates that the soils at the site which exceed the soil cleanup level determined to protect groundwater will be treated on-site. Soils which can not be treated by available technologies will be considered for off-site disposal.

As stated above, the selection of technologies in the design phase will be determined by a combination of feasibility and performance. The Department will consider:

(1) how well the use of a technology will help achieve the remediation goals for the site;
(2) the potential for short term impacts during remediation;
(3) the feasibility of using the technology, including implementability and cost-effectiveness.

The Department does not believe that it is appropriate to mandate, for this site, any technology without considering cost-effectiveness. The Department is required by regulation to consider cost-effectiveness

Comment 8: Selection of treatment technologies will also occur during the design of the remedy. Again we encourage public input and concerted efforts to keep the public informed.

Response 8: As stated above, the Department will provide, at appropriate times throughout the remedial design program, opportunities for public participation..

Comment 9: The PRAP indicates that demonstration projects will be used "to determine which technologies are most applicable to the contaminated soils at the site." Potential technologies include – thermal desorption, solvent washing, soil washing, or in-situ thermal treatment. Is this list of potential treatment technologies all-inclusive or will other treatment technologies such as vitrification or others be examined?

Response 9: The list of potential technologies in the PRAP was not intended to limit which technologies could be evaluated in remedial design, but rather to illustrate some technologies which may be appropriate to include in the evaluation process.

Comment 10: Will the demonstration projects occur during the design phase of the project? What standards will be used to regulate the demonstration projects, what types of monitoring will be employed and what criteria will be used to select the treatment

technology or technologies that will ultimately be used?

Response 10: The evaluation of treatment technologies will occur during remedial design. Any treatment of contaminated soil will be governed by the existing regulatory framework for this type of waste management. The scope and details of the monitoring program will be developed during remedial design prior to any treatment of soil.

As stated above, the selection of technologies in the design phase will be determined by a combination of feasibility and performance. The Department will consider:

(1) how well the use of a technology will help achieve the remediation goals for the site;
(2) the potential for short term impacts during remediation;
(3) the feasibility of using the technology, including implementability and cost-effectiveness.

Comment 11: The PRAP states "soils which are not amenable to treatment due to technology limitations, or which can not be feasibility treated to the site cleanup levels, will be considered for off site disposal at a properly permitted facility." Will treated soil also have to meet the site-specific cleanup levels that are going to be developed during the design phase? Is it possible that contaminated soils, once treated can remain at levels that are too contaminated to be disposed of on-site and will still need to go to a "permitted facility"?

Response 11: The Department anticipates that the treated soil will meet the site cleanup level. It may occur that some portion of the soil undergoing treatment will not meet this site cleanup level; such soils may be disposed off site, or may be subjected to a different treatment technology.

Comment 12: The PRAP identifies approximately 27,100 cubic yards of soil that will be treated. Is this the total amount to be removed? How much PCB contamination is contained in this material? If this is the total to be removed, does the NYSDEC have an estimate of how much material can be treated and how much is too highly contaminated and must go directly to a permitted facility?

Response 12: As discussed in Section 7.1 of the ROD, the Department currently estimates that approximately 23,900 cubic yards of soil will be excavated and treated. This estimate is based upon the generic TAGM 4046 PCB cleanup criterion of 10 ppm PCB in the subsurface to protect groundwater. The Department believes that the volume estimate of approximately 23,900 cubic yards of subsurface soil is within the +50%/-25% level of accuracy typically used in Feasibility Studies and remedy selection.

The Department estimated (*see* Section 4.1.3 of the ROD) that the amount of PCB mass within the soils at the site is between 80 - 264 metric tons, depending on the estimating method used.

The Department currently anticipates that all of the contaminated soils at the site can be treated by available technologies. As a result, no estimate can be provided at this time of the volume of soil which "...is too highly contaminated and must go directly to a permitted facility."

Comment 13: Again it is important to engage the public in the selection of treatment technologies, actively seek public input and support and keep the public informed about activities related to treatment.

Response 13: As stated above, the Department will provide, at appropriate times throughout the remedial design program, opportunities for public participation.

Comment 14: (Cost) On page 26 the cost identified for Operation and Maintenance for remedy selection S4 is $234,000.00. On page 37 this cost is stated at $239,000.00

Response 14: The correct estimated cost for Operation and Maintenance is $239,000.

Comment 15: The PRAP clearly identifies GE as the PRP for this site. We fully anticipate the State will hold GE liable for payment of these remedies.

Response 15: In the State Superfund program, the Department will (for sites where a responsible party can be identified) attempt to obtain agreements with the responsible party for implementation of the selected remedy identified in the Record of Decision for the site. If such an agreement can not be reached, the Department may use the resources available to undertake the selected remedy, and seek recovery of costs at a later time. The Department anticipates that negotiations with the responsible party for this site, GE, will occur after the Record of Decision is issued.

Comment 16: (Enhancement of Existing Remedial System with Tunnel and Drain System) As previously stated we are very concerned about the continued migration of contaminants from the Hudson Falls site to the Hudson River and urge the NYSDEC to issue a decision as soon as possible and implement this remedy in a timely fashion that results in completion of this remedy prior to the implementation of the U.S. EPA sediment removal project that is slated to begin in 2006.

While we support this chosen remedy we are not clear as to the extent the remedy

will reduce, minimize or prevent the migration of contaminants into the Hudson River.

On page 29, second paragraph, of the PRAP it is stated that the remedy will be "designed to prevent the migration of all site-related contaminants to the Hudson River." Yet also on page 29, fourth paragraph, it is stated that the remedy will be "designed to minimize the migration of site contaminants to all off site areas, including the Hudson River." And yet again on page 39 it is stated that the tunnel project "would eliminate the site as a source of contaminants contributing to the exceedance of surface water standards in the Hudson River…"

Will the tunnel and drain project serve to eliminate the site as a source of PCBs to the river or will it minimize the PCB load? If it minimizes the load does NYSDEC have an estimate of what load of PCBs this site will continue to contribute to the Hudson River?

Response 16: The Department anticipates that the enhancement of the existing remedial system with the tunnel and drain system will be effective in preventing further migration of site contaminants to the Hudson River. The design and construction of the tunnel and drain system will be done to maximize the effectiveness of the system. The Department does not have an estimate of what the load of PCB from this site to the river may be in the future.

Comment 17: We are also concerned that "None of the remedial alternatives would allow the NYSDEC Class GA groundwater standards to be met in the impacted portion of bedrock in the vicinity of the site, since no technology exists at the present time which would allow the complete removal of dense NAPL from the fractured bedrock. Since the dense NAPL will act as a source of contaminants to the bedrock aquifer for the foreseeable future, it is technically impracticable at the present time to completely decontaminate the bedrock aquifer to achieve groundwater standards" pp 33-34. Does this mean that if the technology becomes available to remove the contaminants from the fractured bedrock could it possibly be employed in the future?

Response 17: One of the elements of the selected remedy is that there will be an annual evaluation to determine if technology or other developments have progressed to allow standards to be met.

Comment 18: (Long Term Monitoring) The PRAP identifies the need for long-term monitoring due to the continued presence of untreated hazardous waste remaining at the site. Please inform us of the amount of hazardous waste that is to remain at the site after cleanup, the levels of remaining contamination, and why the waste is being left at the site. We anticipate that this long term monitoring program will be set up

during the design phase. Again we encourage that the public be kept informed of this and other design issues.

Response 18: The Department does not have an estimate of the amount of hazardous waste within the bedrock at the site. It would be very difficult to gather the information necessary to make an accurate estimate of the mass of DNAPL within the bedrock to within a reasonable degree of certainty. The Department did not need to estimate the contaminant mass present to select remedy for this site.

As stated in the ROD in Section 7.2, no technology exists at the present time which would allow the complete removal of dense NAPL from the fractured bedrock. This is the basis for the statement that untreated hazardous waste will remain at the site.

The Department will provide, at appropriate times throughout the remedial design program, opportunities for public participation.

Comment 19: The annual renewal and certification of the institutional controls including deed notices, access controls and long term monitoring is critical.

Response 19: The Department agrees that the annual renewal and certification of the institutional controls is an important element of the remedy for this site.

Comment 20: (Interim Remedial Measures) As previously stated we commend the Department for the measures it has taken to date to remediate the hazardous contamination at this site. However, there is a need to be more clear as to how long into the future it is anticipated that ongoing remedial systems that are currently in place, such as the pumping and treatment of the groundwater will continue and what factors will be used to determine how long they will operate.

It would also be useful to know what has been done to monitor the remedial activities that have already occurred, For example is there continuous monitoring and testing in Eastern Raceway and Tailrace Tunnel.

Response 20: The Department anticipates that the recovery and treatment of groundwater and NAPL at this site will continue for the forseeable future. Monitoring of the groundwater, and of the groundwater and NAPL recovery and treatment system, has been ongoing since the early 1990's, and is anticipated to continue for the forseeable future. This monitoring includes periodic sampling of monitoring wells and recovery wells, seepage collection points, and at key points in the recovery and treatment system, including at various stages in the treatment plant.

Comment 21: We support the State's remedy selection for the Hudson Fall site. We anticipate that the State will develop site-specific cleanup standards and treatment

technologies that are protective of public health and the environment and will involve and engage the public in these decision-making processes. We urge the State to issue a Record of Decision in a timely fashion and that the State require GE to implement both the soil treatment and tunnel and drain remedies prior to the implementation of EPA's river sediment removal project that is slated to begin in 2006.

Response 21: The Department will seek to have the selected remedy implemented in a timely manner after issuing this Record of Decision. The Department agrees with the following statement made by USEPA in the Hudson River Record of Decision, which refer to the timing of control of releases from the GE plant sites in Hudson Falls and Fort Edward relative to the start of the Hudson River sediment remedial program.

On p. 11 of the Responsiveness Summary Executive Summary, USEPA stated that: "The anticipated controls at GE's Hudson Falls facility and remediation in the vicinity of the Fort Edward 004 outfall should reduce that input within the next few years. EPA acknowledges the importance of further remediation of upstream sources and will work with NYSDEC and GE to control these sources to the extent practicable. However, given existing PCB sediment loads, complete control of these upstream sources is not necessary prior to sediment removal."

The Department also received comment by phone from Village of Hudson Falls Mayor Michael Cronin. Mayor Cronin expressed interest in the possibility of industrial reuse a portion of the site.

Response: The Department would allow reuse of a portion of the site after the construction activities related to implementation of the remedy are complete. Future use of the site would need to take into account the restrictions on use of the site, in accordance with Appendix B of this ROD, entitled "Restrictions for Future Use of the GE Hudson Falls Plant Site, #558013"

1 NEW YORK STATE
DEPARTMENT OF ENVIRONMENTAL CONSERVATION
2 DEPARTMENT OF HEALTH
3 PUBLIC MEETING
PROPOSED REMEDIAL ACTION PLAN (PRAP)
4 G.E. HUDSON FALLS PLANT SITE

5
DATE: April 30, 2003
6
TIME: 7:10 p.m. to 8:00 p.m.
7
LOCATION: Washington County Office
8 Building B, Room 230A
383 Broadway
9 Fort Edward, New York 12828
10 PRESENTOR: Kevin L. Farrar
NYS Department of
11 Environmental Conservation
625 Broadway, 12th Floor
12 Albany, New York 12233-7016
Telephone: (518) 402-9774
13 Facsimile: (518) 402-9020
E-mail: kxfarrar@gw.dec.state.ny.us
14
15
16
17
18
19
20
21
22 ORIGINAL
23
24
25

1 ALSO PRESENT:
2 Krista Anderson
Mike Komoroske
3 Ed LaPoint
Jim Ludlam
4 Donald Miles
Ron Sloan
5
PUBLIC SPEAKERS:
6
Joe Gardner
7 Jerry Mabb
Jim Regan
8 Tim Sweeny
9
10
11
12
13
14
15
16
17
18
19
20
21
22
23
24
25

1 (The hearing commenced at 7:10
2 p.m.)
3 (A power point presentation was
4 presented off the record.)
5 MR. FARRAR: Questions, comments?
6 MR. REGAN: My name is Jim Regan
7 (phonetic spelling). I live in Ballston Spa, New
8 York. Also having worked with the Department, but
9 not on this particular project, how long would it
10 take to do the construction for both of those
11 alternatives; to implement them?
12 MR. FARRAR: I believe in the --
13 the F.S. for the ground water -- the preferred
14 alternative, the tunnel and drain is about a two-year
15 design and -- as well as -- maybe the alternative,
16 there's a lot of work that has to be done in design,
17 so that might be a little longer than that.
18 I'm sure there's got to be somebody
19 else that wants to ask questions.
20 MR. SWEENY: Tim Sweeny (phonetic
21 spelling), Clearwater (phonetic spelling), with
22 regard to the S four, that's one that requires the
23 building demolition; right?
24 MR. FARRAR: The only one that
25 wouldn't require demolition would be the first one,

1 because you've already put the soil cover or the cap.
2 The buildings would still have to come down.
3 MR. SWEENY: When the buildings are
4 demolished is that material hazardous then, the
5 actual building material?
6 MR. FARRAR: There's -- there's
7 been some -- actually quite a bit of abatement of
8 building materials are ready for sample T (phonetic
9 spelling). There's a very large asbestos abatement.
10 Does that -- does that complete the
11 asbestos?
12 MR. LAPOINT: All except the roof.
13 MR. FARRAR: All except the roof.
14 There's probably some surfaces that will be
15 contaminated. The base of the building, one for
16 example. There may be surfaces that are
17 contaminated, but there would have to be a building
18 decommissioning that would happen first, and then
19 there would be demolition. There would have to be
20 controls on the demolition, for example, to mitigate
21 any dust migration. Demolition can be dusty. We
22 talked about that at the accountability session this
23 afternoon. Some people were concerned about that.
24 And the way we tentatively deal
25 with that is making sure that you abate to the extent

1 that you can, so there's not much contamination left
2 in the building, and then essentially through keeping
3 it damp can minimize dusting.
4 And there would also be air
5 monitoring. During any intrusive work there would be
6 air monitoring for all different type of workers and
7 to protect the community as well.
8 MR. SWEENY: So, then after the
9 fact that demolition -- demolished material can go
10 anywhere or --?
11 MR. FARRAR: It -- it would -- it
12 would have to be characterized. I don't want to say
13 right now that it could all go through C&D Dump or
14 that would all have to go to -- it would have to be
15 characterized in according to whatever classification
16 that would have to be managed, then.
17 MR. REGAN: Jim Regan again.
18 You -- you said the depth of the tunnel would be
19 below plunge pool elevation. Approximately how far
20 below existing grade?
21 MR. FARRAR: Over a hundred feet I
22 believe --
23 MR. REGAN: Over a hundred feet?
24 MR. FARRAR: -- where they would
25 enter.

1 MR. LAPOINT: Well, let me -- it's
2 sixty feet below the bottom of the plunge pool. So,
3 if the plunge pool is thirty foot deep, then it will
4 be at sixty foot of rock, and then the tap.
5 MR. FARRAR: And then it's about
6 eighty feet down from -- or a hundred feet from
7 ground level to get down to the water level of the
8 plunge pool. And then the plunge pool is a few -- at
9 least ten feet deep and then another eighty feet
10 below that. So, it's a couple of a hundred feet
11 down.
12 It will be a vertical shaft that's
13 put down. You look on this figure, the vertical
14 shaft is essentially the southeast portion and that's
15 in the southwestern portion of the site between where
16 the boiler house is and between the development and
17 beyond the foundries. There's a lot there. That's
18 where the -- the down shaft would be, the access.
19 The drill -- the drilling of the tunnel would be by
20 tunnel boring machine.
21 MR. REGAN: Would -- it would be by
22 a small tunnel borer?
23 MR. FARRAR: Around a ten or twelve
24 foot diameter.
25 MR. REGAN: Ten or twelve foot

1 diameter?
2 MR. FARRAR: But there would have
3 to be a vertical shaft that's cut down into the rock
4 first to allow for the tunnel machine to get down in
5 elevation and get enough room to get started.
6 MR. REGAN: And how does the tunnel
7 work?
8 Is it basically gravity flow into
9 the tunnel from the radiant levels to go up, or --?
10 MR. FARRAR: In the feasibility
11 studies drawings -- I can pull them out later if you
12 want to look at them, where it shows that the
13 vertical drains that go up into the rocks from the
14 tunnel, there's going to be vertical drains that are
15 drilled up into the rocks to enhance the drainage.
16 Each one of those will be metal-bolted to a pipe.
17 And hopefully we'll be able to separate out the
18 P.C.B. oil and the water.
19 But you know, originally the job
20 had recovery valves and it should through design the
21 piping be able to keep the oil and the water separate
22 as we can. That will be manifolded and hooked up for
23 treatment and management for treatment.
24 Questions, comments?
25 Is there anything anybody doesn't

1 understand they would like me to go over again?
2 MR. GARDNER: Kevin, Joe Gardner
3 (phonetic spelling) from the Appalachian Mountain
4 group. I -- I just thought it was appropriate -- I
5 was here for the afternoon session -- a good session
6 too -- this really is a continuation of a major
7 project that's been underway for a good several
8 years, probably what, 1995 --
9 MR. FARRAR: The --
10 MR. GARDNER: -- when they started
11 their --?
12 MR. FARRAR: -- the most
13 significant processing plant -- yeah?
14 MR. GARDNER: It's amounted to
15 something like two hundred million dollars.
16 MR. FARRAR: I -- I -- I don't know
17 what the amount is, but -- I -- I don't know what the
18 amount of money is that G.E. has spent. Well, since
19 I would say late '92 or early '93, there's been a
20 significant effort on the part of the company to
21 abate a lot of their leases from the site to the
22 river. There was, I -- I believe, a dozen or a
23 dozen -- dozen major efforts. I just outlined the
24 most important ones. But there was a significant
25 amount of -- the -- the seepage collection system is

1 quite extensive.
2 Out in Baker's Falls there was a
3 seepage collection system that eventually was built
4 and concreted over, so it runs twelve months a year.
5 There's people that go out on the waterfall every day
6 in the summer and collect it. There is probably like
7 eighteen bedrock recovery systems, and about a dozen
8 over-burden recovery systems that are run all the
9 time.
10 There was a significant amount of
11 sedimentary removal out of the mill and raceway
12 structures and the tailrace tunnel. The majority
13 that came out of tailrace tunnel was probably
14 averaged three to five percent P.C.B. It was a very
15 high concentration in direct communication with the
16 river, and that was done -- a fairly significant
17 effort through the winter of '93, '94. And as you
18 saw in the graphs, it made a significant difference
19 in water volume in the river.
20 MR. GARDNER: And -- and excuse
21 me -- and this will essentially set -- be the
22 solution to the so-called three ounces of P.C.B.'s
23 that are still going into the river every day -- a
24 week, as part of the remediation plan?
25 MR. FARRAR: The -- the goal of the

1 proposed remedy is to eliminate to the extent that we
2 can the remaining P.C.B. that's coming out of this
3 plant into the river; yes, sir.
4 MR. MILES: And it's also developed
5 to give this kind of fire to the dredging -- the --.
6 MR. FARRAR: It doesn't state that
7 in the PRAP, that it has to happen before that.
8 MR. MILES: But that would be a
9 reasonable thing to achieve for; right?
10 MR. FARRAR: Well, I -- I think
11 it's something that could be done, and it would be
12 reasonable to do as long as it makes sense in the
13 implementation of the project. You don't want to
14 rush it. You want to make sure the design is done
15 properly; that it's implemented properly.
16 We really don't see a need that it
17 absolutely all has to be done before the dredging
18 starts, but it would be done.
19 MR. MABB: My name is Jerry Mabb.
20 How far down generally is the --
21 the shelf -- the shelf you speak of from the surface
22 of the ground?
23 MR. FARRAR: In the vicinity of the
24 buildings, it's probably -- under the -- under the
25 building itself the bedrock is right there, because

1 there's a fairly deep shelf under building one for
2 example. The depth from surface to bedrock other
3 than that is on the order of twelve, fourteen,
4 sixteen feet. It varies of course. I mean as you
5 get closer to the river it's a little less.
6 MR. MABB: Okay. The question I
7 have is due to, say the -- the runoff of water in the
8 spring or heavy rains or whatnot, would it have any
9 bearing like to the cellars in the residential area
10 being it's -- you know, most of the cellars are quite
11 a ways --?
12 MR. FARRAR: Well -- well, we
13 didn't find -- I wish I had a bigger -- we didn't
14 find over-burdened -- overburden in this aisle east
15 of the railroad tracks. It's because the ground
16 water in the over-burden is migrating towards the
17 river.
18 Let's see if I can find a figure.
19 MR. MABB: Were there testing in
20 basements and whatnot as far as --?
21 MR. FARRAR: We did not -- we did
22 not test basements, because we didn't see any burden
23 exposure. If the ground water from the site have
24 moved from the buildings to the east --
25 MR. MABB: Uh-huh.

1 MR. FARRAR: -- that's something
2 that we would have considered doing. Beyond P.C.B.
3 there also is some areas of soil that have a lot of
4 solvents in them, as well as organics, where if that
5 had gotten under houses it would have been something
6 we would consider.
7 MR. MABB: The issue -- you know,
8 the concern I have is that we -- we spoke earlier in
9 the afternoon about the -- the vicinity of the tracks
10 to where these houses are, just west or east of the
11 track.
12 MR. FARRAR: Uh-huh.
13 MR. MABB: You know, the -- the
14 problem I have with that is that -- you know, there
15 are basements in each one of these houses, and you
16 know, you say you didn't test those areas.
17 Whose to say that there's not a
18 problem under these peoples houses?
19 MR. FARRAR: Can you hit the light
20 for a minute, Mike? I just want to show him on -- on
21 this map. In the over-burden, in the soils above the
22 rock, in the vicinity of the buildings there's very
23 high levels of contamination in the over-burden,
24 because the soils in that area have a significant
25 amount of contaminants.

1 What we see is the ground water
2 moves from the hill towards the river, essentially to
3 the west, and on the east side of the tracks we don't
4 see contamination of the ground water, essentially
5 because it's upgraded -- it's uphill, ground water
6 wise. And we didn't think that there was any way,
7 other than migrating through the ground water, that
8 it could get into the vicinity of the -- these
9 houses.
10 MR. MABB: Well, how about these --
11 these shelves of bedrock you spoke of earlier, and
12 what if they tipped --
13 MR. FARRAR: Okay.
14 MR. MABB: -- the other way?
15 MR. FARRAR: They -- they -- they
16 tip to the southeast.
17 MR. MABB: Uh-huh.
18 MR. FARRAR: One of the geologic
19 fortunate things we have here, is that other than in
20 the vicinity of these buildings there's an
21 increasingly thick layer of clay as you go to the
22 east. So, on top of the rock there's a fairly thick
23 layer of clay. There's a little bit of till and then
24 some lay clay. The gray clay you may be familiar
25 with, some areas around here, and then stand on top

1 of that.
2 Again, if we hadn't found that and
3 there was contaminants in the bedrock, with no
4 confining layer, nothing to keep contaminants from
5 coming up, again that may have forced us to do
6 some -- over here, but the contamination to bedrock
7 in this part of the site is eighty or ninety feet
8 down, as well as having a pretty thick layer of clay,
9 at least ten feet of clay above it.
10 So, we didn't see any potential
11 root of exposure here.
12 MR. MABB: How many test drills did
13 you do on that side of the tracks?
14 MR. FARRAR: On this side, I -- I
15 can't give you the number. I'd have to pull the
16 number out.
17 MR. MABB: Uh-huh.
18 MR. FARRAR: You can stay after the
19 meeting, and I'll pull the report out and we can look
20 at it.
21 MR. MABB: I mean as compared like
22 one for every twenty on the other side, would that be
23 fair, or --?
24 MR. FARRAR: I -- I don't want to
25 go from memory.

1 MR. MABB: Uh-huh.
2 MR. FARRAR: You probably --.
3 MR. LAPOINT: We came right over
4 here -- close did we --.
5 MR. FARRAR: This is all the soil
6 boring bed.
7 Why don't you turn the light back
8 on, Mike?
9 I don't know if this is going to
10 have the wells on it. This has all the soils --.
11 MR. LAPOINT: I think he's asking
12 about the soil boring just east of the track.
13 MR. FARRAR: Oh, soil borings east
14 of the track.
15 MR. LAPOINT: I mean, one of those
16 figures will have that in it.
17 MR. FARRAR: Yeah. One, two,
18 three, four, five, six, seven, eight, nine, ten,
19 eleven, twelve. There's twelve on the east side of
20 the river tracks in the soil.
21 MR. MABB: And that satisfies you
22 as not having any problem to that side of the track?
23 MR. FARRAR: They -- they're --
24 they didn't have any -- they're all, I think, pretty
25 much -- or very, very low levels.

1 MR. MABB: I'm not so sure of the
2 people that live over there would have the same
3 opinion, you know, that -- you know, I -- I would
4 like to see some more borings, and I'd like to go on
5 record --
6 MR. FARRAR: Okay.
7 MR. MABB: -- saying I'd like to
8 see more -- some more work done on that side to make
9 sure that there's -- you're not leaving those
10 people --
11 MR. FARRAR: Well --
12 MR. MABB: -- with problems in
13 their basements.
14 MR. FARRAR: -- in -- in remedial
15 design it is quite likely that there will be
16 additional borings along the eastern edge of the
17 areas that are close to the -- to be dealt with --
18 MR. MABB: Uh-huh.
19 MR. FARRAR: -- to make sure that
20 we get it all, essentially, that we get those soils
21 which can continually contribute to ground water.
22 MR. MABB: Very good.
23 MR. FARRAR: So, it's -- it's
24 likely that it will be refined where the boundary is.
25 It -- essentially it would say the railroad tracks.

1 And if there are soils that -- that exceed the
2 concentration which -- we'll -- we'll allow for that.
3 MR. MABB: Which is fifty -- fifty
4 parts per hundred?
5 MR. FARRAR: No, it will be
6 something on the order of about ten parts --
7 MR. MABB: Oh.
8 MR. FARRAR: -- but that number's
9 going to be refined.
10 MR. MABB: Thank you.
11 MR. FARRAR: Comments, questions?
12 MR. KOMOROSKE: Any comments or
13 questions for the Health Department representatives?
14 MR. FARRAR: Remember you have
15 until May 27th. You can send them by e-mail, send us
16 a letter, you can call us on the phone. And if
17 you -- you can think of a question or a concern that
18 you have, you know, on the way home, geeze, I wish I
19 asked that question, feel free to call us tomorrow or
20 the next day, even the next week. Give us a call.
21 You have about another four weeks to get your
22 comments to us.
23 Okay. Jim, you have another
24 question?
25 MR. REGAN: I'll ask the last

1 question.
2 Will the tunnel be accessible for
3 maintenance during the operation?
4 MR. FARRAR: The -- the current
5 conceptual design of the F.S. allows for worker --
6 MR. REGAN: Okay.
7 MR. FARRAR: -- accessible flow.
8 It's possible that you'd have plumbing problems.
9 You'd have to deal with maintenance, things like
10 that. The tunnel itself will also yield ground
11 water. And there's going to have to be, you know,
12 ways to collect that, et cetera. There's going to
13 have to be a walkway through that water and --
14 whatever. The latest designs will be man-accessible
15 to the conceptual design.
16 MR. REGAN: Is that also in the
17 shelf, or are you going to have to --?
18 MR. FARRAR: That will be in the --
19 that will be in what we call the lower state of
20 the --
21 MR. LAPOINT: We -- we wanted a
22 rise in the depth right along top of the limestone.
23 MR. REGAN: The floor of the tunnel
24 should ride on top of that.
25 MR. FARRAR: Yeah, pretty close to

1 the limestone.
2 MR. REGAN: It -- it would be right
3 in contact with the shelf of the limestone?
4 MR. FARRAR: Yeah, just -- just
5 above it.
6 MR. REGAN: Okay.
7 MR. FARRAR: And the idea, Jim, is
8 to -- is to ensure that -- that the hydraulic
9 effectiveness of the tunnel is such that we get
10 various speed draw-down. Because the -- the idea for
11 getting the oil to run into the tunnel rather than
12 running to the river is make a hydraulic radiance so
13 steep that they will be into the drains or into the
14 tunnel, rather than migrating through the fractures
15 and get out. So --.
16 MR. REGAN: So, a highly efficient
17 capture of -- of the ground water?
18 MR. FARRAR: Exactly. It will be
19 not only the tunnel -- tunnels tend to be very
20 efficient watering systems. But with the vertical
21 drains as well, it will tremendously increase the
22 overall hydraulic efficiency, draining the liquids
23 into the tunnel.
24 It's going to yield a lot of water,
25 but we have to ensure that when the vertical drains

1 are put up they don't get into the river. That would
2 be -- that would be a problem. That would yield a
3 lot of water.
4 But we want to get up near the
5 river to ensure that the capture extends to very
6 close to the river, because there is P.C.B. oil in
7 the bedrock relatively close to the river, and some
8 of it might migrate into the river.
9 MR. REGAN: What -- what are you
10 talking about, just between the --
11 MR. FARRAR: Between --.
12 MR. REGAN: -- the top -- the top
13 of your riser well or --?
14 MR. FARRAR: That's -- that's
15 not -- the details has not -- has not been finalized.
16 MR. REGAN: Yeah, maybe --.
17 MR. FARRAR: We're not sure exactly
18 what the space is going to be between the tunnels
19 either. And we make sure that we do enough testing
20 during design implementation to make sure we've got
21 good communications to get that -- that -- capture
22 the -- the ground water and the oil.
23 Comments or questions? Anything
24 anybody doesn't understand, want me to go over
25 something again?

1 MR. KOMOROSKE: We're in no hurry,
2 I mean for the fair amount of time of this hearing --
3 plan and presentation.
4 Anybody like a copy of the plan --
5 the whole plan?
6 It's got a lot of attachments and a
7 lot of figures, and maybe -- submitted some more
8 questions.
9 MR. FARRAR: Yeah, if -- if you
10 were thinking about downloading it, you might as well
11 grab a copy. Some of the figures are fairly large
12 and they will take a long time to download.
13 (Off-the-record discussion)
14 MR. FARRAR: Anybody else need a
15 copy of the whole -- Sir?
16 There's -- there's also some copies
17 of the fact sheet, which is essentially a very
18 condensed version of the PRAP. But this also has
19 the -- the names and addresses of the people you can
20 contact if you have questions. It has my name and
21 address if you want to mail in comments.
22 (Off-the-record discussion)
23 MR. FARRAR: If there's no other
24 questions, thank you all for coming tonight. We're
25 going to be here for a little while if you think of

1 something, and you want to ask a question. If you
2 want to look at some of the drawings that show the --
3 the site or some of the soil samples, you're all free
4 to talk about that. And if you want to look at some
5 of the details that were -- you can do that to.
6 MR. KOMOROSKE: But if -- if you
7 want to make any formal comment for the record, now
8 is the time to do it, because once everybody gets up
9 and everything we're going to turn -- be turning the
10 tape off.
11 Going once, going twice. Thank
12 you.
13 (The hearing concluded at 8:00
14 p.m.)
15
16
17
18
19
20
21
22
23
24

1 I, Ray Schmidt, do hereby certify that the
2 foregoing was taken by me, in the cause, at the time
3 and place, as stated in the caption hereto, at Page 1
4 hereof; that the foregoing typewritten transcription,
5 consisting of pages number 1 to 22, inclusive, is a
6 true record prepared by me and completed by
7 Associated Reporters Int'l., Inc. from materials
8 provided by me.
9 Ray Schmidt
10 Ray Schmidt, Reporter
11 May 14, 2003 Date.
12
13 Tdsl/pkwb/030430rs(a)
14
15
16
17
18
19
20
21
22
23
24