Figure 1 - Site Location Map

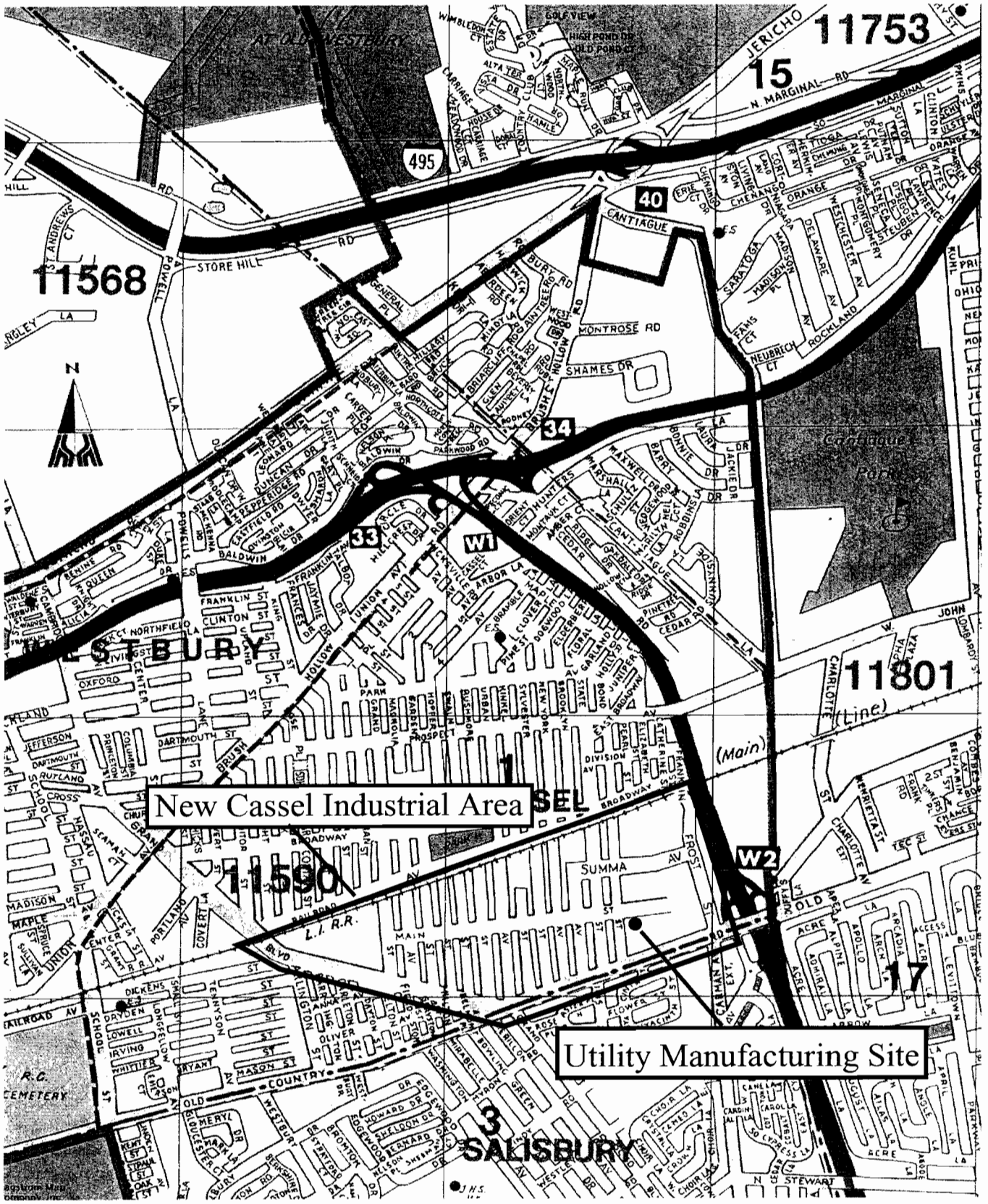

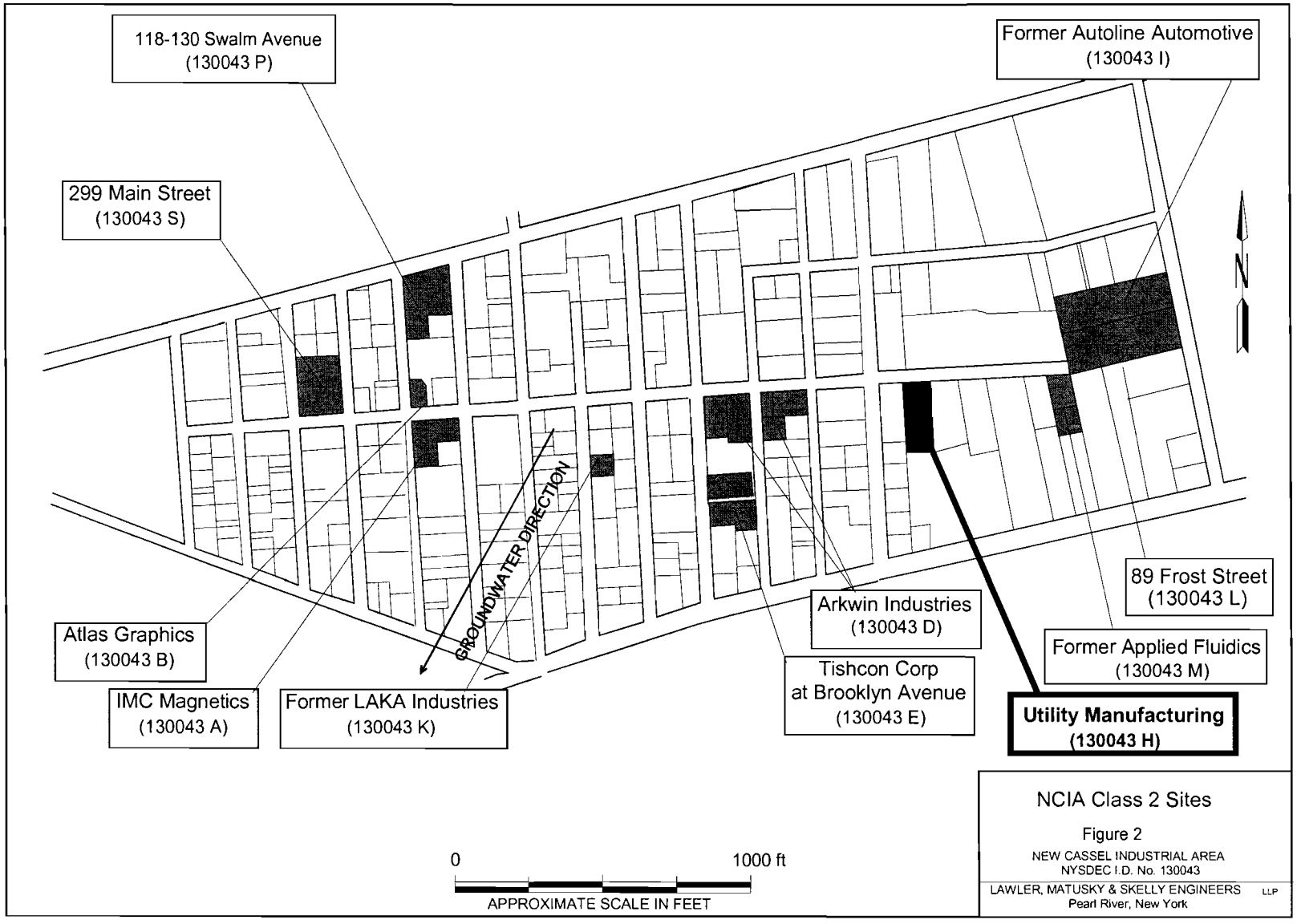

NCIA Class 2 Sites

Figure 2

NEW CASSEL INDUSTRIAL AREA
NYSDEC I.D. No. 130043

LAWLER, MATUSKY & SKELLY ENGINEERS LLP
Pearl River, New York

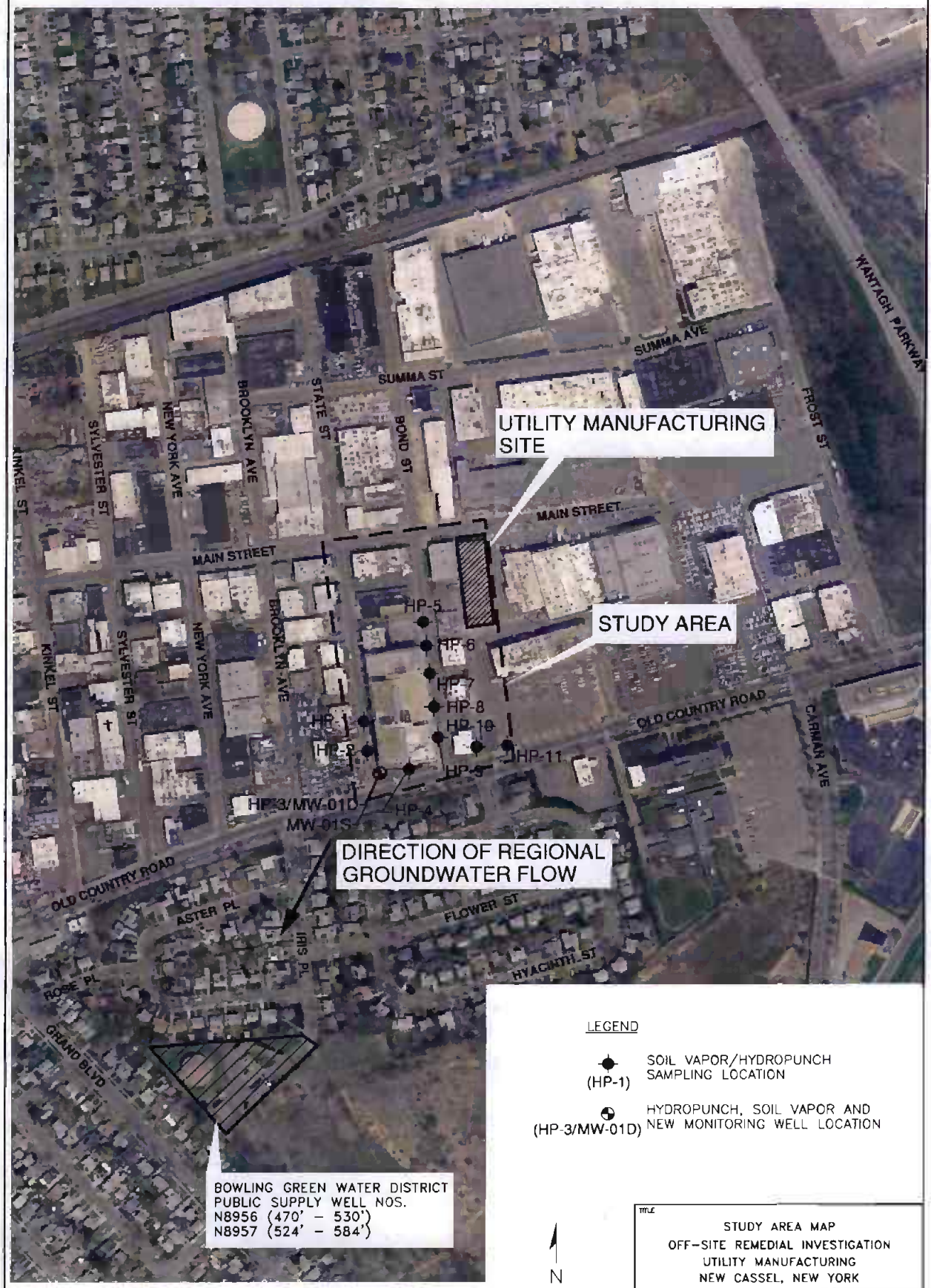

LEGEND

(HP-1) SOIL VAPOR/HYDROPUNCH SAMPLING LOCATION

(HP-3/MW-01D) HYDROPUNCH, SOIL VAPOR AND NEW MONITORING WELL LOCATION

TITLE

STUDY AREA MAP
OFF-SITE REMEDIAL INVESTIGATION
UTILITY MANUFACTURING
NEW CASSEL, NEW YORK

PREPARED FOR

NYSDEC SITE CODE No.1-30-043H

ERM Environmental Resources Management

SCALE: GRAPHIC

DATE: 12/19/0

FIGURE: 3

DRAWN: EMF

JOB NO.: 0020116

FILE NAME: 0020116-00-021

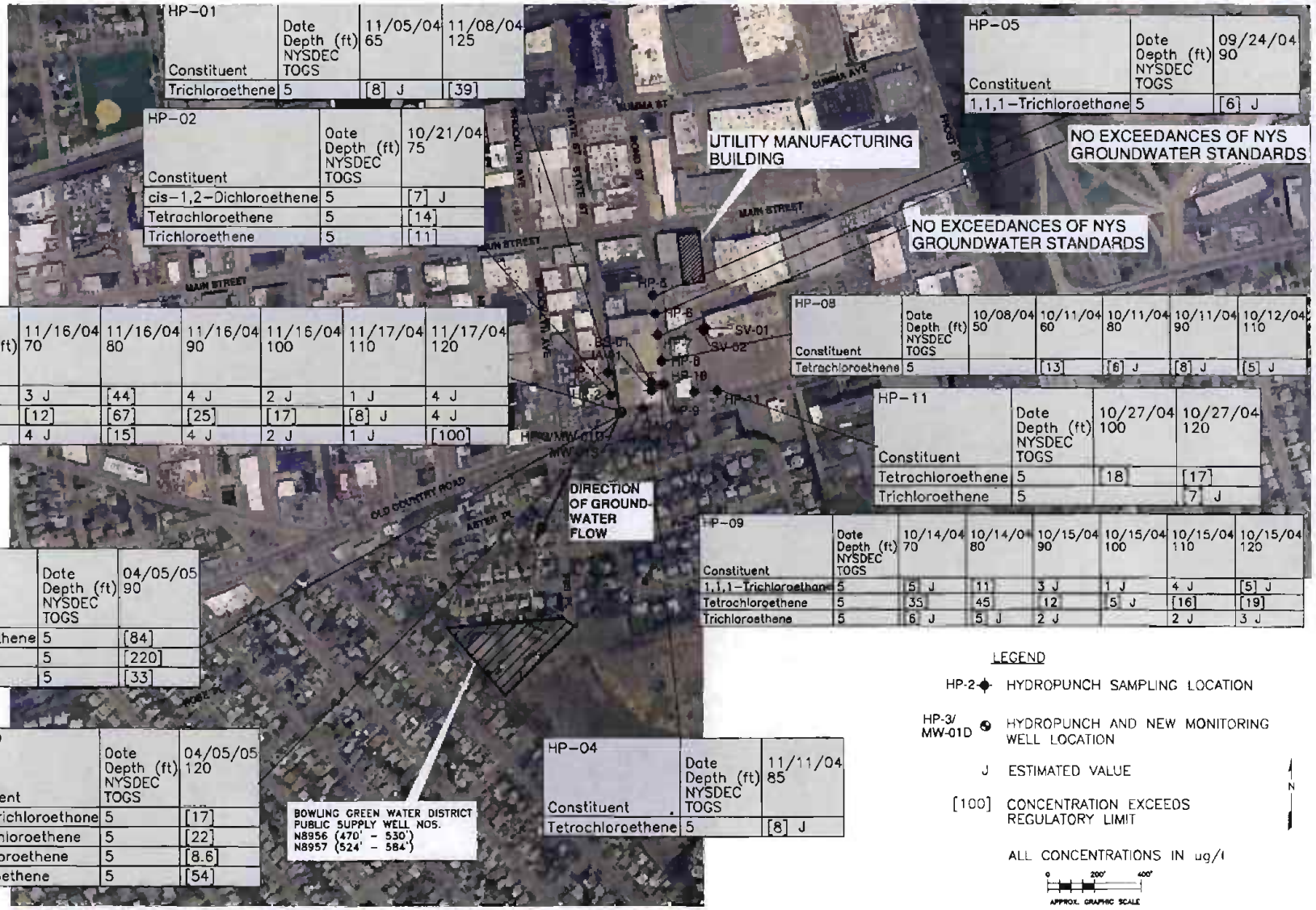

HP-01 Constituent	Date Depth (ft) NYSDEC TOGS	11/05/04 65	11/08/04 125
Trichloroethene	5	[8] J	[39]

HP-02 Constituent	Date Depth (ft) NYSDEC TOGS	10/21/04 75
cis-1,2-Dichloroethene	5	[7] J
Tetrachloroethene	5	[14]
Trichloroethene	5	[11]

HP-03 Constituent	Date Depth (ft) NYSDEC TOGS	11/16/04 70	11/16/04 80	11/16/04 90	11/16/04 100	11/17/04 110	11/17/04 120
cis-1,2-Dichloroethene	5	3 J	[44]	4 J	2 J	1 J	4 J
Tetrachloroethene	5	[12]	[67]	[25]	[17]	[8] J	4 J
Trichloroethene	5	4 J	[15]	4 J	2 J	1 J	[100]

MW-01S Constituent	Date Depth (ft) NYSDEC TOGS	04/05/05 90
cis-1,2-Dichloroethene	5	[84]
Tetrachloroethene	5	[220]
Trichloroethene	5	[33]

MW-01D Constituent	Date Depth (ft) NYSDEC TOGS	04/05/05 120
1,1,1-Trichloroethane	5	[17]
1,1-Dichloroethene	5	[22]
Tetrachloroethene	5	[8.6]
Trichloroethene	5	[54]

HP-04 Constituent	Date Depth (ft) NYSDEC TOGS	11/11/04 85
Tetrachloroethene	5	[8] J

HP-05 Constituent	Date Depth (ft) NYSDEC TOGS	09/24/04 90
1,1,1-Trichloroethane	5	[6] J

HP-08 Constituent	Date Depth (ft) NYSDEC TOGS	10/08/04 50	10/11/04 60	10/11/04 80	10/11/04 90	10/12/04 110
Tetrachloroethene	5		[13]	[6] J	[8] J	[5] J

HP-11 Constituent	Date Depth (ft) NYSDEC TOGS	10/27/04 100	10/27/04 120
Tetrachloroethene	5	[18]	[17]
Trichloroethene	5		[7] J

HP-09 Constituent	Date Depth (ft) NYSDEC TOGS	10/14/04 70	10/14/04 80	10/15/04 90	10/15/04 100	10/15/04 110	10/15/04 120
1,1,1-Trichloroethane	5	[5] J	[11]	3 J	1 J	4 J	[5] J
Tetrachloroethene	5	[35]	[45]	[12]	[5] J	[16]	[19]
Trichloroethene	5	[6] J	[5] J	2 J		2 J	3 J

LEGEND

HP-2 HYDROPUNCH SAMPLING LOCATION

HP-3/MW-01D HYDROPUNCH AND NEW MONITORING WELL LOCATION

J ESTIMATED VALUE

[100] CONCENTRATION EXCEEDS REGULATORY LIMIT

ALL CONCENTRATIONS IN ug/l

0 200' 400'
APPROX. GRAPHIC SCALE

N

NYSDEC SITE CODE No. 1-30-043H

ERM Environmental Resources Management

GROUNDWATER SAMPLING RESULTS

4

EFR/EMF 12/19/05

GRAPHIC 0020118 0020118-00-022

LEGEND

⊙ EXISTING MONITORING WELL LOCATION

◐ NEW NESTED MONITORING WELL LOCATION

N

0 300' 600'

APPROX. GRAPHIC SCALE

TITLE

LOCATIONS OF MONITORING WELLS

PREPARED FOR

NYSDEC SITE CODE No.1-30-043H

ERM

DRAWN EMF	JOB NO. 0020117	FILE NAME 0020117-00-001.fm	SCALE GRAPHIC
			DATE 2/1/05

FIGURE 5

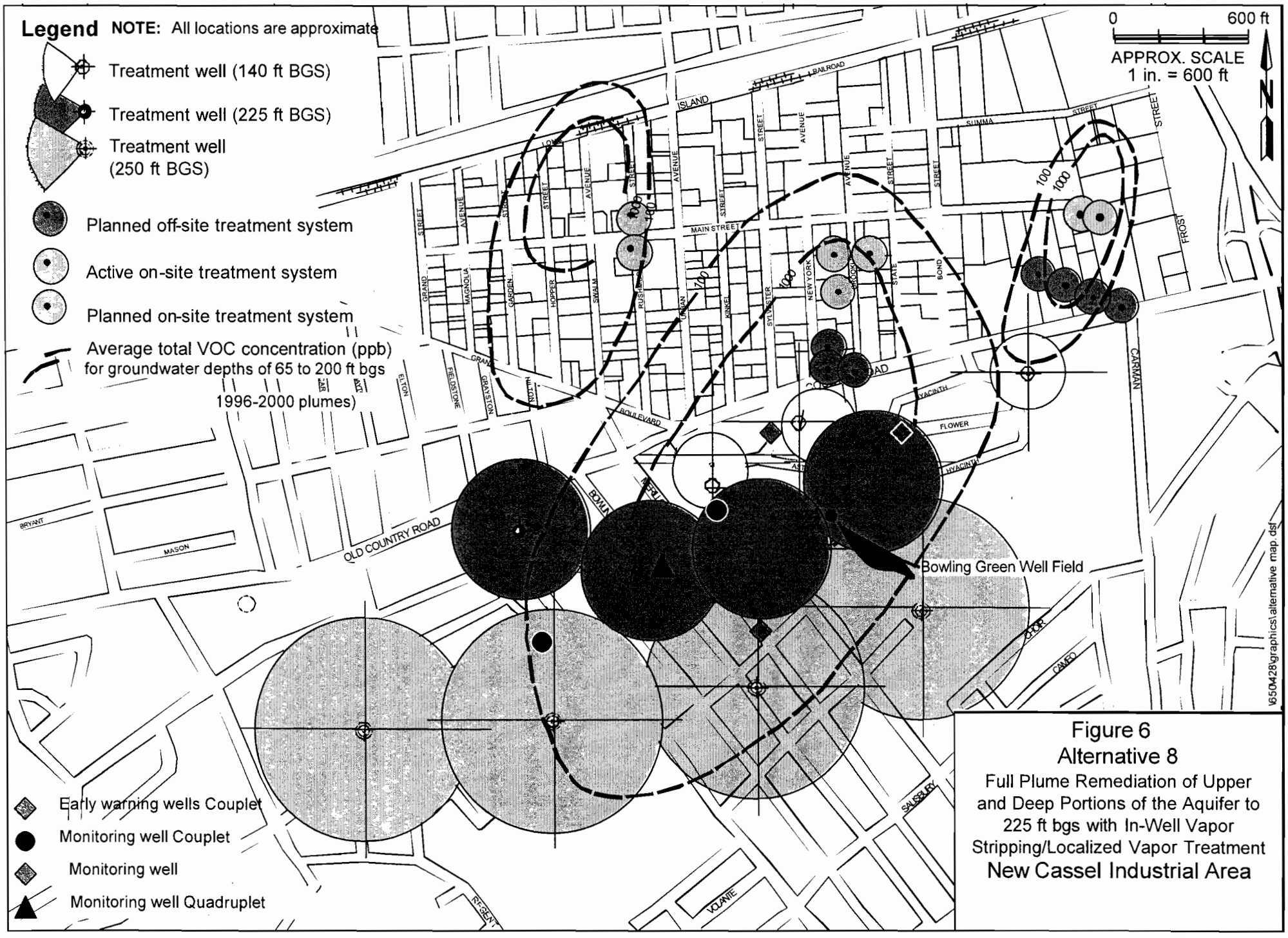

Figure 6
Alternative 8
Full Plume Remediation of Upper and Deep Portions of the Aquifer to 225 ft bgs with In-Well Vapor Stripping/Localized Vapor Treatment
New Cassel Industrial Area

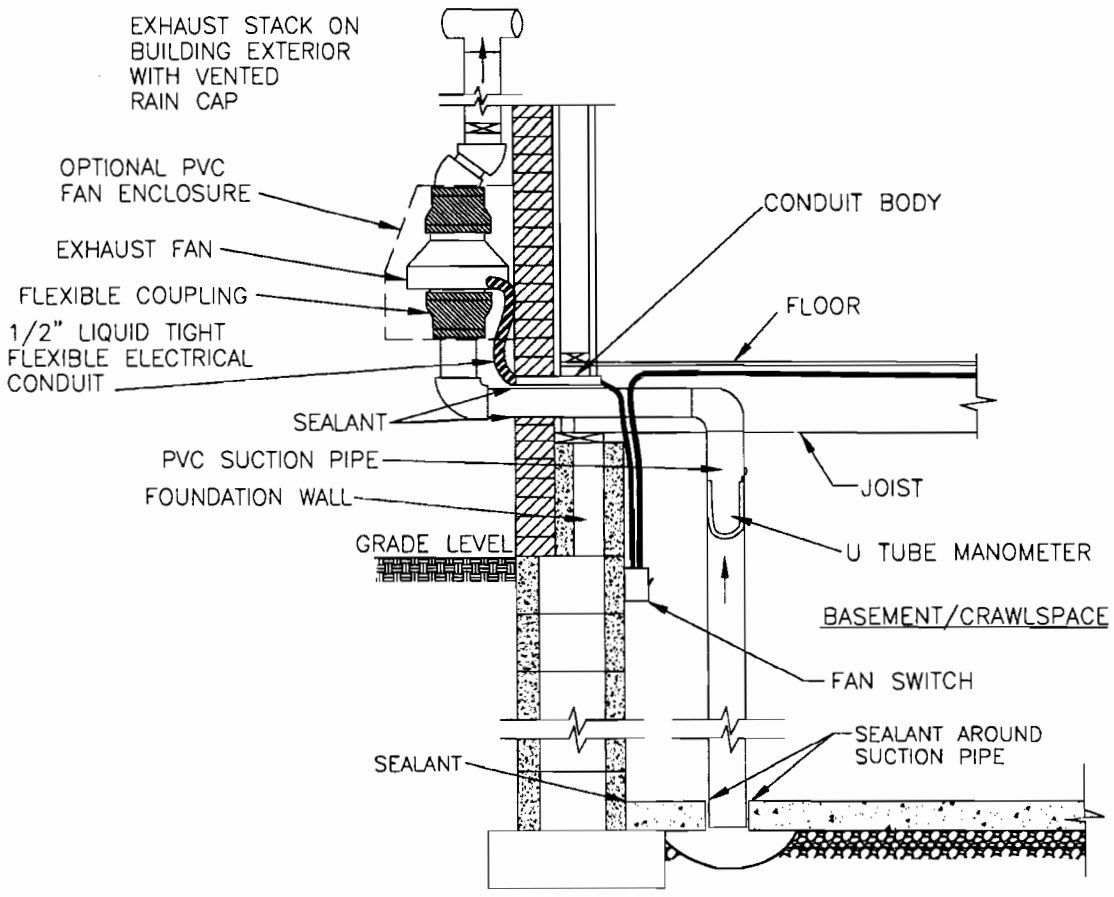

TYPICAL SECTION
NOT TO SCALE

SOURCE: NYSDOH VI PRESENTATION

TITLE
SCHEMATIC OF THE SUBSLAB DEPRESSURIZATION SYSTEM

PREPARED FOR
NYSDEC SITE CODE NO. 1-30-043H

ERM Environmental Resources Management			SCALE NTS	FIGURE 7
DRAWN: EMF	JOB NO.: 0020117	FILE NAME: 0020117-00-002bw	DATE 1/1/06	

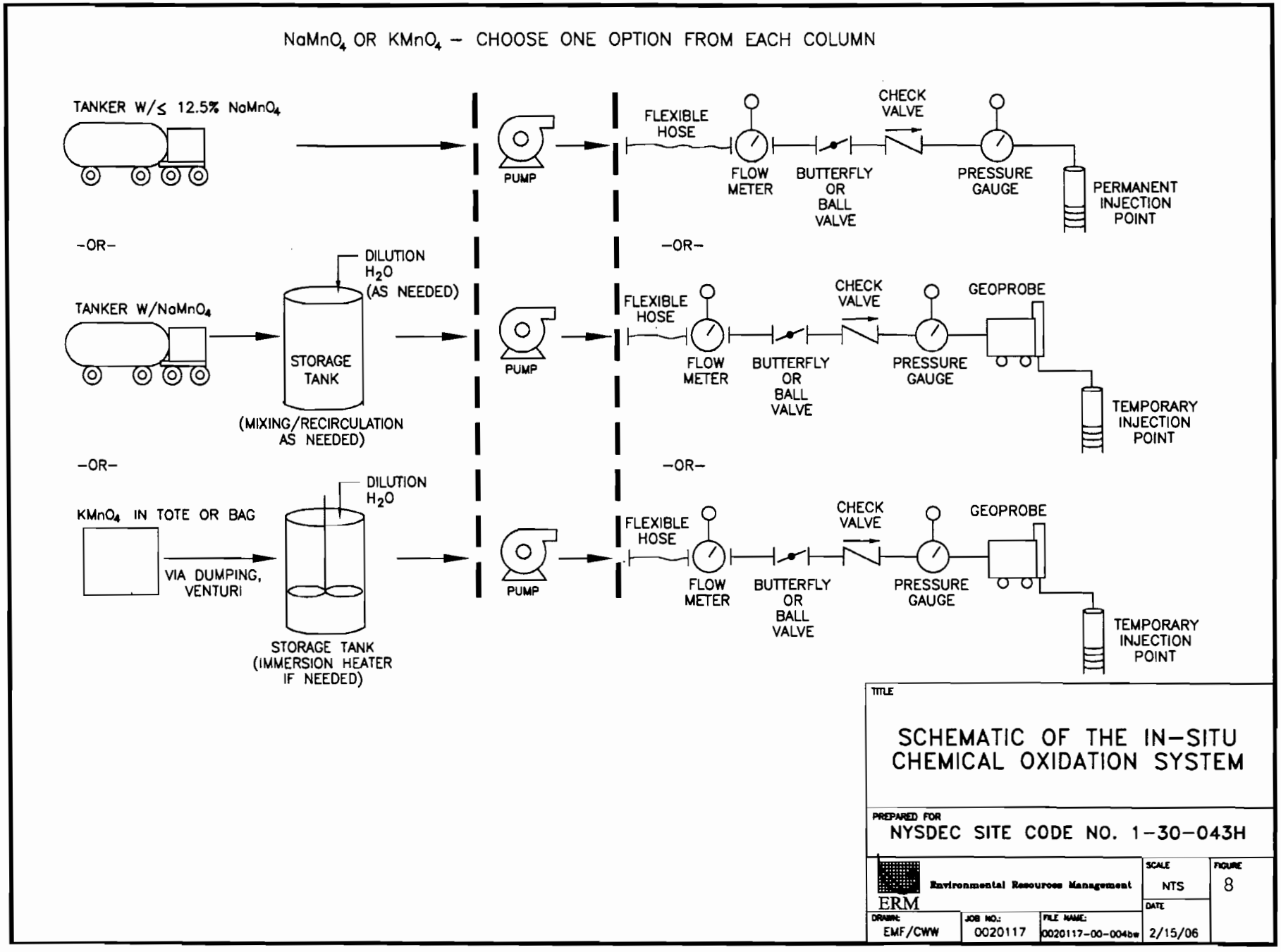
NaMnO4 OR KMnO4 – CHOOSE ONE OPTION FROM EACH COLUMN
TANKER W/≤ 12.5% NaMnO4
-OR-
TANKER W/NaMnO4
DILUTION H2O (AS NEEDED)
STORAGE TANK
(MIXING/RECIRCULATION AS NEEDED)
-OR-
KMnO4 IN TOTE OR BAG
VIA DUMPING, VENTURI
DILUTION H2O
STORAGE TANK (IMMERSION HEATER IF NEEDED)
PUMP
PUMP
PUMP
FLEXIBLE HOSE
FLOW METER
BUTTERFLY OR BALL VALVE
CHECK VALVE
PRESSURE GAUGE
PERMANENT INJECTION POINT
-OR-
FLEXIBLE HOSE
FLOW METER
BUTTERFLY OR BALL VALVE
CHECK VALVE
PRESSURE GAUGE
GEOPROBE
TEMPORARY INJECTION POINT
-OR-
FLEXIBLE HOSE
FLOW METER
BUTTERFLY OR BALL VALVE
CHECK VALVE
PRESSURE GAUGE
GEOPROBE
TEMPORARY INJECTION POINT
TITLE
SCHEMATIC OF THE IN-SITU CHEMICAL OXIDATION SYSTEM
PREPARED FOR
NYSDEC SITE CODE NO. 1-30-043H
ERM
Environmental Resources Management
SCALE
NTS
FIGURE
8
DATE
2/15/06
DRAWN:
EMF/CWW
JOB NO.:
0020117
FILE NAME:
0020117-00-004bw

LOCATIONS OF PROPOSED
ISCO INJECTION POINTS
UTILITY MANUFACTURING
700-712 MAIN STREET
NEW CASSEL, NEW YORK

NYSDEC SITE CODE No.1-30-043H

ERM

GRAPHIC

EMF

1/11/06

LEGEND

SVE POINTS

AS POINTS

0 40' 80'

APPROX. GRAPHIC SCALE

N

LOCATIONS OF PROPOSED
AIR SPARGING POINTS AND
SVE COLLECTION AREAS
700-712 MAIN STREET
NEW CASSEL, NEW YORK

PREPARED FOR
NYSDEC SITE CODE No. 1-30-043H

ERM

10

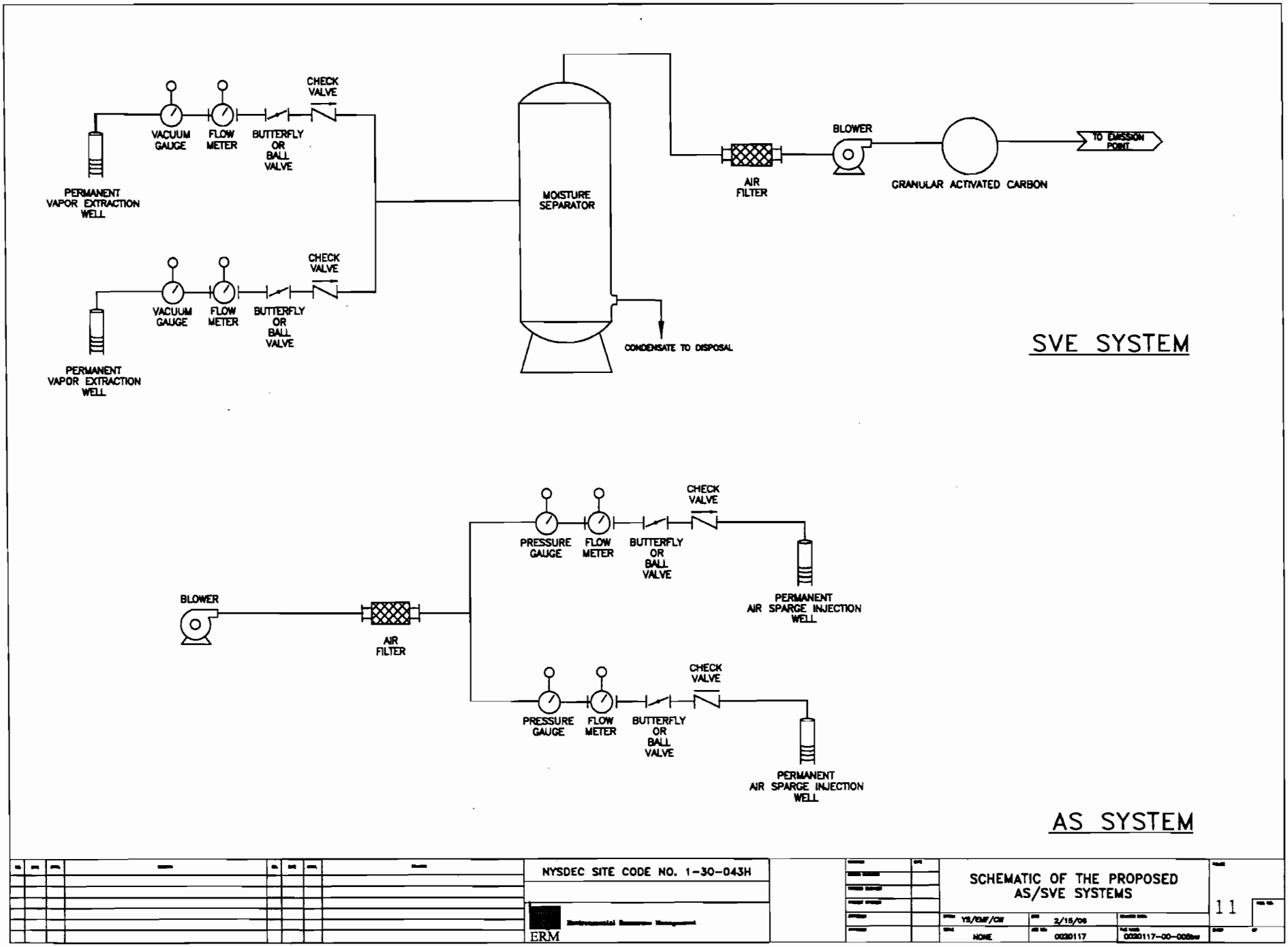
CHECK VALVE
VACUUM GAUGE
FLOW METER
BUTTERFLY OR BALL VALVE
PERMANENT VAPOR EXTRACTION WELL
CHECK VALVE
VACUUM GAUGE
FLOW METER
BUTTERFLY OR BALL VALVE
PERMANENT VAPOR EXTRACTION WELL
MOISTURE SEPARATOR
CONDENSATE TO DISPOSAL
AIR FILTER
BLOWER
GRANULAR ACTIVATED CARBON
TO EMISSION POINT
SVE SYSTEM
BLOWER
AIR FILTER
PRESSURE GAUGE
FLOW METER
BUTTERFLY OR BALL VALVE
CHECK VALVE
PERMANENT AIR SPARGE INJECTION WELL
PRESSURE GAUGE
FLOW METER
BUTTERFLY OR BALL VALVE
CHECK VALVE
PERMANENT AIR SPARGE INJECTION WELL
AS SYSTEM
NYSDEC SITE CODE NO. 1-30-043H
ERM
SCHEMATIC OF THE PROPOSED AS/SVE SYSTEMS
YS/EMF/CW
2/15/06
NONE
0020117
0020117-00-006bw
11

APPENDIX A

Responsiveness Summary

RESPONSIVENESS SUMMARY

Utility Manufacturing/Wonder King Site
Operable Unit No. 2
Town of North Hempstead, Nassau County, New York
Site No. 130043H

The Proposed Remedial Action Plan (PRAP) for the Utility Manufacturing/Wonder King site, was prepared by the New York State Department of Environmental Conservation (the Department) in consultation with the New York State Department of Health (NYSDOH) and was issued to the document repositories on February 22, 2008. The PRAP outlined the remedial measure proposed for the contaminated groundwater and soil vapor at the Utility Manufacturing/Wonder King (Utility) site.

The release of the PRAP was announced by sending a notice to the public contact list, informing the public of the opportunity to comment on the proposed remedy.

A public meeting was held on March 4, 2008, which included a presentation of the Remedial Investigation (RI) and the Feasibility Study (FS) as well as a discussion of the proposed remedy. The meeting provided an opportunity for citizens to discuss their concerns, ask questions and comment on the proposed remedy. These comments have become part of the Administrative Record for this site. The public comment period for the PRAP ended on March 21, 2008.

This responsiveness summary responds to all questions and comments raised during the public comment period. The following are the comments received, with the Department's responses:

COMMENT 1: I live on Brooklyn Avenue near Prospect Avenue. Are the residents in my neighborhood exposed to contamination from this site? What are the potential impacts to our health? What exams should we have done?

RESPONSE 1: Prospect Avenue is located upgradient of the site and is not affected by site-related contamination.

COMMENT 2: Are homes being affected by site-related contamination?

RESPONSE 2: Homes to the north of the New Cassel Industrial Area (NCIA) are not affected by either groundwater or soil vapor contamination associated with the Utility Manufacturing site or with the NCIA in general. Groundwater located south of the NCIA is impacted with site-related contaminants and is flowing under homes. No resident is expected to be consuming this contaminated groundwater since drinking water for the area comes from the Bowling Green public water supply and is treated for volatile organic compound contamination prior to water distribution to area residents.

COMMENT 3: Do owners of buildings with vapor intrusion issues have to notify tenants and/or employees about the findings of vapor intrusion investigations? It seems that New York State has decided to protect property owners instead of the public or employee health.

RESPONSE 3: The State provides information to the owners of the buildings sampled and strongly encourages the owners to communicate with the tenants and/or appropriate employees.

COMMENT 4: I work in the Century 21 building. Has this building been checked for indoor air contamination?

RESPONSE 4: The Century 21 building is located on the Former Applied Fluidics site (Site Number 130043M). Vapor intrusion sampling was conducted in the building and no indoor air contamination was detected.

COMMENT 5: Why did you wait until after installing the air sparge/soil vapor extraction system to sample beneath the Century 21 building? Was there an issue with indoor air prior to the installation of the soil vapor extraction system in Century 21?

RESPONSE 5: The air sparge/soil vapor extraction system was originally installed to remediate contaminated groundwater at the Former Applied Fluidics site (Site Number 130043M). The system provides protection against soil vapor intrusion as an added benefit. The indoor air at the Century 21 building was sampled to evaluate the indoor air quality after the soil vapor extraction system was installed to ensure it was not adversely impacted.

COMMENT 6: Can you tell us which off-site buildings will be mitigated for vapor intrusion?

RESPONSE 6: The Department is keeping the building locations confidential to protect the privacy of the property owners.

COMMENT 7: If there is no problem in the affected buildings, why are people not being told which buildings are affected so we can make our own judgments on whether we want to be exposed to that area?

RESPONSE 7: We try to protect confidentiality of all private property, and strongly encourage communication with tenants and employers when there are exposures.

COMMENT 8: The DEC discovered homes impacted with soil vapor intrusion in the 1990s. The DEC has known about vapor intrusion for 10 to 12 years already.

RESPONSE 8: Improvements in analytical techniques and knowledge gained from site investigations in New York and other states has recently led to an increased awareness of soil vapor as a medium of concern and of the potential for exposures from the soil vapor intrusion pathway. Based on this additional information, New York is currently re-evaluating previous assumptions and

decisions regarding the potential for soil vapor intrusion exposures at sites. As a result, all past, current, and future contaminated sites will be evaluated to determine whether these sites have the potential for exposures related to soil vapor intrusion. Consequently, the Department is currently conducting a vapor intrusion investigation for the homes located south of Old Country Road.

COMMENT 9: If the owner of a property with a soil vapor intrusion problem sells the property, does he/she have to notify the buyer?

RESPONSE 9: Should such an owner decide to transfer ownership of the property in the future, the Department believes that the Real Property Disclosure Act, which went into effect on March 1, 2002, requires that the potential purchaser of the structure be informed of the results of the environmental sampling that was performed.

COMMENT 10: I recently purchased a home in the area. I believe that buyers should be notified about vapor intrusion problems.

RESPONSE 10: See Response Number 9.

COMMENT 11: Why did you stop remediating the on-site groundwater when PCE levels were at 26 parts per billion (ppb)? Isn't the groundwater standard 5 ppb for PCE?

RESPONSE 11: The Department ceased operation of the on-site remediation system when the limits of the remediation technology were reached. The Department also determined that the remaining contamination could not be cost-effectively treated using existing technologies. See also Response Number 2.

COMMENT 12: What is the difference between the groundwater remediation technology in remedial alternative one, "no action," and natural attenuation?

RESPONSE 12: Natural attenuation involves stricter monitoring than no action. However, neither remedy involves active groundwater remediation.

COMMENT 13: What contaminant levels are entering the Bowling Green public water supply?

RESPONSE 13: The Town of Hempstead Water Department regularly samples the raw and treated water at the Bowling Green public water supply. Please contact that department for the most up to date results.

COMMENT 14: The groundwater has moved off-site, south of Old Country Road and impacted the Bowling Green drinking water wells. Eventually these wells may be overburdened by the contamination impacting them. Shouldn't either the property owner or the DEC pay for the treatment of the drinking water, not the water district?

RESPONSE 14: The Department provided the funding for the treatment system on the Bowling Green drinking water wells. The Department is currently suing the responsible parties of the New Cassel Industrial Area sites to recover the cost of the treatment system.

COMMENT 15: Do you have the results of what we are actually getting following the treatment at the Bowling Green Wells?

RESPONSE 15: In order to distribute drinking water to the public, public water supplies must meet drinking water standards. The treated water at the Bowling Green public water supply meets drinking water standards. Updated sampling results can be obtained from the Town of Hempstead Water Department.

COMMENT 16: How far has the plume traveled south of Old Country Road?

RESPONSE 16: This ROD only addresses off-site contamination north of Old Country Road. The Department previously conducted an investigation south of Old Country Road for all of the New Cassel Industrial Area sites. The results of the investigation, which delineated the groundwater south of Old Country Road, can be found in the document entitled, "Record of Decision, New Cassel Industrial Area Sites, Off-site Groundwater South of the New Cassel Industrial Area, Operable Unit 3", dated October 2003, which is available at the document repository.

COMMENT 17: When will the remedy for operable unit 3 be implemented?

RESPONSE 17: The Department estimates that construction of the operable unit 3 remedy will begin in approximately two years.

COMMENT 18: You have not sunk one well south of Old Country Road to determine how far the plume has gone. There is no information about this site south of Old Country Road. Current monitoring wells are in line to monitor contamination from sites that are west of Utility Manufacturing, but there are no wells far enough east to measure the amount of contamination coming from this specific site. You are doing things backwards. You should address the plume first and then remediate the sources instead of the other way around.

RESPONSE 18: The Department has conducted a comprehensive investigation of the groundwater contamination south of Old Country Road and has selected a remedy for that contamination. The details of the investigation and the selected remedy can be found in the document entitled, "Record of Decision, New Cassel Industrial Area Sites, Off-site Groundwater South of the New Cassel Industrial Area, Operable Unit 3", dated October 2003, which is available at the document repository.

COMMENT 19: What is the total amount of contamination coming from all the area's known sites?

RESPONSE 19: The Department has not calculated a total contaminant mass for all of the New Cassel Industrial Area sites. This would be very difficult to estimate and is not needed to select remedies to clean up the sites.

COMMENT 20: When does the public comment period end?

RESPONSE 20: The public comment period for this PRAP ends on March 21, 2008.

COMMENT 21: This is the first time I have heard about this contamination. Why did I receive no previous notification?

RESPONSE 21: The Department strives to ensure adequate citizen participation in its remedial program. We have held numerous meetings on the New Cassel Industrial Area sites over the last several years. We send out fact sheets for each public meeting and update the public mailing list for each meeting.

COMMENT 22: There are known areas upgradient of Utility Manufacturing that used and improperly release chlorinated solvents into the environment which may be impacting or creating the plume attributed to the Utility Manufacturing site. This information has been supplied to the DEC. Will this issue be addressed in the ROD?

RESPONSE 22: Prior to on-site remediation, the groundwater contaminant levels on the site and downgradient of the site exceeded concentrations on the upgradient end of the site. Therefore, the on-site investigation demonstrated that the Utility Manufacturing/Wonder King site is responsible for the on-site and downgradient plume.

COMMENT 23: On slide number 16, it shows that the DEC has drilled numerous wells that detected elevated levels of volatile organic compounds (VOCs). There appears to be a gap of detection of VOCs in the data. How do you explain the gap?

RESPONSE 23: The Department detected VOC levels exceeding groundwater standards at several locations in the off-site study area. Therefore, the Department does not believe there is a gap in detections.

COMMENT 24: In the selected alternative, you have proposed adding three monitoring wells south of Old Country Road in OU-3. These wells would be ineffective due to the fact that there is a remedy for OU-3. These wells would not give proper readings of what is occurring in OU-2 due to the implementation of the OU-3 remedy. This does not add to the protection of human health or the environment, and it is not cost effective.

RESPONSE 24: In order to monitor the progress of the natural attenuation, groundwater monitoring wells downgradient of the study area are needed. The Department will coordinate the Utility Manufacturing/Wonder King Site OU2 remedy with the New Cassel Industrial Area Sites, Off-site Groundwater South of the New Cassel Industrial Area OU3 remedy.

Mr. Eric Weinstock of C.A Rich Consultants, the property owner's consultant, submitted a letter (dated March 20, 2008), which includes comments on the PRAP and other site-related documents. The Responsiveness Summary addresses Mr. Weinstock's comments on the PRAP and other comments that are relevant to the PRAP.

Mr. Weinstock's letter contains several comments on the design elements of the remedial alternatives in the Feasibility Study Report. As the selected remedy will be designed after the ROD is issued, these comments are premature as the design elements have not been finalized and it is not know whether these will apply at that time.

Mr. Weinstock's comments include:

COMMENT 25: The public comment period began on February 22, 2008, however, we were not provided a copy of the October 2007 Supplemental Remedial Investigation Report – a critical document used in the development of the PRAP – until March 10, 2008. Furthermore, the copy of the October 2007 Supplemental Remedial Investigation Report that we received is missing a key figure which identifies the locations of the eight properties that were investigated. As such, we believe that it is unfair to begin the public comment period until this crucial piece of information – which was developed using public funds – is made available.

RESPONSE 25: The Supplemental Remedial Investigation Report was available in the document repositories for the entire comment period. The report does not identify the locations of the buildings sampled for vapor intrusion to protect the privacy of the off-site property owners.

COMMENT 26: Based on records from the NCDH, there were several former businesses located on Old Country Road and on Bond Street between Utility and Old Country Road that used chlorinated solvents and were serviced by on-site cesspools. The 1995 Site Investigation Report prepared by the NYSDEC identified tenants at 44, 45 and 50 Bond Street that used and disposed of chlorinated solvents prior to the building being connected to public sewers. These include, but are not limited to: 1,1,1-TCA; TCE; benzene; lacquer thinner; mineral spirits; an unknown trade name chemical; petroleum distillates; naphtha; various oils; and kerosene. Some of the former occupants of these addresses were Supreme Edgelight, Precision Mechanisms, Motorworks, and All-Tronics. Building number 1025 Old Country Road is also listed as having housed Cadillac, Dodge and Nissan auto dealerships which may have performed vehicle maintenance at this location. It is also believed that prior to being connected to sewers, 1025 Old Country Road housed the tenant "Scappy Auto Body". There are clearly numerous other potential sources of VOCs that have not been addressed in the PRAP. As these buildings were 1) serviced by septic systems prior to the installation of public sewers in the 1980's and 2) housed tenants that used solvents, it is reasonable to assume these structures are likely sources of the VOC contamination to the underlying soil and groundwater. However, the NYSDEC has continually overlooked these findings and has alleged that Utility is the only source of VOCs in the soil vapor and groundwater below Bond Street. How will this information be incorporated into the finial [sic] Remedy?

RESPONSE 26: The Department has conducted several Preliminary Site Assessments for the New Cassel Industrial Area. To date, the Department has not listed any of the properties between the site and Old Country Road on the Registry of Inactive Hazardous Waste Disposal Sites (Registry). As this ROD addresses the off-site contamination from the Utility site, the Department will not expand the scope of this ROD to include other properties.

COMMENT 27: The Remedial Investigation indicated that the source of approximately 70% of the compounds detected in the soil vapor samples is unknown. The cesspools from the former tenants along Old Country Road and Bond Street are a possible source of this contamination that has not been investigated. If there are no other local sources of VOCs (such as former cesspools or spills), what is the "unknown source" of these compounds? How will this information be incorporated into the finial [sic] Remedy?

RESPONSE 27: The purpose of the off-site remedial investigation was to determine the extent of contamination originating at the Utility site. The remedial investigation delineated this contamination and the Department incorporated the results of the investigation into the PRAP and ROD.

COMMENT 28: The geoprobe groundwater samples collected during the Remedial Investigation displayed a "gap" of VOCs in the groundwater between Utility and wells MW-1S and 1D. Hydropunch samples HP-5, 6, 7,and 8 displayed very low to no detections of VOCs. This information was presented on Figure 4 of the PRAP. Based on an evaluation of the data on Figure 4, it is possible that the VOCs detected in wells MW-1S and 1D originate from a local source, such as the former cesspools mentioned in comment number 1. Will an evaluation of this be incorporated into the final Remedy?

RESPONSE 28: Volatile organic compounds were detected in eight of ten off-site groundwater sampling locations at levels exceeding New York State groundwater standards. Therefore, the data does not indicate a gap in VOC detections.

COMMENT 29: There are known releases of chlorinated solvents in the groundwater upgradient of the Utility property. The PRAP does not mention these sites or the possibility that slugs of contaminated groundwater may have migrated from these upgradient sources and beneath the Utility property towards Old Country Road. How will this information be incorporated into the finial [sic] Remedy?

RESPONSE 29: The comment letter does not provide any information about the alleged releases or upgradient sources. Therefore, the Department cannot alter the proposed remedy based on this comment.

COMMENT 30: The selected alternative includes the installation of three new pairs of monitoring wells south of Old Country Road for natural attenuation monitoring purposes. However, these wells will be located in the portion of the aquifer that will be remediated by the in-well vapor stripping wells required under OU-3. As such, the addition of these wells does not provide any additional

protection to human health or the environment and are not a cost-effective component of the final remedy. The NYSDEC should develop a fifth Alternative that includes long-term monitoring of the existing monitoring wells without the installation of new wells in the area that will be addressed by the OU-3 remediation system. Will this Alternative be incorporated into the ROD?

RESPONSE 30: See Response Number 24.

COMMENT 31: In the introduction section, the SRI [Supplemental Remedial Investigation] Report states that "the facility [Utility] uses over 20,000 pounds of PCE per year." This statement is untrue. Utility does not, and never has used PCE.

RESPONSE 31: As stated in Section 3.1 of this ROD, Utility Manufacturing is an active facility that blends and repackages materials, including tetrachloroethene (PCE). This company has operated since 1976 and processes several thousand pounds of PCE each year. For example, Utility's annual PCE purchases from 1990-1994 ranged from 23,600-45,760 pounds. Utility stated in a December 26, 2002 letter that they repackage approximately 4,000 pounds of PCE each year. In 1971, two 550-gallon above ground storage tanks were installed inside the building. Utility has stored PCE in these tanks since occupying the facility.

COMMENT 32: The SRI states that Utility Manufacturing refused to perform this work [the off-site investigation] in accordance with the NYSDEC's requirements. The SRI, however, should include that Utility was willing to conduct an off-site investigation with a scope of work that would take into account the former septic systems of previous industrial and commercial tenants along Bond Street and Old Country Road.

RESPONSE 32: Before conducting the off-site investigation using State Superfund money, the Department gave the PRPs the opportunity to conduct the off-site investigation between the site and Old Country Road. No agreement between the PRPs and the State was reached, consequently, the State proceeded with the work.

COMMENT 33: The SRI Report states that a pre-sampling building survey was performed in accordance with NYSDOH Guidance (NYSDOH, 2006) that included identification of chemical usage. However, there is no log of the chemicals stored or used in any of the eight buildings that were tested. The chemical storage inventory logs for all eight properties should be provided. In fact, the SRI Report states that at property 2 the NYSDEC contractor "was denied access to the product inventory or chemical usage inside the building." However, the NYSDEC is recommending that a sub-slab depressurization (SSD) system be installed presumably because acetone was detected in the indoor air. Perhaps the tenant is storing acetone in the building. If this is the case, the SSD system would not be necessary. This issue should be resolved before funds are expended on a system that may have no effect on the acetone concentrations in the building.

RESPONSE 33: As shown in Table 2 of the ROD, the Department has chosen to mitigate property 2 based on TCE levels in the subslab vapor and indoor air.

COMMENT 34: The report states that high levels of PCE (1,607 ug/m3) and acetone (6,047 ug/m3) were detected in building 11. The PRAP states that this is an active auto paint shop. As spray guns used to paint cars produce VOC vapors, it is possible that the vapors from this property are migrating to neighboring buildings. A property location map must be provided before a proper evaluation of this report can be completed.

The report states that several buildings had indoor air VOC concentrations comparable to the outdoor air VOC readings. This was the case at properties 1, 2, 3, 7 and 13. As such, the indoor air readings may be an indication of the overall air quality in New Cassel and not be reflective of soil vapor intrusion. A sample location map is needed to adequately evaluate the data.

RESPONSE 34: The vapor intrusion data was evaluated using the NYSDOH soil vapor intrusion guidance. Recommendations in the report are based upon that guidance.

COMMENT 35: The post remediation monitoring reports performed on behalf of Utility indicate that the significant on-site threats have already been eliminated or mitigated by the IRM. Based on the information available to date, it is unclear whether the contamination detected off-site originated from the Utility site or from local sources below the Bond Street and 1025 Old Country Road properties.

RESPONSE 35: Although Utility Manufacturing conducted investigation and remediation activities on the site, they did not conduct an off-site investigation or remediation. The state-funded RI/FS indicated that volatile organic compounds have migrated from the site through the groundwater and soil vapor and are affecting off-site properties.

COMMENT 36: The Remedial Action Objectives for Groundwater stated in the FS Report are listed below:

- *Prevent exposure to contaminated groundwater, above acceptable risk levels;*
- *Prevent or minimize further migration of the contaminant plume; and*
- *Return groundwaters to their expected beneficial uses wherever practicable.*

These issues have already been addressed by the OU-3 ROD.

RESPONSE 36: The selected remedy meets the goals presented in the FS Report and the ROD for this site. The Record of Decision for the New Cassel Industrial Area Sites, Off-site Groundwater South of the New Cassel Industrial Area, Operable Unit 3, contains remedial goals for that remedy.

COMMENT 37: The RI Report states that the source of the nine VOCs found both in the soil vapor samples and the groundwater samples collected from beneath the Study Area is likely groundwater. The source of the other 21 VOCs detected in the soil vapor sample are presently unknown. The fact that approximately 70% of the compounds detected in the soil vapor samples below the study area were not detected in the groundwater below the Utility site indicates that there are other local sources of VOCs between Utility and Old Country Road. Likely source areas would include the

former cesspools mentioned above. The compounds carbon disulfide, chloroform, dichlorodifluromethane, Freon 113, isooctane, n-heptane, n-hexane and trichlorofluoromethane were detected in the soil vapor samples. However, Utility has not used these substances at their facility and they were not detected in any of the samples collected from the Site.

RESPONSE 37: The recommendations for remediation were based upon the levels of site-related contaminants in the groundwater, soil vapor, indoor air and outdoor air.

Audie Kranz of Utility submitted a letter (dated March 17, 2008) which included the following comments:

COMMENT 38: The PRAP mischaracterizes the events in 2002, as detailed on the bottom of page 5. Utility offered to do this work according to a plan that would be limited to what would be downgradient of the Site. Instead NYSDEC insisted with work that was far beyond that in scope. Even though Utility had and will continue to be cooperative, this was far beyond what could be reasonably expected of Utility.

RESPONSE 38: See Response 32.

COMMENT 39: The biggest criticism we have is that the PRAP does not reflect the fact that the contamination did not come from the Utility Manufacturing/Wonder King site. The reasons for this conclusion are outlined below:

1. In 1988, there was contamination found in the drainage structures at the Site. The soil above the ground water and beneath the drainage structures was confirmed to have met regulatory standards. Therefore this contamination did not contribute to ground water contamination. These structures were voluntarily remediated.

2. Although Utility Manufacturing has bought and resold, but never used, some of the chemicals found in the ground water, no sources at the site have ever been found as a source of the contamination.

3. Although the groundwater in the New Cassel Industrial Area (NCIA) generally flows in a southwesterly direction, however there are known exceptions to the rule, and studies around the Site have shown otherwise. Anson well MW-9, located a few hundred feet south of the Site and between the site and the off-site area, has shown that there is a mounding or eddy or perched water at that point. Further tests have shown that there are clay lenses throughout the area below the southern half of the Site. It is naïve and simplistic to think the ground below this area is completely homogenous. These natural structures do affect the flow of groundwater. These effects could be short distances of reverse flow, obstructions that could cause concentrating of contaminants and/or detours of the groundwater around these structures, etc. It seems that the NYSDEC has chosen to ignore this data because it does not fit neatly within their overall scenario.

4. A plume has been located passing just to the east of the Site. This plume is very large and contains the same subject contaminants, but in concentrations many magnitudes higher. In fact so high that it is nearly at the saturation point of the groundwater. Due to its size, proximity, and concentrations, this plume must be considered a more logical source of contamination, especially considering the effects of the geology mentioned in the previous paragraph.

5. There are known upgradient sources of contamination that flow beneath this entire area, namely contamination plumes from the General Instrument and Verizon sites, and possibly several others. NYSDEC has chosen, until recently, to ignore these known spills and sources and treated the Wantagh Parkway as a natural barrier although it runs along the surface of the land and does not extend down as a wall to the aquifers. These sites are sources of known spills that are higher in concentration and therefore more likely to be the cause of the nuisance.

6. The Long Island Railroad passes directly upgradient of this area. The possibility of contamination coming from this property was never investigated, in spite of the LIRR previous history of using chemicals to do maintenance and clear the tracks of vegetation.

7. Between the Site and the off-site subject area, geoprobe groundwater samples showed no contamination. How does contamination move from one area to another without passing through the points in between?

8. Just beyond the points referred to in paragraph #7 above, are several businesses along Bond Street that have not been investigated. These businesses are likely users of many of the contaminating chemicals. One of these businesses was actually the site of a reported spill. Yet these businesses have not been investigated although geographically they are the most likely suspects.

9. Only 30% of the contaminants found in the air samples were found in the groundwater below the Site and business at that site. This strongly indicates a different source. A much more likely source would be a business previously located along Bond Street called Motorworks. They were a user of most, if not all, of the chemicals found in the air contamination. There was also a known spill at the Motorworks site that was not further investigated.

10. There was also an auto body shop called Scappy-Peck originally located at the property now known as 1025 Old Country Road. A business like this could logically be the source of the contamination, especially since they were located in the off-site subject area.

RESPONSE 39: The Department has established groundwater and soil vapor contamination have traveled from, and downgradient of, the Utility site. The OU1 investigation provided evidence that the on-site soil and groundwater were contaminated, including the monitoring wells at the downgradient edge of the site. The OU2 investigation tracked a groundwater and soil vapor plume directly downgradient of the site.

COMMENT 40: Figure 22 of the PRAP is a map showing the plumes in the New Cassel Industrial Area. This map has been used over and over in many of the NYSDEC's reports. The map shows that there is no plume emanating from the Site. It shows two other plumes both east and west of the Site. There is no plume shown because the data doesn't indicate a plume. The NYSDEC can only come to the conclusion there is the existence of a plume by ignoring some data and selectively choosing other data.

RESPONSE 40: Figure 6 of the PRAP (it is presumed that the reference to Figure 22, which is similar to this Figure 6, was to the OU3 ROD) does not include the data collected during the off-site investigation for this OU. The data collected during this OU2 off-site investigation shows groundwater contamination associated with this site has traveled downgradient of Utility site.

Brian Butensky submitted a letter (dated March 17, 2008) which included the following comments:

COMMENT 41: The studies apparently have cost a lot of money, but I have seen little actual work done to remediate the problem. Why is this taking so long?

RESPONSE 41: Remediation has been implemented at several sites within the New Cassel Industrial Area, including the on-site remediation of the Utility site. The Department has also funded the treatment system on the Bowling Green public water supply. The Department will continue our work in the New Cassel Industrial Area until all of the sites are remediated.

COMMENT 42: Wouldn't you agree that it seems that the contamination coming from the General Instrument site and the Verizon site dwarf most other potential sources of contamination. Wouldn't you agree that these two sites are by far the largest dangers to the Bowling Green Water District? Why have these property owners not been required to do a clean-up? Wouldn't you agree that it would be most expedient to go after the major causes of the problems (General Instrument and Verizon site owners) and not those whose involvement may or may not even exist? Doesn't it seem that you are blaming the little guy when you focus on the small businessperson and not those that have the major responsibility?

RESPONSE 42: Potentially Responsible Parties (PRPs) are those who may be legally liable for contamination at a site. This may include past or present owners and operators, waste generators, and haulers. While the Department is overseeing the investigation and remediation of both of the sites mentioned in your comment, the data collected during this OU2 off-site investigation shows groundwater contamination associated with this site has traveled downgradient of Utility site. This makes Utility Manufacturing/Wonder King responsible for that contamination.

COMMENT 43: The map contained within this document does not show any plume of contamination coming from the Utility Manufacturing/Wonder King Site. I have noticed other DEC maps also don't show any plume coming from this site. How could this site be responsible for contamination found downgradient, if there is no contamination coming from the site.

RESPONSE 43: Figure 4 in the ROD shows that the groundwater downgradient of the Utility site is contaminated with site-related compounds and establishes the presence of a groundwater contaminant plume downgradient of the Utility site.

APPENDIX B

Administrative Record

Administrative Record

Utility Manufacturing/Wonder King Site
Operable Unit No. 2
Site No. 130043H

1. Proposed Remedial Action Plan for the Utility Manufacturing/Wonder King site, Operable Unit No. 2, dated February 2008, prepared by the Department.

2. Referral Memorandum dated August 16, 2002 for the development and implementation of a Remedial Investigation/Feasibility Study for Operable Unit 2 of the site.

3. "Record of Decision, Utility Manufacturing/Wonder King Site, Operable Unit 1 - On-Site Contamination", dated March 2003, prepared by the Department

4. "Record of Decision, New Cassel Industrial Area Sites, Operable Unit 3", dated October 2003, prepared by the Department

5. "Off-Site Remedial Investigation & Feasibility Study Work Plan, Utility Manufacturing", dated June 2004, prepared by Environmental Resources Management

6. "Off-Site Remedial Investigation Report, Utility Manufacturing", dated December 2005, prepared by Environmental Resources Management

7. "Off-Site Feasibility Study Report, Utility Manufacturing", dated February 2006, prepared by Environmental Resources Management

8. "Work Plan, Off-Site Soil Vapor Intrusion Site Characterization and Mitigation, Utility Manufacturing/Wonder King, OU2", dated January 2007, prepared by Earth Tech

9. "Supplemental Remedial Investigation Report (Off-Site Soil Vapor Intrusion Site Characterization), Utility Manufacturing/Wonder King, OU2", dated October 2007, prepared by Earth Tech