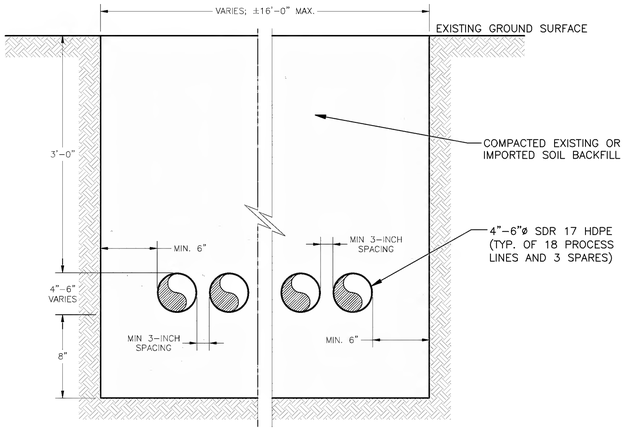

1/1.6 TRENCH DETAIL
SCALE: N.T.S.

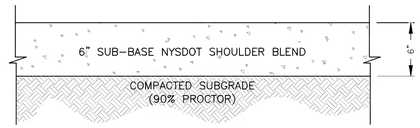

2/1.6 SECTION – PROPOSED COMPACTED AGGREGATE DETAIL
SCALE: N.T.S.

NOTES:

1. EXISTING WELLS SHALL BE LOCATED AND PROTECTED PRIOR TO BEGINNING EARTHWORK.
2. EXCAVATE THE SURFACE OF THE AREA TO BE IMPROVED TO THE PROPOSED SUBGRADE ELEVATION, COMPACT THE SUBGRADE SURFACE WITH A SMOOTH-DRUM ROLLER.
3. PROOF ROLL THE EXPOSED SUBGRADE WITH A LOADED TRIAXLE DUMP TRUCK OR SIMILAR EQUIPMENT. UNDER THE OBSERVATION OF THE ENGINEER. IF THE EXPOSED SURFACE IS DETERMINED TO BE UNSTABLE, REMOVE THE UNSTABLE MATERIAL BY UNDERCUTTING TO A MINIMUM DEPTH OF 8 INCHES AND BACKFILL WITH COMPACTED NYSDOT SHOULDER BLEND.
4. PLACE AND COMPACT 6 INCH LAYER OF AGGREGATE BASE. USE DENSE GRADED AGGREGATE MEETING NYSDOT TYPE 2. AGGREGATE BASE SHALL BE COMPACTED WITH A SMOOTH-DRUM VIBRATORY ROLLER. SURFACE OF AGGREGATE BASE SHALL BE GRADED TO PROVIDE POSITIVE DRAINAGE OFF ROAD.

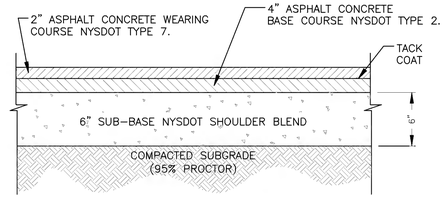

3/1.6 SECTION – ASPHALT PAVEMENT RESTORATION DETAIL
SCALE: N.T.S.

NOTES:

1. EXCAVATE THE EXISTING PAVEMENT.
2. PROOF ROLL THE EXPOSED SUBGRADE WITH A LOADED TRIAXLE DUMP TRUCK ORSIMILAR EQUIPMENT TO 90% PROCTOR. REMOVE UNSTABLE SUBGRADE BY UNDERCUTTING TO A MINIMUM DEPTH OF 8 INCHES AND BACKFILL WITH COMPACTED NYSDOT SHOULDER BLEND.
3. PLACE 6 INCH LAYER OF AGGREGATE BASE AND COMPACT. (NYSDOT TYPE 2) COMPACT PRIOR TO ASPHALT PLACEMENT WITH A SMOOTH-DRUM VIBRATORY ROLLER. PROVIDE GRADING OF AGGREGATE BASE SURFACE TO PROVIDE POSITIVE DRAINAGE OFF ROAD.

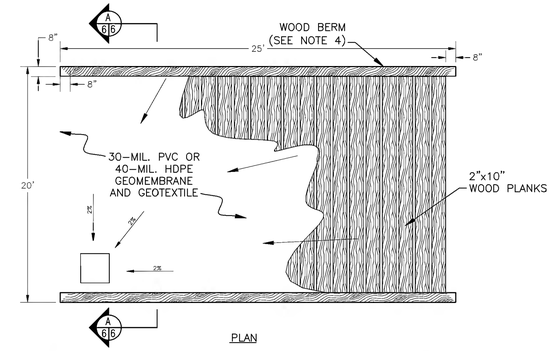

PLAN

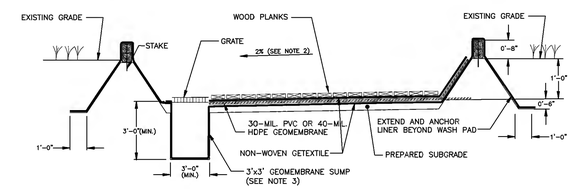

SECTION A–A

8/2.6 TYPICAL WASHDOWN PAD DETAIL
SCALE: N.T.S.

NOTES:

1. A 10oz. NON-WOVEN GEOTEXTILE FABRIC SHALL BE INSTALLED BETWEEN THE GEOMEMBRANE AND WOODEN PLANKS AND BETWEEN THE PREPARED SUBGRADE AND GEOMEMBRANE. LINER SHALL WRAP OVER THE WOODEN BERM AND BE ANCHORED A MINIMUM 6-INCHES BELOW THE GROUND SURFACE. THE GEOMEMBRANE SHALL BE PROPERLY SEAMED TO FORM A LEAK-PROOF LINER. THE MATERIALS AND INSTALLATION METHODS SHALL BE SUBMITTED TO THE ENGINEER FOR APPROVAL.
2. SURFACE OF THE DECONTAMINATION PAD SHALL BE GRADED AT A MINIMUM 2 PERCENT SLOPE TOWARD THE SUMP.
3. THE SUMP SHALL BE OF SIMILAR MATERIAL AS THE GEOMEMBRANE AND SHALL BE WELDED TO THE GEOMEMBRANE. CONTRACTOR SHALL BE RESPONSIBLE FOR TESTING WELDED SEAMS FOR LEAKS. SUMP SHALL BE PROVIDED WITH A STRUCTURAL GRATE AT SURFACE.
4. STAKES SHALL BE USED TO SECURE THE WOODEN BERMS TO THE FOUNDATION SUBBASE. STAKES SHALL BE EMBEDDED A MINIMUM OF 6 INCHES BELOW THE GROUND SURFACE. BERMS SHALL CONSIST OF AN EARTHEN BERM AND, 8"x8" WOODEN TIES, PLACED AROUND THE PERIMETER OF THE PAD.
5. DECONTAMINATION WATER COLLECTED IN THE SUMP SHALL BE CONVEYED VIA PUMPING OR OTHER METHODS APPROVED BY THE ENGINEER, AND STORED ON SITE IN TANKS OR EQUIVALENT. THE CONTRACTOR SHALL ARRANGE FOR TESTING AND DISPOSAL. CONTRACTOR SHALL DISPOSE ALL WATER AT AN APPROVED OFF-SITE FACILITY.
6. THE SUBGRADE SHALL BE SMOOTH WITHOUT STONES OR OTHER OBJECTS THAT COULD PUNCTURE THE GEOMEMBRANE. THE SUBGRADE SHALL BE PROOF-ROLLED WITH A LOADED TANDEM, AND ANY SOFT, SPONGY OR PUMPING SOIL SHALL BE REMOVED, REPLACED AND RECOMPACTED.
7. CONTRACTOR SHALL MAINTAIN AND REPAIR THE DECONTAMINATION PAD, AS NECESSARY. TIRE RUTS SHALL BE REPAIRED AND WOOD PLANKS SHALL BE MAINTAINED TO PROHIBIT CLOGGING AND ALLOW FOR THE INFILTRATION OF WATER. WOOD PLANKS THAT ARE REMOVED SHALL BE DISPOSED AT AN APPROVED OFF-SITE FACILITY.
8. EXCAVATED NATIVE SOIL SHALL BE TEMPORARILY STOCKPILED AND EMPLACED AT THE DECONTAMINATION PAD LOCATION DURING SITE RESTORATION.
9. ENTRANCE AND EXIT OF THE DECONTAMINATION PAD SHALL BE MADE WITH A SMOOTH TRANSITION TO THE EXISTING GRADE.

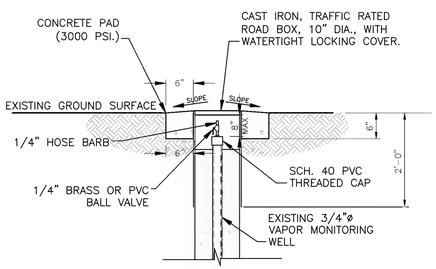

4/1.6 VAPOR MONITORING WELL DETAIL
SCALE: N.T.S.

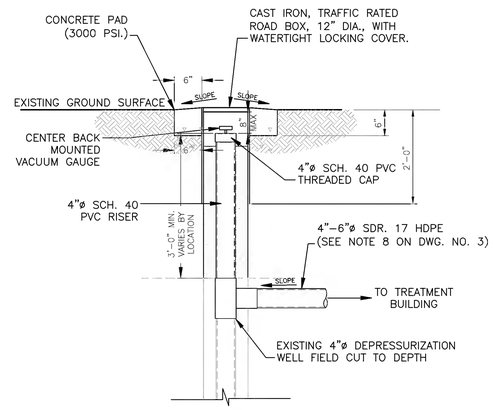

5/1.6 DEPRESSURIZATION WELL DETAIL
SCALE: N.T.S.

NOTES:

1. CONTRACTOR TO REVISE EXISTING ROAD BOXES FOR DEPRESSURIZATION WELLS.
2. ALL HDPE RECOVERY LINES TO BE SLOPED TOWARDS WELL (MINIMUM 0.5%).

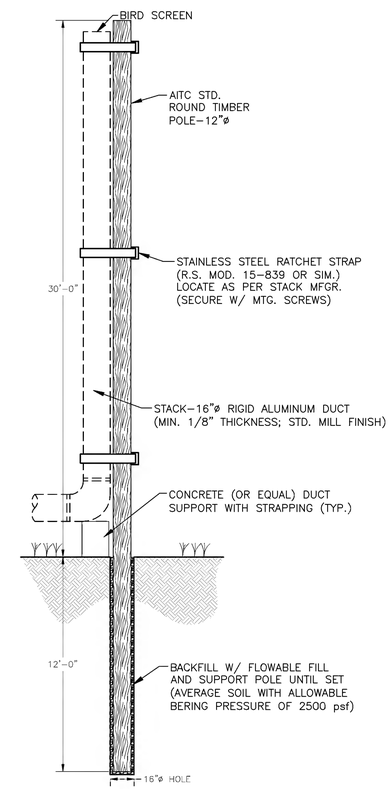

7/1.6 STACK DETAIL
SCALE: 1/4" = 1'-0"

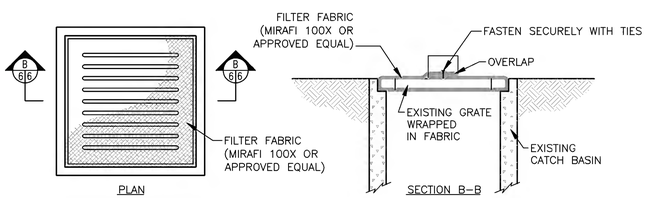

8/2.6 TYPICAL CATCH BASIN & SEDIMENT TRAP DETAIL
SCALE: N.T.S.

NOTES:

1. MINIMUM CONCRETE STRENGTH 4,000 PSI AT 28 DAYS.
2. STEEL REINFORCEMENT TO MEET A.S.T.M. C-478 SPECIFICATIONS.
3. MANHOLE COVER GRATE AND FRAME TO BE CAMBELL FOUNDRY COMPANY R-2500 OR EQUIVALENT.

Acad Version : R17.0s (LMS Tech) Plot Time : Fri, 07 Sep 2007 – 3:27pm
User Name : alsanchez Path\Name : G:\APROJECT\Northrop Grumman\Superfund\2007\OU3\NY001464.1407 VCS IRM\VCS Desig-Const\95% Design\Cadd\Dwgs\Sheets\06_Misc.Details & Notes.dwg
Current Plotsyle : ByColor

© 2007 ARCADIS OF NEW YORK, INC.

DRAWING CONFIDENTIAL: THIS DRAWING AND ALL INFORMATION CONTAINED THEREON IS AND SHALL REMAIN THE PROPERTY OF ARCADIS OF NEW YORK, INC. AS AN INSTRUMENT OF PROFESSIONAL SERVICE. THIS INFORMATION SHALL NOT BE USED IN WHOLE OR IN PART WITHOUT THE FULL KNOWLEDGE AND PRIOR WRITTEN CONSENT OF ARCADIS OF NEW YORK, INC.

SCALE VERIFICATION
THIS BAR REPRESENTS ONE INCH ON THE ORIGINAL DRAWING:
USE TO VERIFY FIGURE REPRODUCTION SCALE

NO.	ISSUED DATE	REVISION DESCRIPTION	BY/CKD
0	9/2007	95% DESIGN SUBMITTAL	AS/KZ

KEYPLAN

SEAL
KYRIACOS PIERIDES, PH.D., P.E.
N.Y. LIC. NO. 073670

ARCADIS OF NEW YORK, INC.
Two Huntington Quadrangle
Suite 1S10
Melville, NY 11747
Tel: 631-249-7600 Fax: 631-249-7610
www.arcadis-us.com

PROJECT TITLE
NORTHROP GRUMMAN OPERABLE UNIT 3
SOIL GAS INTERIM REMEDIAL MEASURE
FORMER GRUMMAN SETTLING PONDS
BETHPAGE, NEW YORK

PROJECT MANAGER	DEPARTMENT MANAGER	LEAD DESIGN PROF.	CHECKED BY
C. SAN GIOVANNI	C. TUOHY	C. TUOHY	K. ZEGEL
SHEET TITLE		TASK/PHASE NUMBER	DRAWN BY
MISCELLANEOUS DETAILS AND NOTES		00004	A. SANCHEZ
		PROJECT NUMBER	DRAWING NUMBER
		NY001464.1407	6

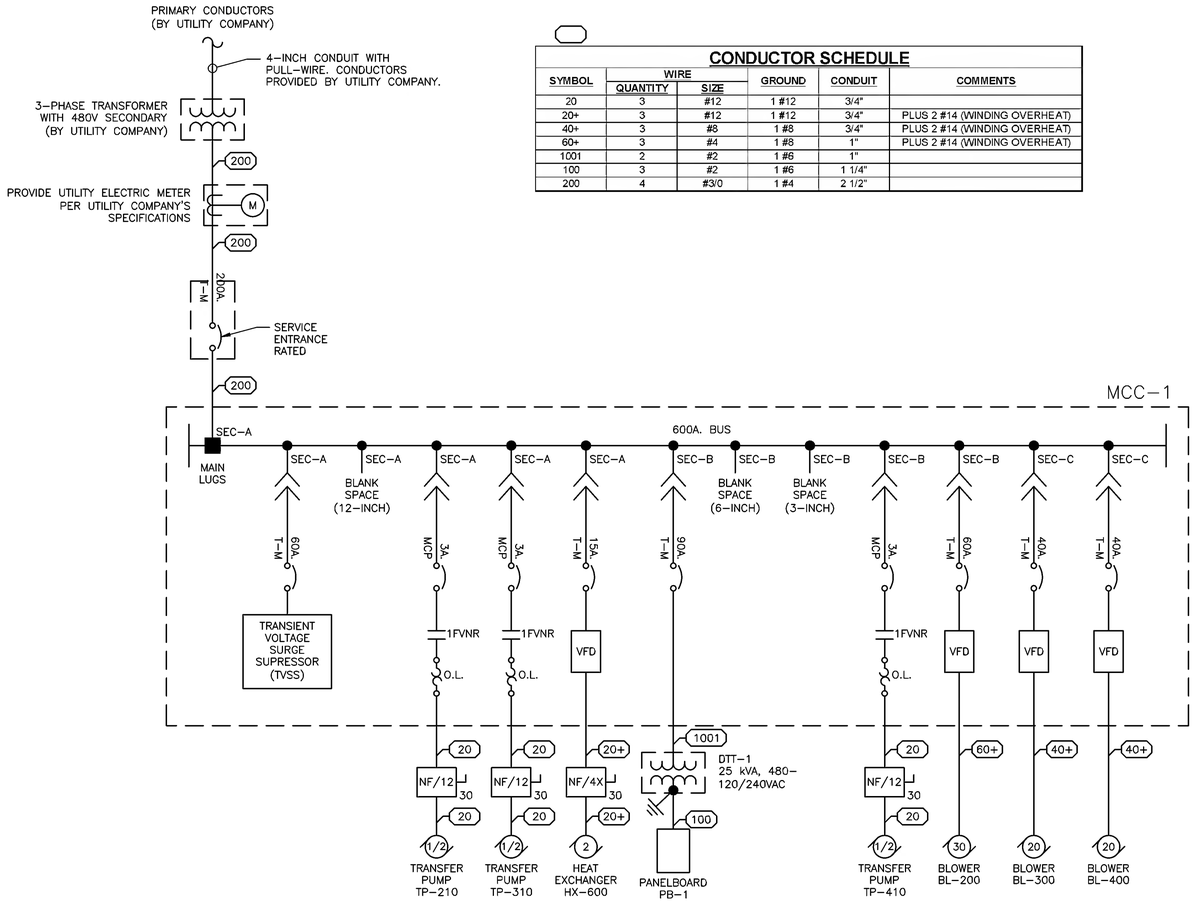

CONDUCTOR SCHEDULE

SYMBOL	WIRE QUANTITY	WIRE SIZE	GROUND	CONDUIT	COMMENTS
20	3	#12	1 #12	3/4"	
20+	3	#12	1 #12	3/4"	PLUS 2 #14 (WINDING OVERHEAT)
40+	3	#8	1 #8	3/4"	PLUS 2 #14 (WINDING OVERHEAT)
60+	3	#4	1 #8	1"	PLUS 2 #14 (WINDING OVERHEAT)
1001	2	#2	1 #6	1"	
100	3	#2	1 #6	1 1/4"	
200	4	#3/0	1 #4	2 1/2"	

ABBREVIATIONS

1FVNR	FULL VOLTAGE, NON–REVERSING (SIZE 1) STARTER
A.F.F.	ABOVE FINISHED FLOOR
A	AMPERES
DTT	DRY TYPE TRANSFORMER
FIT	FLOW INDICATING TRANSMITTER
FS	FLOW SWITCH
HP	HORSEPOWER
kVA	KILOVOLT–AMPS
kW	KILOWATT
LSH	LEVEL SWITCH HIGH
LSHH	LEVEL SWITCH HIGH HIGH
LSL	LEVEL SWITCH LOW
MCC	MOTOR CONTROL CENTER
MCP	MOTOR CIRCUIT PROTECTOR CIRCUIT BREAKER
O.L.	OVERLOAD
PB	PANELBOARD
PS	PRESSURE SWITCH
T–M	THERMAL MAGNETIC CIRCUIT BREAKER
UH	UNIT HEATER
V	VOLTS
VAC	VOLTS AC
VFD	VARIABLE FREQUENCY DRIVE
VF	VENTILATION FAN

LEGEND

- ENCLOSURE LIMITS
- MOTOR STARTER, FVNR–TYPE EQUIPPED WITH THERMAL OVERLOADS (FULL VOLTAGE, NON–REVERSING)
- MOTOR, # DENOTES H.P.
- EARTH GROUND
- TRANSFORMER, POWER
- MOLDED CASE CIRCUIT BREAKER
- DUPLEX RECEPTACLE, 120 VAC
- SINGLE POLE LIGHT SWITCH, 120 VAC
- ELECTRIC UTILITY METER CABINET
- THERMOSTAT
- ENCLOSED SWITCH (NF/XX ZZ) — NF = NON–FUSIBLE, XX = NEMA RATING, ZZ = AMPACITY RATING
- ENCLOSED MOTOR CONTROLLER (XX) — XX = NEMA RATING
- TELEPHONE OUTLET

PANEL PB-1 ENCLOSURE: NEMA TYPE 1, CABINET MOUNTING: SURFACE
VOLTS: 120 / 240, PHASE: 1, WIRE: 3W, 10,000 AIC, 100A. C/B, FEED: TOP

LOAD SERVED	LOAD (KVA) A	LOAD (KVA) B	BREAKER AMP	BREAKER POLE	CKT	PH	CKT	BREAKER POLE	BREAKER AMP	LOAD (KVA) A	LOAD (KVA) B	LOAD SERVED
UH-1	2.0		30	2	1	A	2	1	20	0.6		RECEPTACLES - BUILDING 1
		2.0			3	B	4	1	20		0.6	RECEPTACLES - BUILDING 2
UH-2	2.0		30	2	5	A	6	1	20	0.8		RECEPTACLES - OUTDOOR
		2.0			7	B	8	1	20		0.2	LIGHTS - BUILDING 1
UH-3	2.0		30	2	9	A	10	1	20	0.2		LIGHTS - BUILDING 2
		2.0			11	B	12	1	20		0.3	LIGHTS - OUTDOOR
AC-1	3.5		40	2	13	A	14	1	20	0.3		EXIT LIGHTS
		3.5			15	B	16	1	20			SPARE
VF-2	0.3		20	1	17	A	18	1	20			SPARE
VF-2		0.3	20	1	19	B	20	1	20			SPARE
MAIN CONTROL PANEL	1.0		20	1	21	A	22	1	20			SPARE
SPARE			20	1	23	B	24	1	20			SPARE
BLANK			20	1	25	A	26	1	20			BLANK
BLANK			20	1	27	B	28	1	20			BLANK
BLANK			20	1	29	A	30	1	20			BLANK
TOTAL	10.8	9.8								1.9	1.1	
TOTAL CONNECTED KVA:									A:	12.7		
									B:	10.9		
									TOTAL	23.5		

NOTE:
PROVIDE 2 #12, 1 #12 GROUND –3/4"C. FOR EACH LIGHTING AND RECEPTACLE CIRCUIT, UNLESS OTHERWISE NOTED.

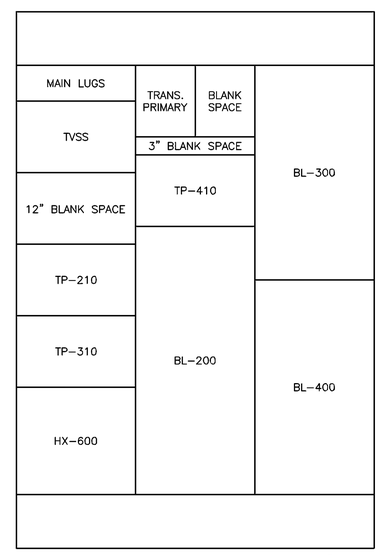

ELEVATION
MCC–1

NOTE:
VFD SECTIONS SHALL BE VENTILATED.

© 2007 ARCADIS OF NEW YORK, INC.

DRAWING CONFIDENTIAL: THIS DRAWING AND ALL INFORMATION CONTAINED THEREON IS AND SHALL REMAIN THE PROPERTY OF ARCADIS OF NEW YORK, INC. AS AN INSTRUMENT OF PROFESSIONAL SERVICE. THIS INFORMATION SHALL NOT BE USED IN WHOLE OR IN PART WITHOUT THE FULL KNOWLEDGE AND PRIOR WRITTEN CONSENT OF ARCADIS OF NEW YORK, INC.

SCALE VERIFICATION
THIS BAR REPRESENTS ONE INCH ON THE ORIGINAL DRAWING:
USE TO VERIFY FIGURE REPRODUCTION SCALE

NO.	ISSUED DATE	REVISION DESCRIPTION	BY/CKD
0	9/2007	95% DESIGN SUBMITTAL	TA/TA

KYRIACOS PIERIDES, PH.D P.E.
N.Y. LIC. NO. 073670

ARCADIS OF NEW YORK, INC.
Two Huntington Quadrangle
Suite 1S10
Melville, NY 11747
Tel: 631-249-7600 Fax: 631-249-7610
www.arcadis-us.com

NORTHROP GRUMMAN OPERABLE UNIT 3
SOIL GAS INTERIM REMEDIAL MEASURE
FORMER GRUMMAN SETTLING PONDS
BETHPAGE, NEW YORK

ELECTRICAL ONE–LINE DIAGRAM

PROJECT MANAGER	DEPARTMENT MANAGER	LEAD DESIGN PROF.	CHECKED BY
C. SAN GIOVANNI	D. OBERLE	T. ARMSTRONG	D. OBERLE
		TASK/PHASE NUMBER T0001	DRAWN BY T. ARMSTRONG
		PROJECT NUMBER NY001464.1407	DRAWING NUMBER 7

Current Plotstyle : ByColor
Layout Tab: E1 ONE-LINE
Date\Time : Fri, 07 Sep 2007 – 11:00am
Path\Name : G:\APROJECT\Northrop Grumman\Superfund\2007\OU3\WY001464.1407 VCS IRM\VCS Desig-Const\95% Design\Cadd\DEC_95% Submittal\07_ One-line.dwg
Acad Version : R17.0s (LMS Tech)
User Name : alsanchez

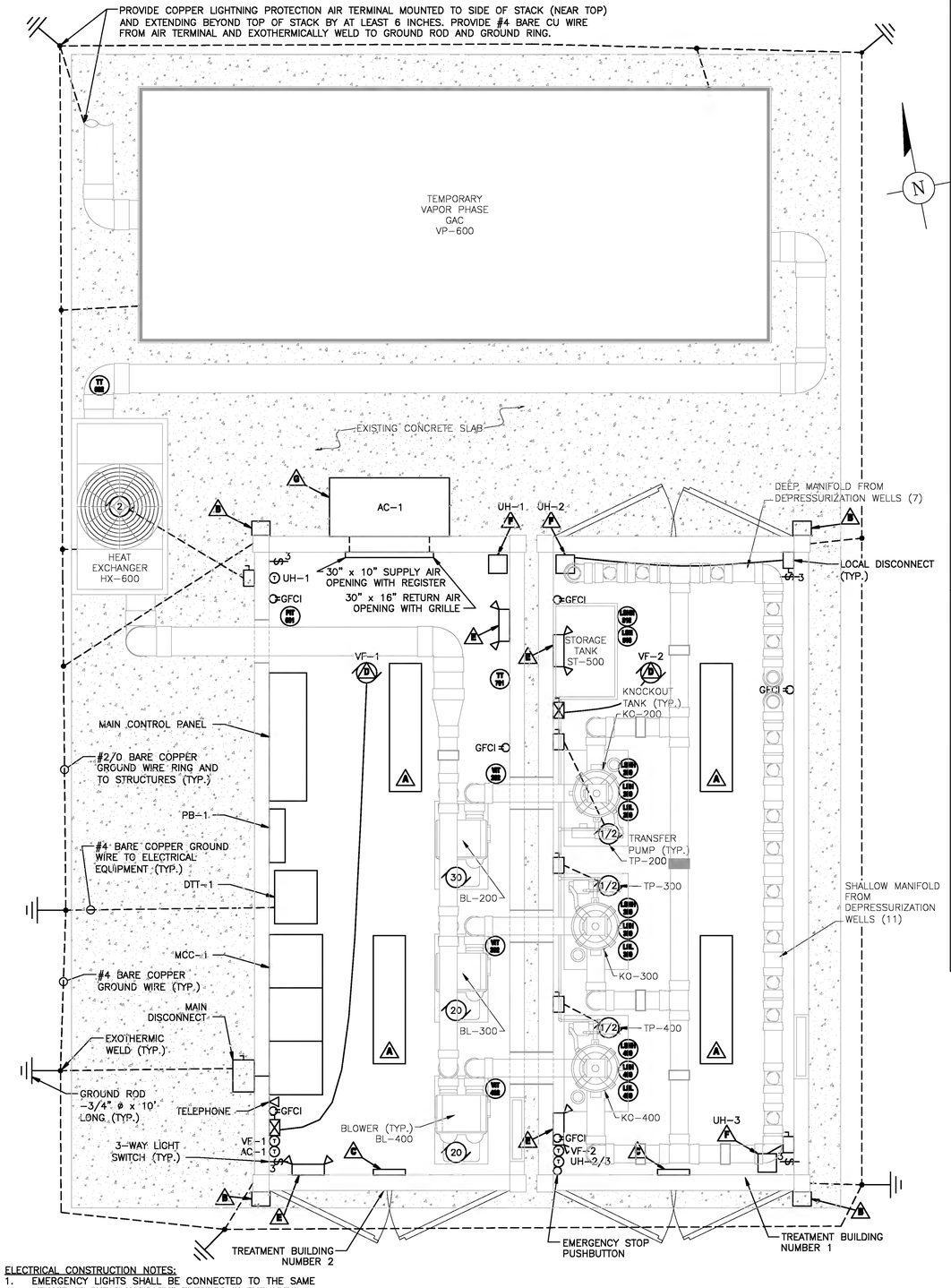

ELECTRICAL CONSTRUCTION NOTES:
1. EMERGENCY LIGHTS SHALL BE CONNECTED TO THE SAME CIRCUIT AS THE FLUORSCENT FIXTURES IN THE AREA.
2. MAINTAIN ELECTRICAL WORKING SPACE CLEARANCE IN FRONT OF ALL ELECTRICAL PANELS/ENCLOSURES PER NEC.

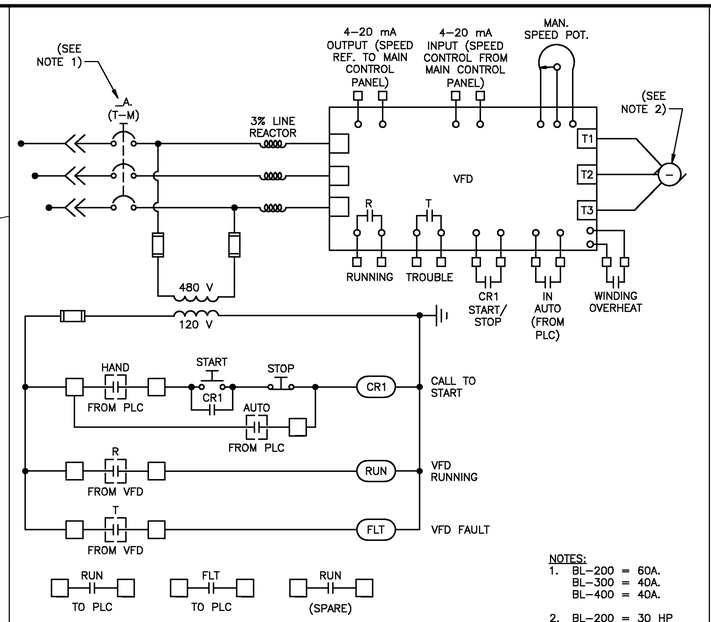

NOTES:
1. BL-200 = 60A.
   BL-300 = 40A.
   BL-400 = 40A.
2. BL-200 = 30 HP
   BL-300 = 20 HP
   BL-400 = 20 HP

SCHEMATIC – BL-200
(BL-300 AND BL-400 ARE SIMILAR)

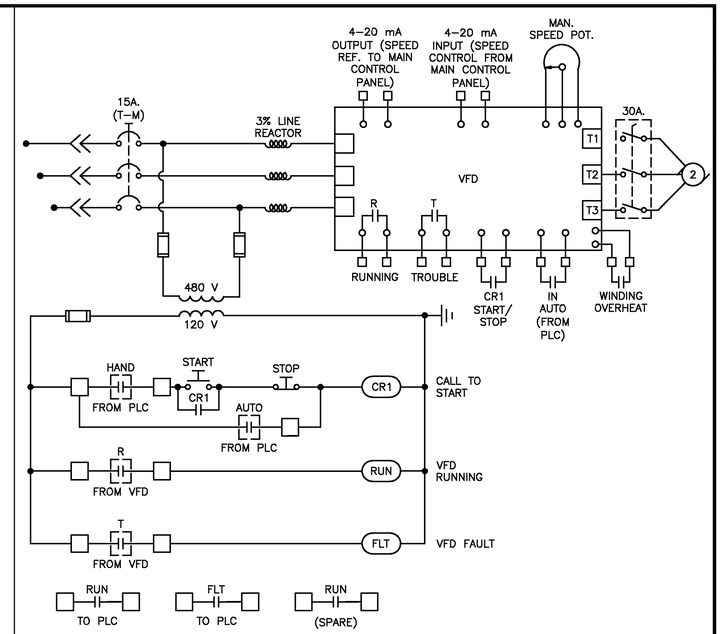

SCHEMATIC – HX-600

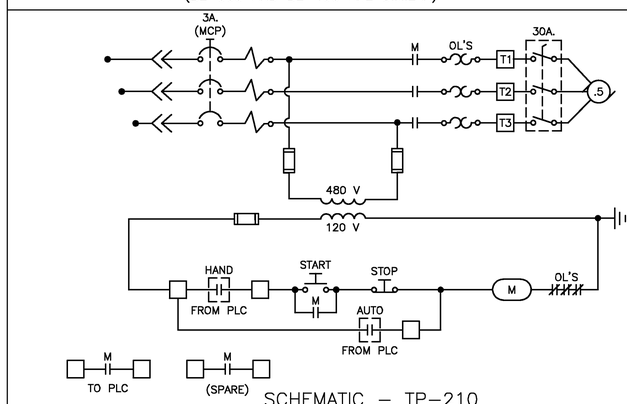

SCHEMATIC – TP-210
(TP-310 AND TP-410 ARE SIMILAR)

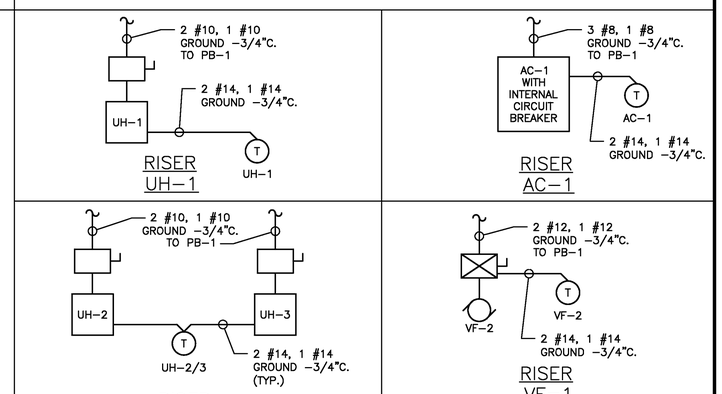

HVAC AND LIGHTING SCHEDULE

Item	Description	Mounting	Manufacturer & Part Number	Quantity	Remarks	Misc.
A	LIGHT FIXTURE, 3-LAMP FLUORESCENT, OPEN-TYPE	SURFACE	DAY-BRITE, CAT. #: 1F332PP120	4	120 VAC, 48-INCH T8 LAMPS, SURFACE MOUNT TO CEILING	
B	LIGHT FIXTURE, WALL PACK, HPS	WALL	DAY-BRITE, CAT. #: NWP070S12-LP	4	120 VAC, 70 WATT HPS LAMP, MOUNT 7'-6" ABOVE GRADE	
C	EXIT SIGN, ILLUMINATED	WALL	DAY-BRITE, CAT. #: VERW	4	SINGLE FACE, RED LED LETTERS, MOUNT 7'-2" A.F.F.	
D	VENTILATOR, ROOF-MOUNTED, UPBLAST	ROOF	Dayton 4HZ41	2	120 VAC, WITH THERMOSTAT	
E	EMERGENCY LIGHTS	WALL	DAY-BRITE, CAT. #: VU6	4	MOUNT 7'-2" A.F.F.	
F	UNIT HEATER, FORCED AIR, RESISTIVE	CEILING	CHROMALOX LUH-04-23-34	3	240 VAC, SINGLE PHASE, W/REMOTE THERMOSTAT	SEE NOTE
G	AIR CONDITIONER (AC-1)	WALL	MARVAIR COMPAC I, AVP42ACA00NU	1	240 VAC, SINGLE PHASE, W/REMOTE THERMOSTAT #50123, AND CIRCUIT BREAKER	

NOTE:
UH-2 AND UH-3 SHARE A T-STAT. PROVIDE A CONTACT FOR EACH HEATER.

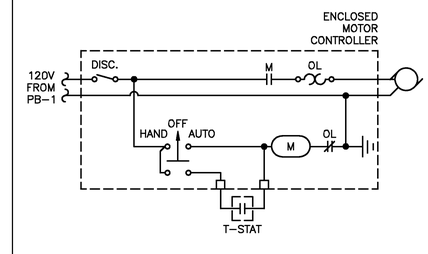

SCHEMATIC
VF-1
(VF-2 IS SIMILAR)

© 2007 ARCADIS OF NEW YORK, INC.

DRAWING CONFIDENTIAL: THIS DRAWING AND ALL INFORMATION CONTAINED THEREON IS AND SHALL REMAIN THE PROPERTY OF ARCADIS OF NEW YORK, INC. AS AN INSTRUMENT OF PROFESSIONAL SERVICE. THIS INFORMATION SHALL NOT BE USED IN WHOLE OR IN PART WITHOUT THE FULL KNOWLEDGE AND PRIOR WRITTEN CONSENT OF ARCADIS OF NEW YORK, INC.

SCALE VERIFICATION
THIS BAR REPRESENTS ONE INCH ON THE ORIGINAL DRAWING:
USE TO VERIFY FIGURE REPRODUCTION SCALE

NO.	ISSUED DATE	REVISION DESCRIPTION	BY/CKD
0	9/2007	95% DESIGN SUBMITTAL	TA/TA

0' 1' 2' 3' 4' 5' 6'
1/2"=1'-0"

KYRIACOS PIERIDES, PH.D., P.E.
N.Y. LIC. NO. 073670

ARCADIS OF NEW YORK, INC.
Two Huntington Quadrangle
Suite 1S10
Melville, NY 11747
Tel: 631-249-7600 Fax: 631-249-7610
www.arcadis-us.com

NORTHROP GRUMMAN OPERABLE UNIT 3
SOIL GAS INTERIM REMEDIAL MEASURE
FORMER GRUMMAN SETTLING PONDS
BETHPAGE, NEW YORK

ELECTRICAL LAYOUT, SCHEMATICS, AND RISER DIAGRAMS

PROJECT MANAGER	DEPARTMENT MANAGER	LEAD DESIGN PROF.	CHECKED BY
C. SAN GIOVANNI	D. OBERLE	T. ARMSTRONG	D. OBERLE
		TASK/PHASE NUMBER	DRAWN BY
		T0001	T. ARMSTRONG
		PROJECT NUMBER	DRAWING NUMBER
		NY001464.1407	8

Current Plotstyle : ByColor
Layout Tab: Layout1
Date\Time : Fri, 07 Sep 2007 – 2:13pm
Path\Name : G:\APROJECT\Northrop Grumman\Superfund\2007\OU3\NY001464.1407 VCS IRM\VCS Desig-Const\95% Design\Cadd\DEC_95% Submittal\08_ Electrical Layout.dwg
Acad Version : R17.0s (LMS Tech)
User Name : alsanchez

Current Plotsyle : ByColor
Layout Tab: E3 SIGNAL
Date\Time : Fri, 07 Sep 2007 - 12:06pm
Path\Name : G:\APROJECT\Northrop Grumman\Superfund\2007\OU3\NY001464.1407 VCS IRM\VCS Desig-Const\95% Design\Cadd\DEC_95% Submittal\09_ Signal List.dwg
Acad Version : R17.0s (LMS Tech)
User Name : alsanchez

DISCRETE INPUT

RACK:	1			
SLOT:	2			
	PID TAG			
ADDRESS	ID	LOOP	SOURCE	DESCRIPTION
00	N/A	N/A	CTRL. PNL. PB	ALARM RESET PUSHBUTTON
01	N/A	N/A	CTRL. PNL. PB	E-STOP PUSHBUTTON
02	N/A	N/A	BLDG 1 PB	E-STOP PUSHBUTTON
03	YL	200	MCC	BL-200 "RUNNING"
04	FL	200	MCC	BL-200 "FAULT" - VFD
05	YL	300	MCC	BL-300 "RUNNING"
06	FL	300	MCC	BL-300 "FAULT" - VFD
07	YL	400	MCC	BL-400 "RUNNING"
08	FL	400	MCC	BL-400 "FAULT" - VFD
09	YL	210	MCC	TP-210 "RUNNING"
10	YL	310	MCC	TP-310 "RUNNING"
11	YL	410	MCC	TP-410 "RUNNING"
12	YL	600	MCC	HX-600 "RUNNING"
13	FL	600	MCC	HX-600 "FAULT" - VFD
14				<SPARE>
15				<SPARE>

DISCRETE INPUT

RACK:	1			
SLOT:	3			
	PID TAG			
ADDRESS	ID	LOOP	SOURCE	DESCRIPTION
00	LSHH	200	LEVEL SW.	KO-200 LEVEL SWITCH HIGH HIGH
01	LSH	200	LEVEL SW.	KO-200 LEVEL SWITCH HIGH
02	LSL	200	LEVEL SW.	KO-200 LEVEL SWITCH LOW
03	LSHH	300	LEVEL SW.	KO-300 LEVEL SWITCH HIGH HIGH
04	LSH	300	LEVEL SW.	KO-300 LEVEL SWITCH HIGH
05	LSL	300	LEVEL SW.	KO-300 LEVEL SWITCH LOW
06	LSHH	400	LEVEL SW.	KO-400 LEVEL SWITCH HIGH HIGH
07	LSH	400	LEVEL SW.	KO-400 LEVEL SWITCH HIGH
08	LSL	400	LEVEL SW.	KO-400 LEVEL SWITCH LOW
09	LSHH	510	LEVEL SW.	ST-510 LEVEL SWITCH HIGH HIGH
10	LSH	510	LEVEL SW.	ST-510 LEVEL SWITCH HIGH
11				<SPARE>
12				<SPARE>
13				<SPARE>
14				<SPARE>
15				<SPARE>

DISCRETE OUTPUT

RACK:	1		
SLOT:	4		
	PID TAG		
ADDRESS	ID	LOOP	DESCRIPTION
00	N/A	AD	AUTODIALER CALL RELAY
01	N/A	200	BL-200 MOTOR CALL TO RUN RELAY
02	N/A	300	BL-300 MOTOR CALL TO RUN RELAY
03	N/A	400	BL-400 MOTOR CALL TO RUN RELAY
04	N/A	210	TP-210 MOTOR CALL TO RUN RELAY
05	N/A	310	TP-310 MOTOR CALL TO RUN RELAY
06	N/A	410	TP-410 MOTOR CALL TO RUN RELAY
07	N/A	600	HX-600 MOTOR CALL TO RUN RELAY
08	N/A	200	BL-200 IN HAND
09	N/A	300	BL-300 IN HAND
10	N/A	400	BL-400 IN HAND
11	N/A	210	TP-210 IN HAND
12	N/A	310	TP-310 IN HAND
13	N/A	410	TP-410 IN HAND
14	N/A	600	HX-600 IN HAND
15			<SPARE>

DISCRETE OUTPUT

RACK:	1		
SLOT:	5		
	PID TAG		
ADDRESS	ID	LOOP	DESCRIPTION
00	N/A	200	BL-200 IN AUTO (SEE NOTE 12)
01	N/A	300	BL-300 IN AUTO (SEE NOTE 12)
02	N/A	400	BL-400 IN AUTO (SEE NOTE 12)
03	N/A	210	TP-210 IN AUTO
04	N/A	310	TP-310 IN AUTO
05	N/A	410	TP-410 IN AUTO
06	N/A	600	HX-600 IN AUTO (SEE NOTE 12)
07			<SPARE>
08			<SPARE>
09			<SPARE>
10			<SPARE>
11			<SPARE>
12			<SPARE>
13			<SPARE>
14			<SPARE>
15			<SPARE>

ANALOG INPUT

RACK:	1			
SLOT:	6			
	PID TAG			
ADDRESS	ID	LOOP	RANGE	DESCRIPTION
00	VIT	202		BL-200 SUCTION VACCUUM
01	VIT	302		BL-300 SUCTION VACCUUM
02	VIT	402		BL-400 SUCTION VACCUUM
03	PIT	601		BLOWER DISCHARGE PRESSURE
04	TT	602		HX-600 DISCHARGE TEMPERATURE
05	TT	701		BUILDING NO. 2 ROOM TEMPERATURE
06				<SPARE>
07				<SPARE>

ANALOG INPUT

RACK:	1			
SLOT:	7			
	PID TAG			
ADDRESS	ID	LOOP	RANGE	DESCRIPTION
00	N/A	200	0 - 100%	BL-200 VFD SPEED FEEDBACK
01	N/A	300	0 - 100%	BL-300 VFD SPEED FEEDBACK
02	N/A	400	0 - 100%	BL-400 VFD SPEED FEEDBACK
03	N/A	600	0 - 100%	HX-600 VFD SPEED FEEDBACK
04				<SPARE>
05				<SPARE>
06				<SPARE>
07				<SPARE>

ANALOG OUTPUT

RACK:	1			
SLOT:	8			
	PID TAG			
ADDRESS	ID	LOOP	RANGE	DESCRIPTION
00	N/A	200	0 - 100%	BL-200 VFD SPEED SETPOINT
01	N/A	300	0 - 100%	BL-300 VFD SPEED SETPOINT
02	N/A	400	0 - 100%	BL-400 VFD SPEED SETPOINT
03	N/A	600	0 - 100%	HX-600 VFD SPEED SETPOINT

PROGRAMMING

NO.	EQUIPMENT	INDUSTRIAL COMPUTER FUNCTION	PLC FUNCTION
1	BL-200	HAND - OFF - AUTO SELECTION	VIRTUAL DISCRETE INPUT FROM COMPUTER - ENERGIZE RESPECTIVE OUTPUT
2	BL-200	RUNNING INDICATION LIGHT (GREEN)	DISCRETE INPUT - ACTIVATE VIRTUAL OUTPUT TO COMPUTER
3	BL-200	FAULT INDICATION LIGHT (RED)	DISCRETE INPUT or NO RUNNING FEEDBACK AFTER MOTOR CALL - ACTIVATE VIRTUAL OUTPUT TO COMPUTER **
4	BL-200	DISPLAY BLOWER SPEED (0 - 100%)	ANALOG INPUT - DISPLAY VIRTUAL OUTPUT TO COMPUTER
5	BL-200	BLOWER SPEED SETPOINT (0 - 100%)	VIRTUAL ANALOG INPUT FROM COMPUTER - OUTPUT VALUE TO VFD IF HOA IS IN "AUTO"
6	BL-300	HAND - OFF - AUTO SELECTION	VIRTUAL DISCRETE INPUT FROM COMPUTER - ENERGIZE RESPECTIVE OUTPUT
7	BL-300	RUNNING INDICATION LIGHT (GREEN)	DISCRETE INPUT - ACTIVATE VIRTUAL OUTPUT TO COMPUTER
8	BL-300	FAULT INDICATION LIGHT (RED)	DISCRETE INPUT or NO RUNNING FEEDBACK AFTER MOTOR CALL - ACTIVATE VIRTUAL OUTPUT TO COMPUTER **
9	BL-300	DISPLAY BLOWER SPEED (0 - 100%)	ANALOG INPUT - DISPLAY VIRTUAL OUTPUT TO COMPUTER
10	BL-300	BLOWER SPEED SETPOINT (0 - 100%)	VIRTUAL ANALOG INPUT FROM COMPUTER - OUTPUT VALUE TO VFD IF HOA IS IN "AUTO"
11	BL-400	HAND - OFF - AUTO SELECTION	VIRTUAL DISCRETE INPUT FROM COMPUTER - ENERGIZE RESPECTIVE OUTPUT
12	BL-400	RUNNING INDICATION LIGHT (GREEN)	DISCRETE INPUT - ACTIVATE VIRTUAL OUTPUT TO COMPUTER
13	BL-400	FAULT INDICATION LIGHT (RED)	DISCRETE INPUT or NO RUNNING FEEDBACK AFTER MOTOR CALL - ACTIVATE VIRTUAL OUTPUT TO COMPUTER **
14	BL-400	DISPLAY BLOWER SPEED (0 - 100%)	ANALOG INPUT - DISPLAY VIRTUAL OUTPUT TO COMPUTER
15	BL-400	BLOWER SPEED SETPOINT (0 - 100%)	VIRTUAL ANALOG INPUT FROM COMPUTER - OUTPUT VALUE TO VFD IF HOA IS IN "AUTO"
16	HX-600	HAND - OFF - AUTO SELECTION	VIRTUAL DISCRETE INPUT FROM COMPUTER - ENERGIZE RESPECTIVE OUTPUT
17	HX-600	RUNNING INDICATION LIGHT (GREEN)	DISCRETE INPUT - ACTIVATE VIRTUAL OUTPUT TO COMPUTER
18	HX-600	FAULT INDICATION LIGHT (RED)	DISCRETE INPUT or NO RUNNING FEEDBACK AFTER MOTOR CALL - ACTIVATE VIRTUAL OUTPUT TO COMPUTER **
19	HX-600	DISPLAY MOTOR SPEED (0 - 100%)	ANALOG INPUT - DISPLAY VIRTUAL OUTPUT TO COMPUTER
20	HX-600	TEMPERATURE SETPOINT (50 - 150 DEG F)	VIRTUAL ANALOG INPUT FROM COMPUTER - PROVIDE PID CONTROL LOOP BASED ON SETPOINT AND TT-602 ANALOG INPUT - OUTPUT ANALOG VALUE TO VFD IF HOA IS IN "AUTO" TO MAINTAIN TEMPERATURE BASED ON SETPOINT
21	TP-210	HAND - OFF - AUTO SELECTION	VIRTUAL DISCRETE INPUT FROM COMPUTER - ENERGIZE RESPECTIVE OUTPUT
22	TP-210	RUNNING INDICATION LIGHT (GREEN)	DISCRETE INPUT - ACTIVATE VIRTUAL OUTPUT TO COMPUTER
23	TP-210	FAULT INDICATION LIGHT (RED)	DISCRETE INPUT or NO RUNNING FEEDBACK AFTER MOTOR CALL - ACTIVATE VIRTUAL OUTPUT TO COMPUTER **
24	TP-310	HAND - OFF - AUTO SELECTION	VIRTUAL DISCRETE INPUT FROM COMPUTER - ENERGIZE RESPECTIVE OUTPUT
25	TP-310	RUNNING INDICATION LIGHT (GREEN)	DISCRETE INPUT - ACTIVATE VIRTUAL OUTPUT TO COMPUTER
26	TP-310	FAULT INDICATION LIGHT (RED)	DISCRETE INPUT or NO RUNNING FEEDBACK AFTER MOTOR CALL - ACTIVATE VIRTUAL OUTPUT TO COMPUTER **
27	TP-410	HAND - OFF - AUTO SELECTION	VIRTUAL DISCRETE INPUT FROM COMPUTER - ENERGIZE RESPECTIVE OUTPUT
28	TP-410	RUNNING INDICATION LIGHT (GREEN)	DISCRETE INPUT - ACTIVATE VIRTUAL OUTPUT TO COMPUTER
29	TP-410	FAULT INDICATION LIGHT (RED)	DISCRETE INPUT or NO RUNNING FEEDBACK AFTER MOTOR CALL - ACTIVATE VIRTUAL OUTPUT TO COMPUTER **
30	LSHH-200	KO-200 HIGH-HIGH LEVEL INDICATION LIGHT (RED)	DISCRETE INPUT - ACTIVATE VIRTUAL OUTPUT TO COMPUTER AFTER 5 SECONDS **
31	LSHH-300	KO-300 HIGH-HIGH LEVEL INDICATION LIGHT (RED)	DISCRETE INPUT - ACTIVATE VIRTUAL OUTPUT TO COMPUTER AFTER 5 SECONDS **
32	LSHH-400	KO-400 HIGH-HIGH LEVEL INDICATION LIGHT (RED)	DISCRETE INPUT - ACTIVATE VIRTUAL OUTPUT TO COMPUTER AFTER 5 SECONDS **
33	LSH-510	ST-510 HIGH LEVEL INDICATION LIGHT (ORANGE)	DISCRETE INPUT - ACTIVATE VIRTUAL OUTPUT TO COMPUTER AFTER 5 SECONDS **
34	LSHH-510	ST-510 HIGH-HIGH LEVEL INDICATION LIGHT (RED)	DISCRETE INPUT - ACTIVATE VIRTUAL OUTPUT TO COMPUTER AFTER 5 SECONDS **
35	VIT-202	BL-200 SUCTION VACCUUM LOW INDICATION LIGHT (RED)	ANALOG INPUT - ACTIVATE VIRTUAL OUTPUT TO COMPUTER AFTER 5 SECONDS OF VALUE LESSER OR EQUAL TO USER SETPOINT **
36	VIT-202	BL-200 SUCTION VACCUUM HIGH INDICATION LIGHT (ORANGE)	ANALOG INPUT - ACTIVATE VIRTUAL OUTPUT TO COMPUTER AFTER 5 SECONDS OF VALUE GREATER OR EQUAL TO USER SETPOINT **
37	VIT-202	BL-200 SUCTION VACCUUM HIGH-HIGH INDICATION LIGHT (RED)	ANALOG INPUT - ACTIVATE VIRTUAL OUTPUT TO COMPUTER AFTER 5 SECONDS OF VALUE GREATER OR EQUAL TO USER SETPOINT **
38	VIT-302	BL-300 SUCTION VACCUUM LOW INDICATION LIGHT (RED)	ANALOG INPUT - ACTIVATE VIRTUAL OUTPUT TO COMPUTER AFTER 5 SECONDS OF VALUE LESSER OR EQUAL TO USER SETPOINT **
39	VIT-302	BL-300 SUCTION VACCUUM HIGH INDICATION LIGHT (ORANGE)	ANALOG INPUT - ACTIVATE VIRTUAL OUTPUT TO COMPUTER AFTER 5 SECONDS OF VALUE GREATER OR EQUAL TO USER SETPOINT **
40	VIT-302	BL-300 SUCTION VACCUUM HIGH-HIGH INDICATION LIGHT (RED)	ANALOG INPUT - ACTIVATE VIRTUAL OUTPUT TO COMPUTER AFTER 5 SECONDS OF VALUE GREATER OR EQUAL TO USER SETPOINT **
41	VIT-402	BL-400 SUCTION VACCUUM LOW INDICATION LIGHT (RED)	ANALOG INPUT - ACTIVATE VIRTUAL OUTPUT TO COMPUTER AFTER 5 SECONDS OF VALUE LESSER OR EQUAL TO USER SETPOINT **
42	VIT-402	BL-400 SUCTION VACCUUM HIGH INDICATION LIGHT (ORANGE)	ANALOG INPUT - ACTIVATE VIRTUAL OUTPUT TO COMPUTER AFTER 5 SECONDS OF VALUE GREATER OR EQUAL TO USER SETPOINT **
43	VIT-402	BL-400 SUCTION VACCUUM HIGH-HIGH INDICATION LIGHT (RED)	ANALOG INPUT - ACTIVATE VIRTUAL OUTPUT TO COMPUTER AFTER 5 SECONDS OF VALUE GREATER OR EQUAL TO USER SETPOINT **
44	PIT-601	HX-600 SUCTION PRESSURE HIGH INDICATION LIGHT (RED)	ANALOG INPUT - ACTIVATE VIRTUAL OUTPUT TO COMPUTER AFTER 5 SECONDS OF VALUE GREATER OR EQUAL TO USER SETPOINT **
45	TT-602	HX-600 DISCHARGE TEMPERATURE HIGH INDICATION LIGHT (RED)	ANALOG INPUT - ACTIVATE VIRTUAL OUTPUT TO COMPUTER AFTER 5 SECONDS OF VALUE GREATER OR EQUAL TO USER SETPOINT **
46	TT-701	BUILDING NO. 2 ROOM TEMPERATURE HIGH INDICATION LIGHT (RED)	ANALOG INPUT - ACTIVATE VIRTUAL OUTPUT TO COMPUTER AFTER 5 SECONDS OF VALUE GREATER OR EQUAL TO USER SETPOINT **

** – REFER TO PLC INTERLOCK DESCRIPTIONS ON DRAWING 3

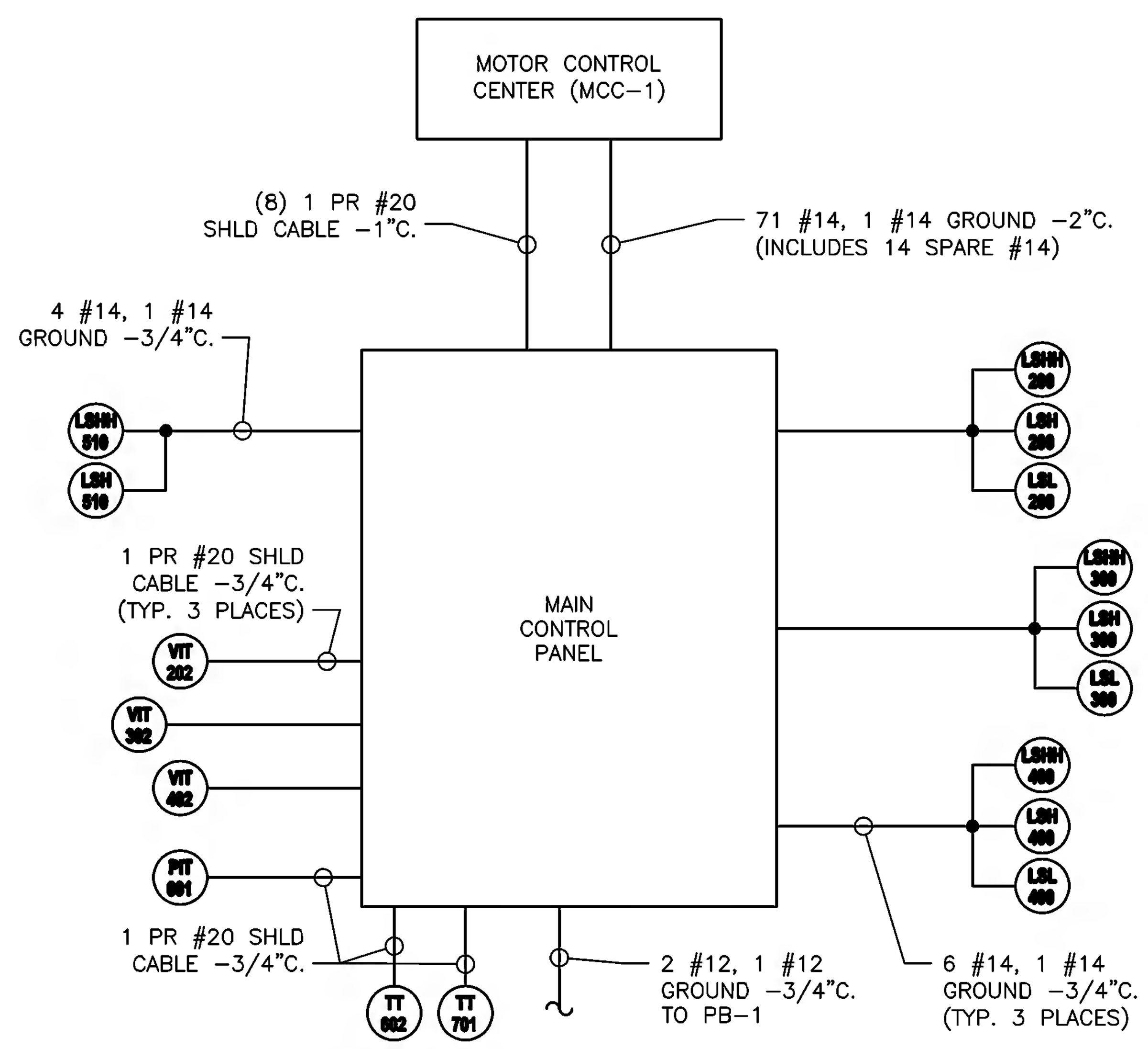

RISER
MAIN CONTROL PANEL

NOTES:

1. THIS DRAWING INCLUDES INPUT AND OUTPUT SIGNALS TO THE NEW PLC PROVIDED WITHIN THE MAIN CONTROL PANEL.
2. PROVIDE A SLC 5/04 PROCESSOR WITH EPROM IN RACK 1, SLOT 1 OF THIS PLC.
3. RACK 1 SHALL BE 10-SLOT RACK.
4. PROVIDE ALLEN-BRADLEY 1747-P4 POWER SUPPLY.
5. SLOTS 9 AND 10 OF RACK 1 SHALL BE BLANK FOR FUTURE USE.
6. PROVIDE 120 VAC POWER DISTRIBUTION, CIRCUIT BREAKER(S), RELAYS, 24 VOLT POWER SUPPLY, AND ANCILLARY EQUIPMENT WITHIN THE MAIN CONTROL PANEL AS REQUIRED. PROVIDE AN INTERPOSING RELAY FOR EACH DISCRETE OUTPUT (INCLUDING SPARES).
7. PROVIDE AN INDUSTRIAL FLAT PANEL COMPUTER WITH TOUCH SCREEN CONTROLS ON FRONT DOOR OF MAIN CONTROL PANEL. INDUSTRIAL COMPUTER SHALL INCLUDE:
   A. OPERATOR INTERFACE SOFTWARE PROGRAMMED TO INCLUDE THE FUNCTIONS LISTED ON THIS DRAWING;
   B. ETHERNET PORT FOR FUTURE CONNECTION TO REMOTE SCADA SYSTEM.
   C. DATA STORAGE CAPABILITY.
8. PLC SHALL BE PROGRAMMED TO INCLUDE THE FUNCTIONS LISTED ON DRAWING 3 AND THIS DRAWING.
9. MAIN CONTROL PANEL ENCLOSURE SHALL BE NEMA 12 HOFFMAN OR EQUAL SIZED TO INCLUDE COMPONENTS LISTED ON THIS DRAWING PLUS 20% SPARE SPACE. PANEL WIDTH SHALL NOT EXCEED 48 INCHES.
10. PANEL BUILDER SHALL PROVIDE DETAILED SHOP DRAWINGS OF THE MAIN CONTROL PANEL FOR ENGINEER APPROVAL PRIOR TO CONSTRUCTION.
11. PANEL BUILDER SHALL PROVIDE ACCURATE AS-BUILT DRAWINGS UPON DELIVERY OF THE MAIN CONTROL PANEL.
12. PROVIDE INTERPOSING RELAY WITH MINIMUM OF 2 NORMALLY OPEN CONTACTS. REFER TO SCHEMATICS ON DRAWING 8.

© 2007 ARCADIS OF NEW YORK, INC.

DRAWING CONFIDENTIAL: THIS DRAWING AND ALL INFORMATION CONTAINED THEREON IS AND SHALL REMAIN THE PROPERTY OF ARCADIS OF NEW YORK, INC. AS AN INSTRUMENT OF PROFESSIONAL SERVICE. THIS INFORMATION SHALL NOT BE USED IN WHOLE OR IN PART WITHOUT THE FULL KNOWLEDGE AND PRIOR WRITTEN CONSENT OF ARCADIS OF NEW YORK, INC.

SCALE VERIFICATION
THIS BAR REPRESENTS ONE INCH ON THE ORIGINAL DRAWING:
USE TO VERIFY FIGURE REPRODUCTION SCALE

NO.	ISSUED DATE	REVISION DESCRIPTION	BY/CKD
0	9/2007	95% DESIGN SUBMITTAL	TA/TA

KYRIACOS PIERIDES, PH.D., P.E.
N.Y. LIC. NO. 073670

ARCADIS OF NEW YORK, INC.
Two Huntington Quadrangle
Suite 1S10
Melville, NY 11747
Tel: 631-249-7600 Fax: 631-249-7610
www.arcadis-us.com

NORTHROP GRUMMAN OPERABLE UNIT 3
SOIL GAS INTERIM REMEDIAL MEASURE
FORMER GRUMMAN SETTLING PONDS
BETHPAGE, NEW YORK

ELECTRICAL SIGNAL LIST AND RISER DIAGRAM

PROJECT MANAGER	DEPARTMENT MANAGER	LEAD DESIGN PROF.	CHECKED BY
C. SAN GIOVANNI	D. OBERLE	T. ARMSTRONG	D. OBERLE
		TASK/PHASE NUMBER: T0001	DRAWN BY: T. ARMSTRONG
		PROJECT NUMBER: NY001464.1407	DRAWING NUMBER: 9

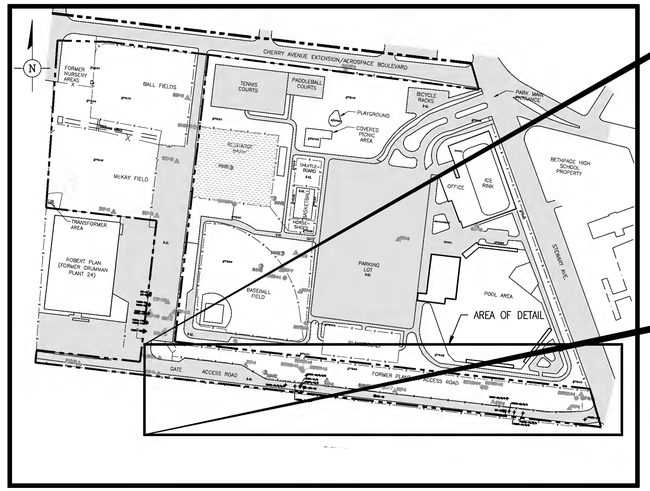

SITE PLAN

0 200' 400'

SCALE IN FEET

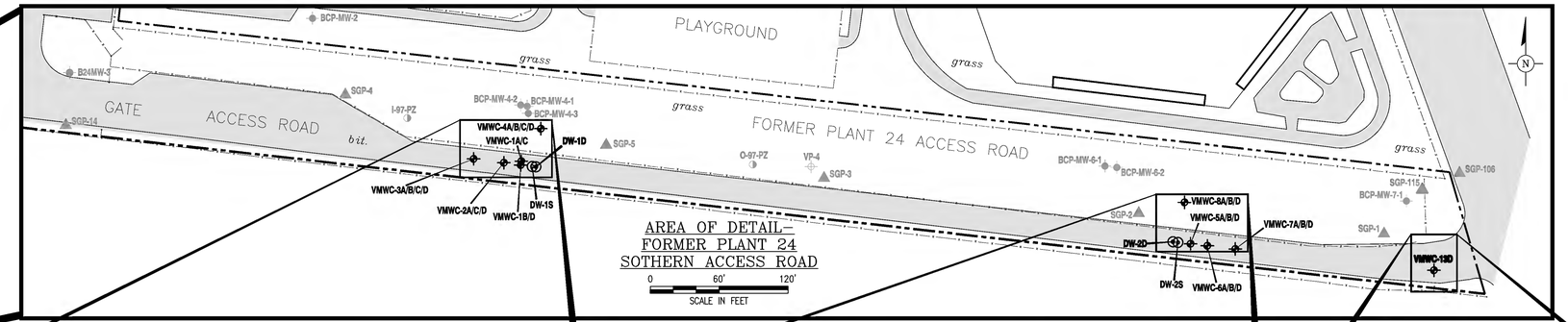

AREA OF DETAIL–
FORMER PLANT 24
SOTHERN ACCESS ROAD

0 60' 120'

SCALE IN FEET

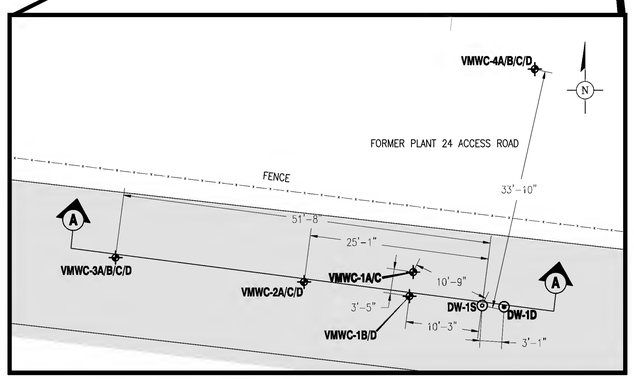

DEPRESSURIZATION WELLS DW–1S & DW–1D WITH ASSOCIATED VACUUM MONITORING WELL CLUSTERS (VMWC)

0 10' 20'

SCALE IN FEET

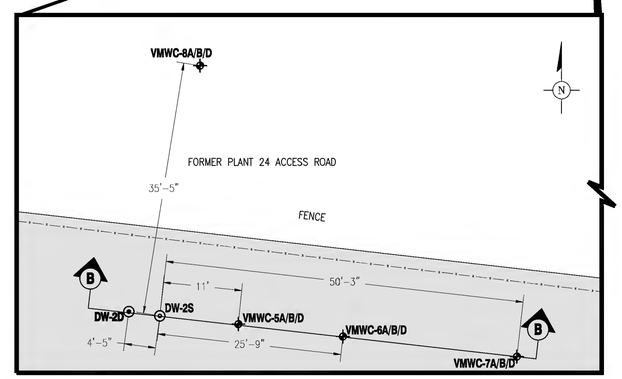

DEPRESSURIZATION WELLS DW–2S & DW–2D WITH ASSOCIATED VACUUM MONITORING WELL CLUSTERS (VMWC)

0 10' 20'

SCALE IN FEET

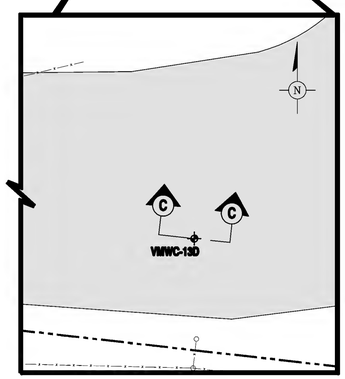

ASSOCIATED VACUUM MONITORING WELL VMWC–13D

0 10' 20'

SCALE IN FEET

LEGEND:

- NORTHROP GRUMMAN PROPERTY LINE
- FENCE
- LIMITS OF BETHPAGE HIGH SCHOOL MAIN BUILDING
- bit. — BITUMINOUS PAVEMENT
- SGP-11 — TEMPORARY SOIL GAS POINT INSTALLED DURING OU–3 REMEDIAL INVESTIGATION
- BCP-MW-4-2 — MONITORING WELLS
- O-97-PZ — PIEZOMETER
- VP-4 — VERTICAL PROFILE BORING (VP)
- DW-2S — SHALLOW DEPRESSURIZATION WELL (DW–S)
- DW-2D — DEEP DEPRESSURIZATION WELL (DW–D)
- VMWC-1A/C — VACUUM MONITORING WELL CLUSTER (VMWC)

NOTES:

1. WATER TABLE ESTIMATE WAS OBTAINED DURING PNEUMATIC CONDUCTIVITY TEST FROM LOCATIONS VMWC–1D AND VMWC–5D ON MARCH 22, 2007.
2. LOW PERMEABILITY ZONES (CLAY, SILT, SILTY CLAY AND SANDY CLAY) WITH A THICKNESS GREATER THAN 6–INCHES ARE SHOWN.
3. TEMPORARY SOIL GAS LOCATIONS ARE BASED ON FIELD MEASUREMENTS AND ARE APPROXIMATE.
4. LOCATION OF MONITORING WELLS, PIEZOMETERS, DEPRESSURIZATION WELLS AND VACUUM MONITORING WELLS BASED ON MULTIPLE SURVEYS PROVIDED BY NELSON & POPE ENGINEERS AND SURVEYORS.

EXPLANATION

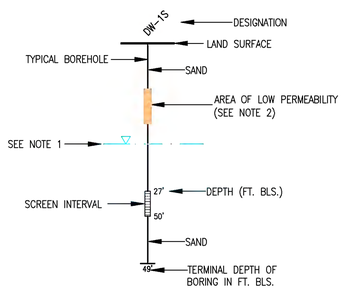

DEFINITIONS:
FT. BLS. – FEET BELOW LAND SURFACE

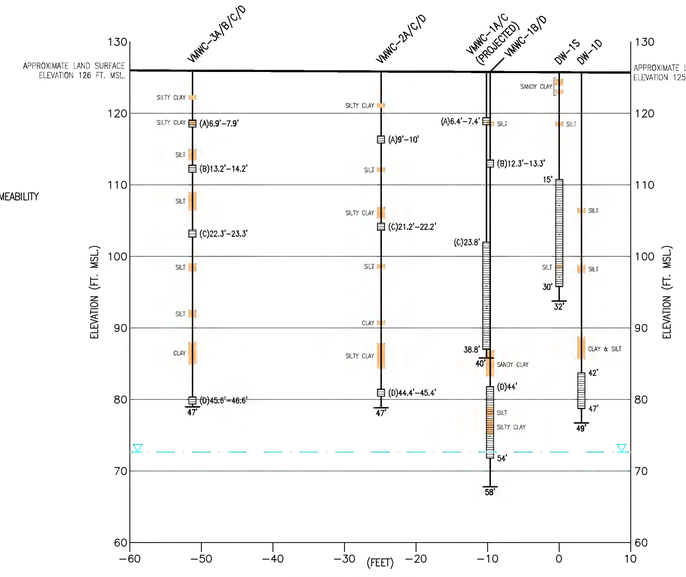

CROSS–SECTION A–A

HORIZONTAL SCALE: 1"=10'
VERTICAL SCALE: 1"= 10'

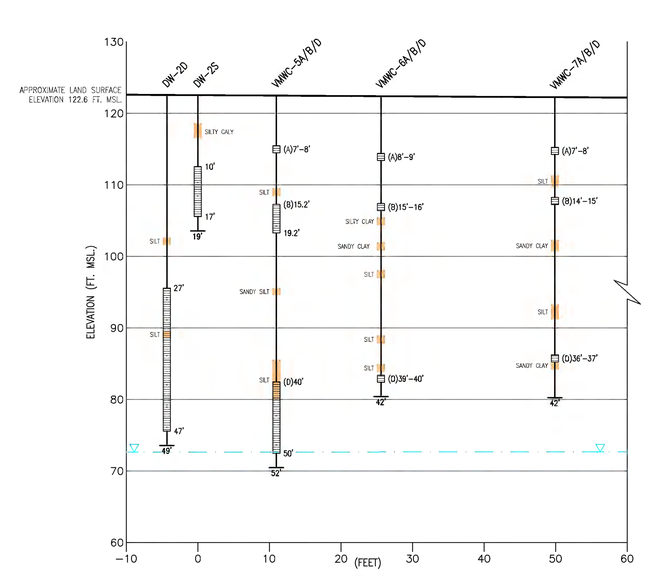

CROSS–SECTION B–B

HORIZONTAL SCALE: 1"=10'
VERTICAL SCALE: 1"= 10'

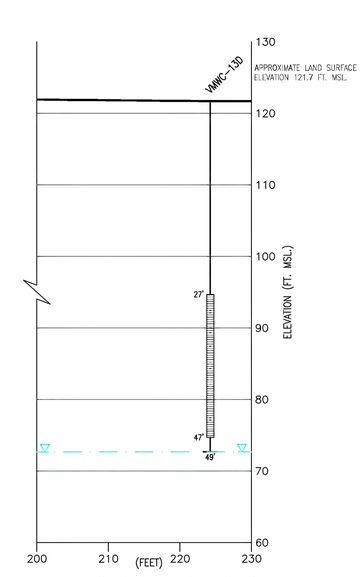

CROSS–SECTION C–C

HORIZONTAL SCALE: 1"=10'
VERTICAL SCALE: 1"= 10'

© 2007 ARCADIS OF NEW YORK, INC.

NO.	ISSUED DATE	REVISION DESCRIPTION	BY/CKD
0	9/2007	95% DESIGN SUBMITTAL	PR

ARCADIS OF NEW YORK, INC.
Two Huntington Quadrangle
Suite 1S10
Melville, NY 11747
Tel: 631-249-7600 Fax: 631-249-7610
www.arcadis-us.com

NORTHROP GRUMMAN OPERABLE UNIT 3
SOIL GAS REMEDIAL MEASURE
FORMER GRUMMAN SETTLING PONDS
BETHPAGE, NEW YORK

PROJECT MANAGER	DEPARTMENT MANAGER	LEAD DESIGN PROF.	CHECKED BY
C. SAN GIOVANNI	M. WOLFERT	C. TUOHY	K. ZEGEL
FORMER PLANT 24 SOUTHERN ACCESS ROAD PNEUMATIC CONDUCTIVITY TEST LOCATIONS AND WELL CONFIGURATIONS		TASK/PHASE NUMBER 00002	DRAWN BY A. SANCHEZ
		PROJECT NUMBER NY001464.1407	DRAWING NUMBER A-1

Acad Version : R17.0s (LMS Tech) User Name : alberdez
Date\Time : Fri, 07 Sep 2007 – 3:51pm Path\Name : G:\APROJECT\Northrop Grumman\Superfund\2007\OU3\W001464.1407 VCS IRM\VCS Desig-Const\95% Design\Cadd\DEC_95% Submittal\A-PDX A-1_S Access Rd.dwg
Current Plotstyle : ByColor Layout Tab: Layout1

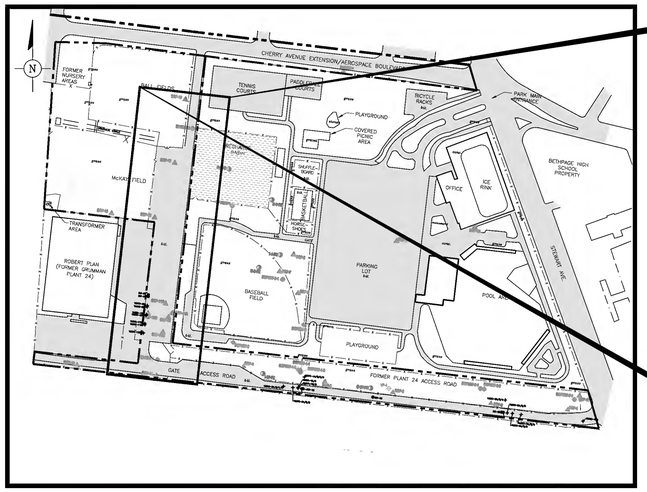

SITE PLAN

0 200' 400'

SCALE IN FEET

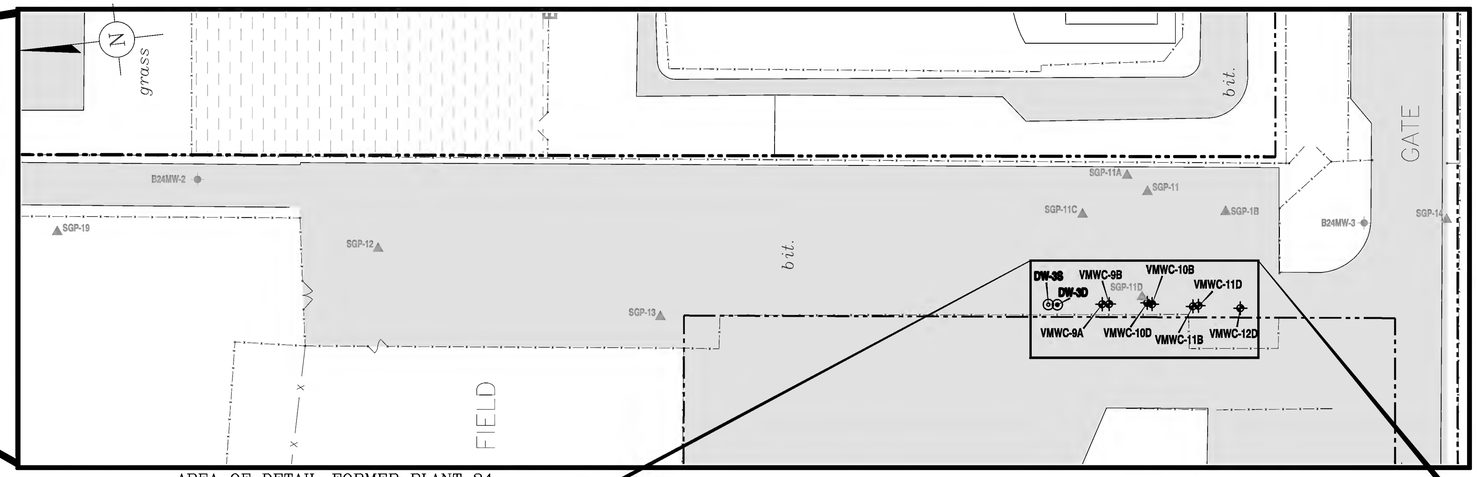

AREA OF DETAIL–FORMER PLANT 24
WESTERN ACCESS ROAD

0 40' 80'

SCALE IN FEET

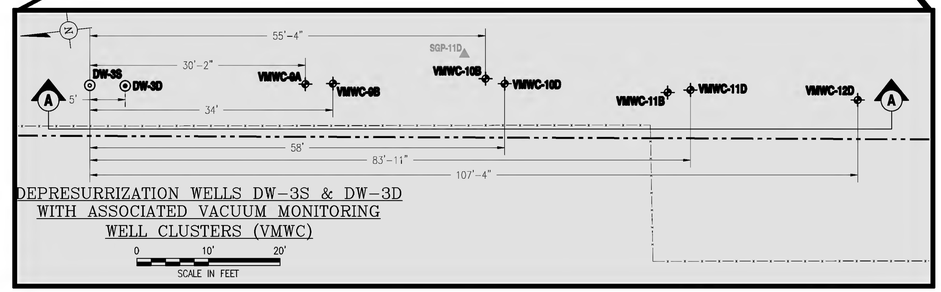

DEPRESSURIZATION WELLS DW–3S & DW–3D
WITH ASSOCIATED VACUUM MONITORING
WELL CLUSTERS (VMWC)

0 10' 20'

SCALE IN FEET

LEGEND:

- NORTHROP GRUMMAN PROPERTY LINE
- FENCE
- LIMITS OF BETHPAGE HIGH SCHOOL MAIN BUILDING
- bit. — BITUMINOUS PAVEMENT
- SGP-11 — TEMPORARY SOIL GAS POINT INSTALLED DURING OU–3 REMEDIAL INVESTIGATION
- BCP-MW-4-2 — MONITORING WELLS
- O-97-PZ — PIEZOMETER
- VP-4 — VERTICAL PROFILE BORING (VP)
- DW-3S — SHALLOW DEPRESSURIZATION WELL (DW–S)
- DW-3D — DEEP DEPRESSURIZATION WELL (DW–D)
- VMWC-9A — VACUUM MONITORING WELL CLUSTER (VMWC)

NOTES:

1. WATER TABLE ESTIMATE WAS OBTAINED DURING PNEUMATIC CONDUCTIVITY TEST FROM B24MW–3 ON JUNE 13, 2007.
2. LOW PERMEABILITY ZONES (CLAY, SILT, SILTY CLAY AND SANDY CLAY) WITH A THICKNESS GREATER THAN 6–INCHES ARE SHOWN.
3. TEMPORARY SOIL GAS LOCATIONS ARE BASED ON FIELD MEASUREMENTS AND ARE APPROXIMATE.
4. LOCATION OF MONITORING WELLS, PIEZOMETERS, DEPRESSURIZATION WELLS AND VACUUM MONITORING WELLS BASED ON MULTIPLE SURVEYS PROVIDED BY NELSON & POPE ENGINEERS AND SURVEYORS.

EXPLANATION

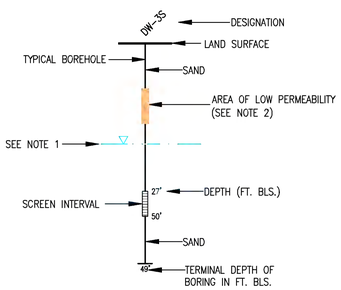

DEFINITIONS:
FT. BLS. – FEET BELOW LAND SURFACE

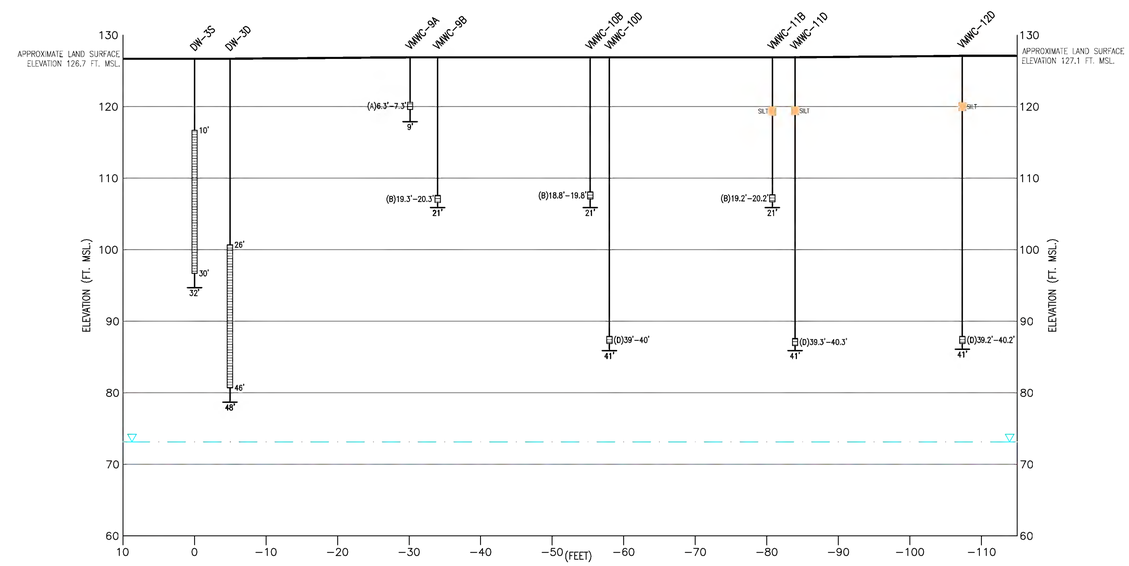

CROSS–SECTION A–A

HORIZONTAL SCALE: 1"=10'
VERTICAL SCALE: 1"= 10'

© 2007 ARCADIS OF NEW YORK, INC.

NO.	ISSUED DATE	REVISION DESCRIPTION	BY/CKD

ARCADIS OF NEW YORK, INC.
Two Huntington Quadrangle
Suite 1S10
Melville, NY 11747
Tel: 631-249-7600 Fax: 631-249-7610
www.arcadis-us.com

NORTHROP GRUMMAN OPERABLE UNIT 3
SOIL GAS REMEDIAL MEASURE
FORMER GRUMMAN SETTLING PONDS
BETHPAGE, NEW YORK

FORMER PLANT 24
WESTERN ACCESS ROAD
PNEUMATIC CONDUCTIVITY TEST
LOCATIONS AND WELL CONFIGURATIONS

PROJECT MANAGER	DEPARTMENT MANAGER	LEAD DESIGN PROF.	CHECKED BY
C. SAN GIOVANNI	M. WOLFERT	C. TUOHY	K. ZEGEL
		TASK/PHASE NUMBER 00002	DRAWN BY A. SANCHEZ
		PROJECT NUMBER NY001464.1407	DRAWING NUMBER A-2

Current Plotstyle : ByColor
Date\Time : Fri, 07 Sep 2007 – 3:52pm
Path\Name : G:\APROJECT\Northrop Grumman\Superfund\2007\JUL\NY001464.1407 VCS IRM\VCS Desig-Const\95% Design\Cadd\DSC_95% submittal\A-2.dwg
Acad Version : R17.0s (LMS Tech)
User Name : alsanchez

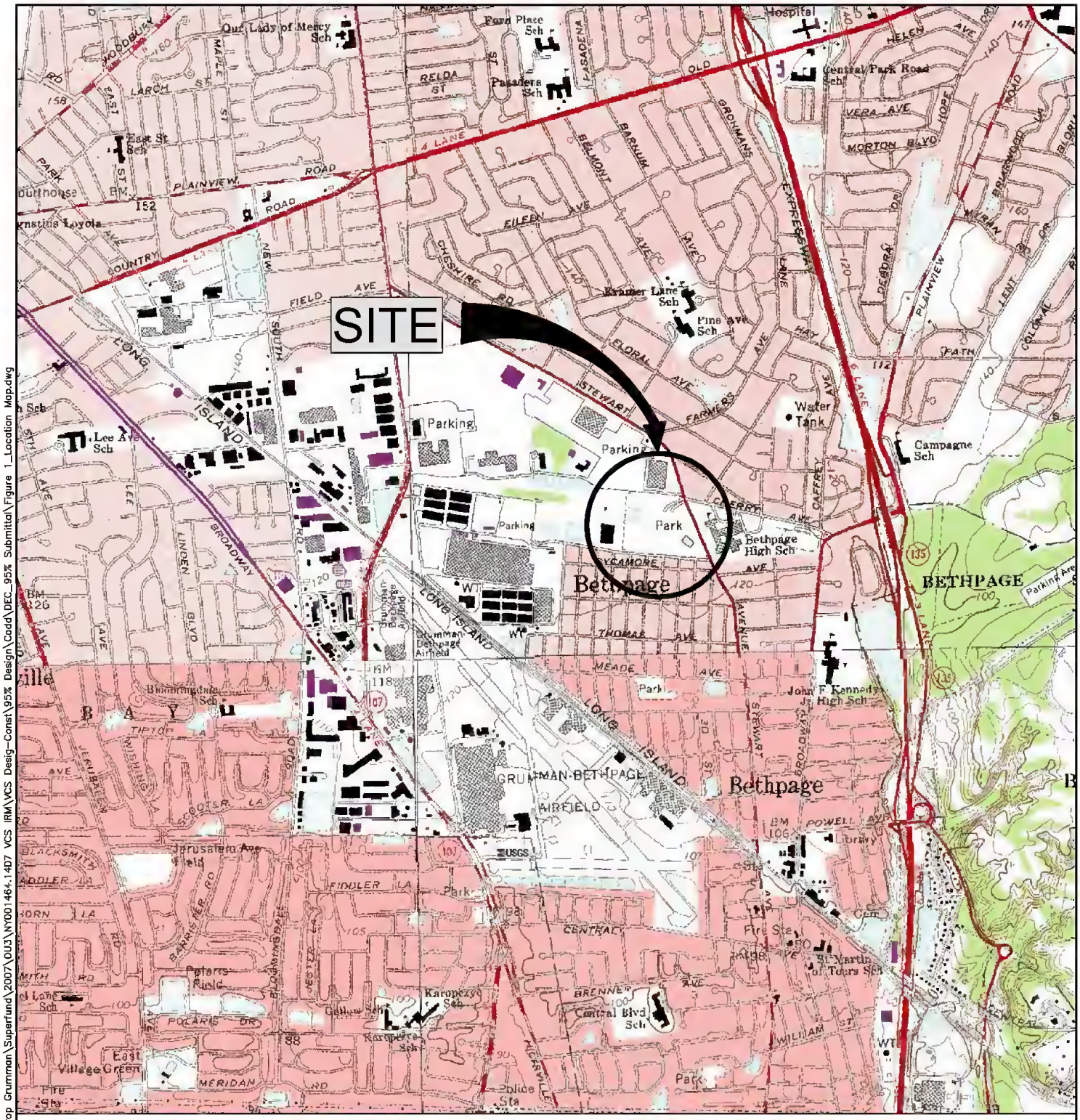

QUADRANGLE LOCATION

0 2000' 4000'

SCALE IN FEET

SOURCE:
USGS 7.5 MIN. AMITYVILLE QUADRANGLE, AMITYVILLE, NY. 1994
USGS 7.5 MIN. FREEPORT QUADRANGLE, FREEPORT, NY., 1994
USGS 7.5 MIN. HICKSVILLE QUADRANGLE, NICKSVILLE, NY., 1967, PHOTOREVISED 1979
USGS 7.5 MIN. HUNTINGTON QUADRANGLE, NUNTINGTON, NY. 1967, PHOTOREVISED 1979

ARCADIS OF NEW YORK, INC.
Two Huntington Quadrangle
Suite 1S10, Melville, NY 11747
Tel: 631-249-7600 Fax: 631-249-7610
www.arcadis-us.com

PROJECT MANAGER	DEPARTMENT MANAGER	LEAD DESIGN PROF.	CHECKED BY
C. SAN GIOVANNI	C. TUOHY	C. TUOHY	K. ZEGEL
		TASK/PHASE NUMBER 00004	DRAWN BY A. SANCHEZ
SITE LOCATION MAP		PROJECT NUMBER NY001464.1407	FIGURE 1

© 2007 ARCADIS OF NEW YORK, INC.

Acad Version : R17.0s (LMS Tech)
User Name : alsanchez
Path\Name : G:\APROJECT\Northrop Grumman\Superfund\2007\OU3\NY001464.1407 VCS IRM\VCS Desig-Const\95% Design\Cadd\DEC_95% Submittal\Figure 1_Location Map.dwg
Date\Time : Fri, 07 Sep 2007 – 11:09am

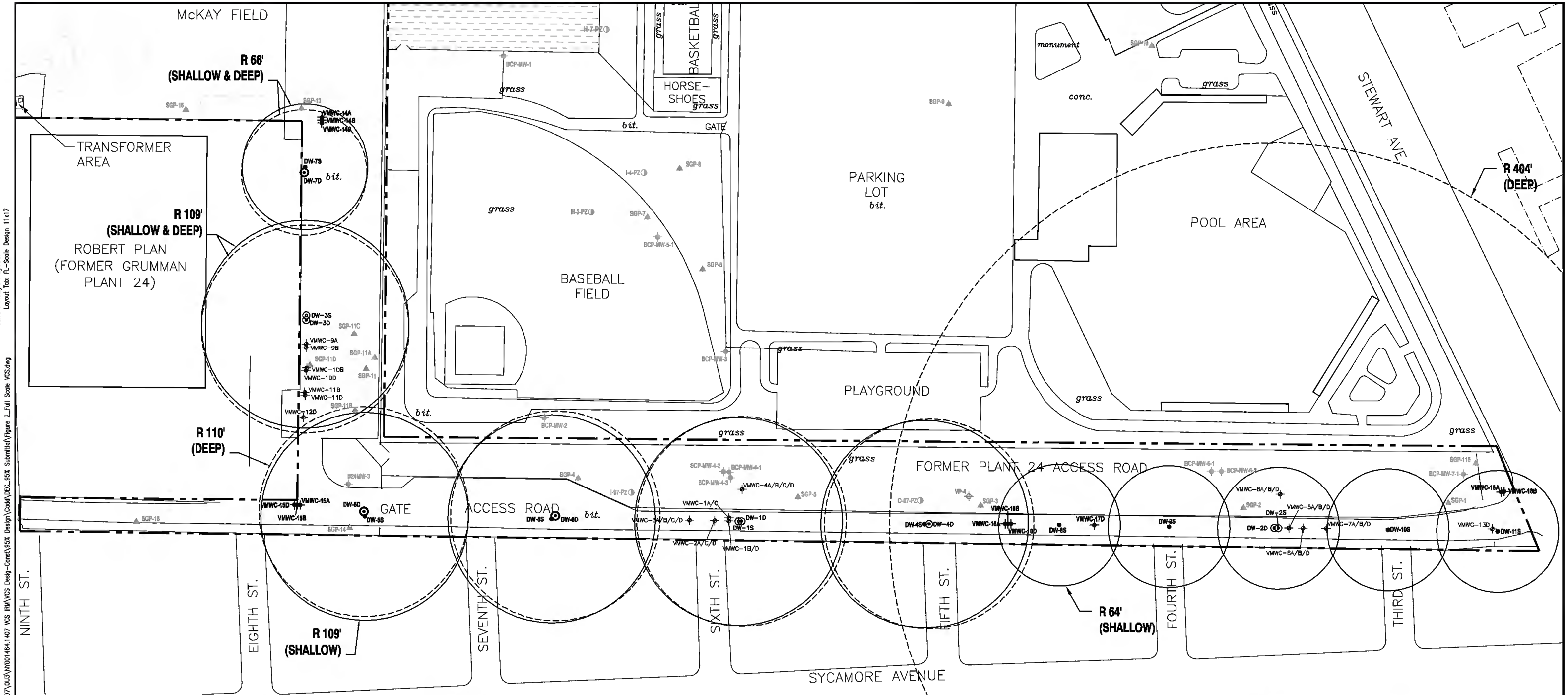

LEGEND:

bit.	BITUMINOUS PAVEMENT
	NORTHROP GRUMMAN PROPERTY LINE
	FENCE
	LIMITS OF BETHPAGE HIGH SCHOOL MAIN BUILDING
	SHALLOW RADIUS OF INFLUENCE
	DEEP RADIUS OF INFLUENCE
SGP-1	TEMPORARY SOIL GAS POINT INSTALLED OURING OU-3 REMEDIAL INVESTIGATION
BCP-MW-4-2	MONITORING WELLS
O-97-PZ	PIEZOMETER
VP-4	VERTICAL PROFILE BORING
VMWC-5A/B/D	VACUUM MONITORING WELL CLUSTER (VMWC)
DW-2S	SHALLOW DEPRESSURIZATION WELL (DW-S)
DW-1D	DEEP DEPRESSURIZATION WELL (DW-D)
VMWC-14A	PROPOSED VMWC
DW-10S	PROPOSED FULL SCALE SHALLOW DEPRESSURIZATION WELL
DW-7D	PROPOSED FULL SCALE DEEP DEPRESSURIZATION WELL

NOTES:

1. TEMPORARY SOIL GAS LOCATIONS ARE BASED ON FIELD MEASUREMENTS AND ARE APPROXIMATE.
2. LOCATION OF MONITORING WELLS, PIEZOMETERS, DEPRESSURIZATION WELLS AND VACUUM MONITORING WELLS BASED ON MULTIPLE SURVEYS PROVIDED BY NELSON & POPE ENGINEERS AND SURVEYORS.

© 2007 ARCADIS OF NEW YORK, INC.

NO.	ISSUED DATE	REVISION DESCRIPTION	BY/CKD
0	9/2007	95% DESIGN SUBMITTAL	PR

KEYPLAN

SEAL

ARCADIS OF NEW YORK, INC.
Two Huntington Quadrangle
Suite 1S10
Melville, NY 11747
Tel: 631-249-7606 Fax: 631-249-7610
www.arcadis-us.com

NORTHROP GRUMMAN OPERABLE UNIT 3
SOIL GAS REMEDIAL MEASURE
FORMER GRUMMAN SETTLING PONDS
BETHPAGE, NEW YORK

PROJECT MANAGER	DEPARTMENT MANAGER	LEAD DESIGN PROF.	CHECKED BY
C. SAN GIOVANNI	C. TUOHY	C. TUOHY	K. ZEGEL
		TASK/PHASE NUMBER 00004	DRAWN BY A. SANCHEZ
RADIUS OF INFLUENCE FOR SOIL GAS DEPRESSURIZATION SYSTEM		PROJECT NUMBER NY001464.1407	FIGURE 2

ACAD VERSION : R14.0S (LMS) (ecrt) LAYOUT TITLE : FIG. 02 / 2ND_ADAV - 1:1 (1:1)
User Name : alsanchez Path\Name : G:_PROJECT\Northrop Grumman\Superfund\2007\OU3\NY001464.1407 VCS IRM\VCS Desig-Const\95% Design\Cadd\DEC_95% Submittal\Figure 2_Full Scale VCS.dwg
Layout Tab: FL-Scale Design 11x17