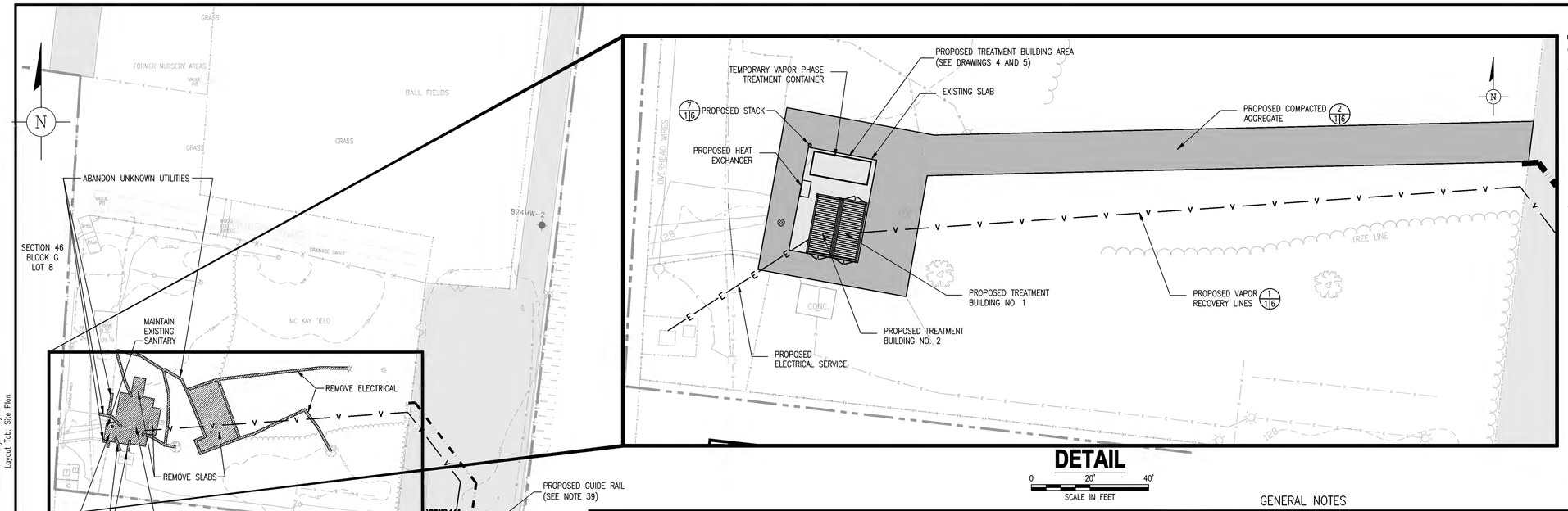

DETAIL

LEGEND

- PROPERTY LINE NORTHROP GRUMMAN
- EXISTING WATER MAIN
- UNKNOWN EXISTING UNDERGROUND UTILITY
- EXISTING GAS LINE
- EXISTING SANITARY LINE
- EXISTING UNDERGROUND ELECTRIC LINE
- EXISTING TELEPHONE LINE
- EXISTING 6' CHAIN LINK FENCE
- EXISTING CONTOUR ELEVATION
- EXISTING CONCRETE CURB
- EXISTING DROP CURB
- EXISTING MONITORING WELLS
- EXISTING PIEZOMETER
- FORMER RI SOIL BORING LOCATION
- EXISTING GUIDE RAIL
- UTILITY POLE
- LIGHT POLE
- HYDRANT
- WATER VALVE
- WATER METER
- LIMITS OF WOODED AREA
- TRANSFORMER
- EXISTING PAVED AREA
- VMWC-5A/B/D — EXISTING VACUUM MONITORING WELL CLUSTER (VMWC)
- VMWC-18A — PROPOSED VMWC
- DW-2S — EXISTING SHALLOW DEPRESSURIZATION WELL (DW-S)
- DW-1D — EXISTING DEEP DEPRESSURIZATION WELL (DW-D)
- DW-10S — PROPOSED FULL SCALE SHALLOW DEPRESSURIZATION WELL
- DW-7D — PROPOSED FULL SCALE DEEP DEPRESSURIZATION WELL
- PROPOSED VAPOR RECOVERY LINES
- PROPOSED WATER LINE
- PROPOSED ELECTRIC LINE
- PROPOSED TELEPHONE LINE
- PROPOSED GUIDE RAIL
- ITEM TO BE DEMOLISHED/ABANDONED
- PROPOSED GRAVEL AREA

DETAIL/SECTION DESIGNATION (1/16)
DRAWING NUMBER WHERE DETAIL/SECTION IS SHOWN
DRAWING NUMBER WHERE DETAIL/SECTION IS CALLED FROM

GENERAL NOTES

1. LOCATION OF WORK: ALL WORK DESCRIBED IN THESE DRAWINGS/SPECIFICATIONS SHALL BE PERFORMED ON BEHALF OF NORTHROP GRUMMAN SYSTEMS CORPORATION, INC.
2. THE CONTRACTOR SHOULD VISIT THE SITE AND EXAMINE ALL OF THE PHYSICAL CONDITIONS THAT AFFECT THE FINAL BID PRICE.
3. THE CONTRACTOR SHALL OBTAIN ALL NECESSARY FIELD MEASUREMENTS TO VERIFY THE ABILITY TO EXECUTE THE WORK IN ACCORDANCE WITH THIS SCOPE OF WORK AND DRAWINGS. NO ADDITIONS OR REVISIONS TO THE BID OR CONTRACT PRICE WILL BE PERMITTED BASED ON EXISTING CONDITIONS.
4. THE CONTRACTOR SHALL PROVIDE ALL LABOR, MATERIAL, AND EQUIPMENT, UNLESS OTHERWISE STATED, NECESSARY TO PERFORM THIS WORK.
5. THE CONTRACTOR SHALL BE RESPONSIBLE FOR OBTAINING ALL TRADE PERMITS, AND APPROVALS NECESSARY TO PERFORM THIS WORK.
6. ALL INFORMATION PRESENTED IN THIS REQUEST REGARDING THE SITE IS CONFIDENTIAL.
7. WHILE CONSTRUCTION ACTIVITIES ARE UNDER WAY AT LEAST ONE CONTRACTOR, FOREMAN, OR CREW SUPERVISOR SHALL BE PRESENT AT THE JOB SITE AT ALL TIMES.
8. THE CONTRACTOR SHALL SEGREGATE ALL EXCAVATED/DEMOLITION MATERIALS INTO TWO CATEGORIES: CONCRETE/ASPHALT/METAL MATERIAL AND SOIL MATERIAL. CONCRETE/ASPHALT/METAL MATERIAL SHALL BE DISPOSED OF BY CONTRACTOR. SOIL MATERIAL WILL BE CHARACTERIZED AND DISPOSED OF BY THE CONTRACTOR IN ACCORDANCE WITH THE SPECIFICATIONS ON DRAWING 2 AND ALL FEDERAL, STATE AND LOCAL REGULATIONS.
9. CONTRACTOR IS RESPONSIBLE FOR LOCATING AND VERIFYING LOCATION OF ALL UTILITIES WITHIN AREA AFFECTED BY CONSTRUCTION. COPIES OF PRINTS OBTAINED OR LOCATIONS PROVIDED TO CONTRACTOR WITH RESPECT TO UTILITIES SHALL BE SUPPLIED TO THE ENGINEER WITH A RECORD SET OF DRAWINGS AT COMPLETION OF CONSTRUCTION. IF A CONFLICT EXISTS BETWEEN THE UTILITY LOCATION AND THE CONSTRUCTION DRAWINGS, CONTRACTOR IS TO NOTIFY THE ENGINEER IMMEDIATELY SO THAT THE CONFLICT MAY BE RESOLVED.
10. CONTRACTOR IS RESPONSIBLE FOR PROVIDING THE ENGINEER WITH ALL INFORMATION REQUIRED TO COMPLETE A SET OF "RECORD" DRAWINGS BY KEEPING A RECORD SET OF DAILY PROGRESSION OF WORK.
11. UNLESS OTHERWISE NOTED, ALL AREAS DISTURBED BY THIS WORK SHALL BE RESTORED TO ORIGINAL CONDITION.
12. CONTRACTOR TO PROTECT AND PRESERVE ALL EXISTING FEATURES (I.E. MONITORING WELLS, EQUIPMENT, ETC.) WITHIN AREAS AFFECTED BY CONSTRUCTION. DAMAGE SUSTAINED TO AN EXISTING FEATURE WILL BE REPAIRED/REPLACED AT CONTRACTOR'S EXPENSE.
13. THE CONTRACTOR SHALL PERFORM ALL WORK IN ACCORDANCE WITH ALL COUNTY, LOCAL, STATE, AND FEDERAL REGULATIONS, INCLUDING, BUT NOT LIMITED TO, ALL APPLICABLE LOCAL, STATE, AND/OR FEDERAL (OSHA, USEPA, AND DOT, ETC.) RULES AND REGULATIONS.
14. UNLESS OTHERWISE INDICATED HEREIN, ALL MATERIALS AND EQUIPMENT FURNISHED UNDER THIS CONTRACT SHALL BE NEW, FREE FROM DEFECTS, AND SHALL BE GUARANTEED FOR A PERIOD OF AT LEAST ONE YEAR FROM THE DATE OF ACCEPTANCE OF THE WORK. THE CONTRACTOR SHALL FURNISH, AT NO COST TO THE ENGINEER, ALL LABOR AND MATERIALS NECESSARY TO CORRECT PROBLEMS DUE TO FAULTY WORKMANSHIP OR MATERIALS.
15. OTHER CONSTRUCTION ACTIVITIES MAY BE TAKING PLACE CONCURRENTLY WITH THIS PROJECT. THE CONTRACTOR SHALL CONSULT WITH THE VARIOUS PARTIES AND SHALL COORDINATE SCHEDULES.
16. THE INFORMATION SHOWN ON THE DRAWINGS CONCERNING TYPE AND LOCATION OF UNDERGROUND UTILITIES IS NOT GUARANTEED TO BE ACCURATE OR ALL INCLUSIVE. THE CONTRACTOR IS RESPONSIBLE FOR MAKING HIS OWN DETERMINATIONS AS TO THE TYPE AND LOCATION OF UNDERGROUND UTILITIES AS MAY BE NECESSARY TO AVOID DAMAGE THERETO.
17. TRENCHING WILL BE PERFORMED IN AREAS WHERE VEHICULAR TRAFFIC MAY BE PRESENT. THE CONTRACTOR(S) SHALL NOTIFY THE TOWN OF OYSTER BAY HIGHWAY DEPARTMENT AND ENGINEER OF THE PROPOSED START OF WORK WITHIN THESE TRAFFIC AREAS A MINIMUM OF 48 HOURS PRIOR TO THE START OF THE WORK. FURTHERMORE, THE CONTRACTOR WILL PERFORM THIS WORK IN A MANNER TO ALLOW FOR MINIMAL DISRUPTION TO TRAFFIC. THIS WILL INCLUDE PERFORMING WORK IN ACCORDANCE WITH TOWN OF OYSTER BAY HIGHWAY DEPARTMENT REQUIREMENTS IN SECTIONS AND/OR PROVIDING TRAFFIC PLATES TO ALLOW TRENCH SECTIONS TO BE DRIVEN OVER. TRAFFIC CONTROLS SHALL BE PROVIDED AS REQUIRED BY TOWN OF OYSTER BAY HIGHWAY DEPARTMENT REQUIREMENTS.
18. PIPE ROUTING SHOWN FOR CONSTRUCTION LAYOUT PURPOSES ONLY. ACTUAL ROUTING TO BE FIELD DETERMINED AND IS SUBJECT TO ENGINEER'S APPROVAL.
19. CONTRACTOR SHALL EXTEND ALL PROCESS PIPING AND MAKE ALL NECESSARY CONNECTIONS TO WELL VAULTS.
20. ALL PIPING PRESSURE TESTS SHALL BE MADE BY THE CONTRACTOR IN THE PRESENCE OF THE ENGINEER.
21. THE CONTRACTOR SHALL PROVIDE ALL PRODUCTS AND PROPERLY CALIBRATED TESTING EQUIPMENT REQUIRED TO PERFORM THE PIPING PRESSURE TESTING WORK.
22. TESTS MAY BE PERFORMED ON SEPARATE SECTIONS OF PIPING TO EXPEDITE CONSTRUCTION. THE CONTRACTOR SHALL NOT PERFORM PRESSURE TESTING AGAINST SYSTEM VALVES. VAPOR RECOVERY LINE SECTIONS SHALL BE PNEUMATICALLY TESTED AT 50 PSI FOR ONE HOUR.
23. AFTER THE INITIAL PRESSURE TEST ON PIPING IS COMPLETED SUCCESSFULLY, THE CONTRACTOR SHALL BACKFILL THE TRENCHES AS SPECIFIED.
24. EXCAVATIONS SHALL BE KEPT FREE FROM STANDING WATER.
25. CONTRACTOR SHALL NOTIFY THE ENGINEER AT THE COMPLETION OF EXCAVATIONS AND TRENCHING TO ALLOW FOR INSPECTIONS.
26. CONTRACTOR SHALL PROVIDE APPROPRIATE SAFETY BARRICADES AROUND TRENCHING AND EXCAVATION TO PREVENT ACCIDENTS OR UNAUTHORIZED ENTRY.
27. BACKFILL OF TRENCHES IN UNPAVED AREAS WILL BE APPLIED IN 1-FOOT COMPACTED LIFTS SUCH THAT A MINIMUM 90% PROCTOR DENSITY IS ACHIEVED (95% MODIFIED PROCTOR DENSITY SHALL BE ACHIEVED IN PAVED AREAS AND UNDER TREATMENT BUILDING FOUNDATIONS).
28. CONTRACTOR'S FILL SOURCE MUST BE TESTED BY CONTRACTOR AND APPROVED BY THE ENGINEER PRIOR TO COMMENCING THE WORK AND/OR PLACING THE MATERIAL.
29. EXCAVATIONS WILL BE BACKFILLED AS PROMPTLY AS WORK PERMITS ONCE REQUIRED INSPECTIONS HAVE BEEN COMPLETED.
30. DO NOT PLACE MATERIALS ON SURFACES THAT ARE MUDDY, FROZEN, OR CONTAIN ICE OR FROST.
31. CONTRACTOR SHALL PLACE A STRIP(S) OF UTILITY WARNING TAPE SPACED AT 18 INCHES ON CENTER IN ALL TRENCHED AREAS. THIS TAPE SHALL CONTAIN A WIRE FOR METAL DETECTION OR HAVE AN ALUMINUM CORE. TAPE SHALL BE PLACED AT A DEPTH OF 6 INCHES IN NON-PAVED AREAS AND BELOW THE SUBBASE IN PAVED AREAS.
32. ALL CONCRETE AND PAVEMENT CUTS ARE TO BE SMOOTH EDGE SAW CUTS BY CIRCULAR SAW BLADES.
33. SURVEY NOTE: MAP FEATURES BASED ON SURVEY PREPARED BY NELSON & POPE ENGINEERS AND SURVEYORS, "EXISTING TOPOGRAPHY", DATED 4-19-07.
34. LOCATION OF MONITORING WELLS, PIEZOMETERS, DEPRESSURIZATION WELLS AND VACUUM MONITORING WELLS BASED ON MULTIPLE SURVEYS PROVIDED BY NELSON & POPE ENGINEERS AND SURVEYORS.
35. EXISTING FEATURES ON PARK AND OFF-SITE ARE BASED ON AERIAL PHOTOGRAPHY AND ARE APPROXIMATE.
36. ALL PAVED AREAS ALONG SOUTHERN ACCESS ROAD TO BE RESTORED. THE INDICATED AREA ALONG THE WESTERN LEG OF THE ACCESS ROAD IS TO BE RESTORED. THE DISTURBED AREA PROTECTED BY THE GUIDE RAIL SHOULD RECEIVE COMPACTED AGGREGATED AS SHOWN.
37. ALL DEPRESSURIZATION LINES SHALL BE CLEANED OUT WITH POTABLE WATER PRIOR TO PRESSURE TESTING UNDER THE DIRECTION OF THE ENGINEER.
38. SPARE DEPRESSURIZATION PIPES TO BE CAPPED AT TERMINATION POINT. FINAL LOCATIONS AND CAPPING METHOD TO BE APPROVED BY ENGINEER.
39. GUIDE RAIL TO BE PROVIDED IN ACCORDANCE WITH NEW YORK STATE DEPARTMENT OF TRANSPORTATION REGULATIONS. CONTRACTOR SHALL PROVIDE SUBMITTAL TO BE APPPROVED BY ENGINEER.

ZONING NOTES:

SECTION 46 BLOCK G, LOT 92 LIE WITHIN THE TOWN OF OYSTER BAY AND ARE ZONED "GB" GENERAL BUISNESS.

THE FOLLOWING IS A PARTIAL LISTING OF ZONING REQUIREMENTS PRINTED IN THE CODE OF THE TOWN OF OYSTER BAY:

MAXIMUM LOT WIDTH/FRONTAGE:	40 FEET
MAXIMUM BUILDING COVERAGE:	80%
MINIMUM FRONT YARD SETBACK:	10 FEET
MINIMUM REAR YARD SETBACK:	20 FEET
MAXIMUM BUILDING HEIGHT:	35 FEET

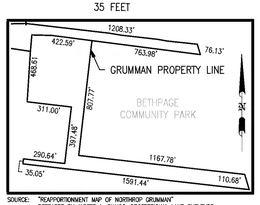

SOURCE: "REAPPORTIONMENT MAP OF NORTHROP GRUMMAN", PREPARED BY ALBERT A. BIANCO, PROFESSIONAL LAND SURVEYOR, NOVEMBER 5, 2003.

© 2007 ARCADIS OF NEW YORK, INC.

DRAWING CONFIDENTIAL: THIS DRAWING AND ALL INFORMATION CONTAINED THEREON IS AND SHALL REMAIN THE PROPERTY OF ARCADIS OF NEW YORK, INC. AS AN INSTRUMENT OF PROFESSIONAL SERVICE. THIS INFORMATION SHALL NOT BE USED IN WHOLE OR IN PART WITHOUT THE FULL KNOWLEDGE AND PRIOR WRITTEN CONSENT OF ARCADIS OF NEW YORK, INC.

SCALE VERIFICATION
THIS BAR REPRESENTS ONE INCH ON THE ORIGINAL DRAWING:
USE TO VERIFY FIGURE REPRODUCTION SCALE

NO.	ISSUED DATE	REVISION DESCRIPTION	BY/CKD
1	9/2007	95% DESIGN SUBMITIAL	AS/KZ
0	7/2007	50 TO 75 % DESIGN SUBMITTAL	AS/KZ

KYRIACOS PIERIDES, PH.D., P.E.
N.Y. LIC. NO. 073670

ARCADIS OF NEW YORK, INC.
Two Huntington Quadrangle
Suite 1S10
Melville, NY 11747
Tel: 631-249-7600 Fax: 631-249-7610
www.arcadis-us.com

NORTHROP GRUMMAN OPERABLE UNIT 3
SOIL GAS INTERIM REMEDIAL MEASURE
FORMER GRUMMAN SETTLING PONDS
BETHPAGE, NEW YORK

SITE PLAN AND NOTES

PROJECT MANAGER	DEPARTMENT MANAGER	LEAD DESIGN PROF.	CHECKED BY
C. SAN GIOVANNI	C. TUOHY	C. TUOHY	K. ZEGEL
		TASK/PHASE NUMBER: 00004	DRAWN BY: A. SANCHEZ
		PROJECT NUMBER: NY001464.1407	DRAWING NUMBER: 1

Acad Version : R17.0s (LMS Tech) User Name : alsanchez
Date\Time : Fri, 07 Sep 2007 - 3:32pm Path\Name : G:\APROJECT\Northrop Grumman\Superfund\2007\OU3\NY001464.1407 VCS IRM\VCS Desig-Const\95% Design\Cadd\DEC_95% Submittal\01_Site Plan & Notes.dwg
Current Pstyle : ByColor Layout Tab: Site Plan

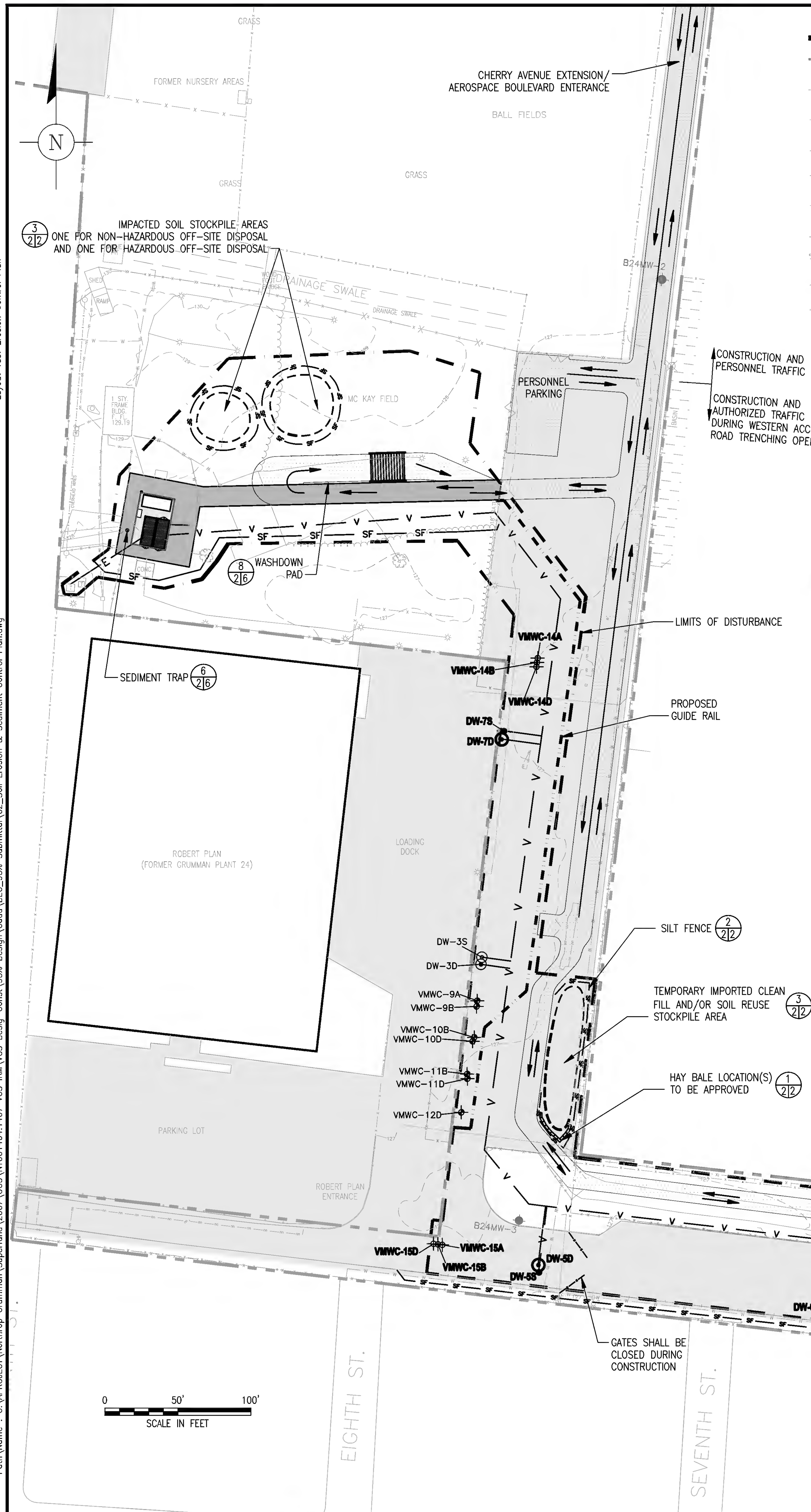

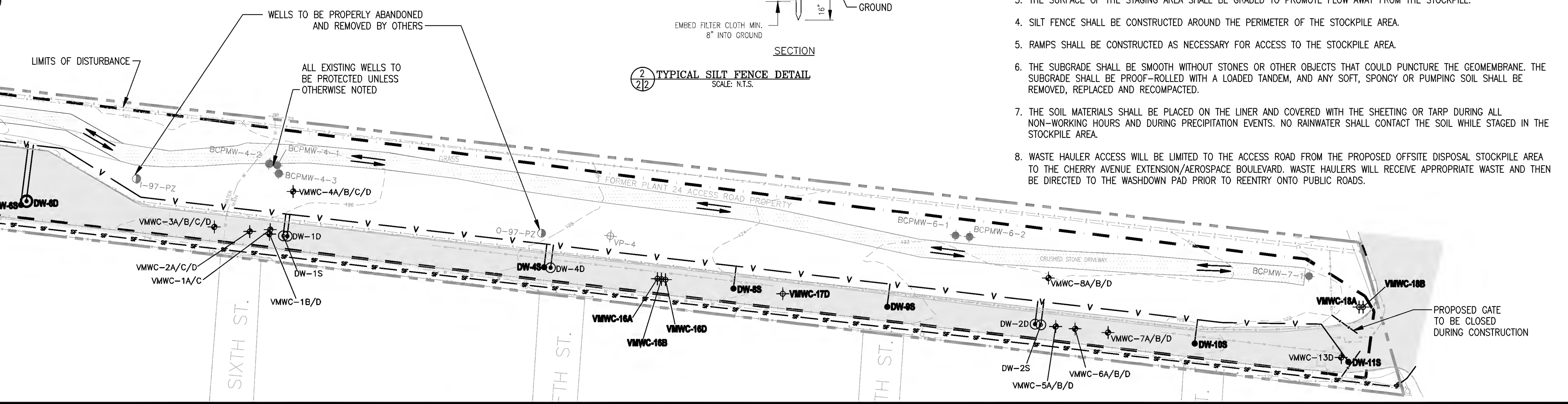

LEGEND

Symbol	Description	Symbol	Description
— · —	PROPERTY LINE NORTHROP GRUMMAN	VMWC-5A/B/D	EXISTING VACUUM MONITORING WELL CLUSTER (VMWC)
— W —	EXISTING WATER MAIN	VMWC-18A	PROPOSED VMWC
— U — U —	UNKNOWN EXISTING UNDERGROUND UTILITY	DW-2S	EXISTING SHALLOW DEPRESSURIZATION WELL (DW-S)
— G — G —	EXISTING GAS LINE	DW-1D	EXISTING DEEP DEPRESSURIZATION WELL (DW-D)
— S — S —	EXISTING SANITARY LINE	DW-10S	PROPOSED FULL SCALE SHALLOW DEPRESSURIZATION WELL
— E — E —	EXISTING UNDERGROUND ELECTRIC LINE	DW-7D	PROPOSED FULL SCALE DEEP DEPRESSURIZATION WELL
— X — X —	EXISTING 6' CHAIN LINK FENCE	— V —	PROPOSED VAPOR RECOVERY LINES
— 122 —	EXISTING CONTOUR ELEVATION	— W —	PROPOSED WATER LINE
	EXISTING CONCRETE CURB	— E —	PROPOSED ELECTRIC LINE
	EXISTING DROP CURB	— SF —	PROPOSED SILT FENCE
	EXISTING GUIDE RAIL		PROPOSED GUIDE RAIL
	EXISTING MONITORING WELLS		LIMITS OF DISTURBANCE
	EXISTING PIEZOMETER		ITEM TO BE DEMOLISHED/ ABANDONED
	UTILITY POLE		PROPOSED GRAVEL AREA
	LIGHT POLE		TRAFFIC ROUTE
	HYDRANT		TRAFFIC DIRECTION
	WATER VALVE		
W	WATER METER		
	LIMITS OF WOODED AREA		
T	TRANSFORMER		
	EXISTING PAVED AREA		

DETAIL/SECTION DESIGNATION
1/2|2
DRAWING NUMBER WHERE DETAIL/SECTION IS SHOWN
DRAWING NUMBER WHERE DETAIL/SECTION IS CALLED FROM

SEDIMENT AND EROSION CONTROL PLAN AND NOTES:

1. SEDIMENT AND EROSION CONTROL MEASURES ARE TO BE USED AS DIRECTED BY THE ENGINEER. ALL WORK SHALL BE IN ACCORDANCE WITH THE NEW YORK STANDARDS FOR EROSION AND SEDIMENT CONTROL.
2. ALL SOIL AND EROSION CONTROL MEASURES ARE TO BE INSPECTED AND, IF NECESSARY, REPAIRED AFTER EVERY MAJOR STORM EVENT, AND AS DIRECTED BY THE ENGINEER.
3. THE CONTRACTOR SHALL MAINTAIN AND KEEP FUNCTIONAL ALL DRAINAGE STRUCTURES IN THE VICINITY OF THE AREA OF DISTURBANCE OR DOWNGRADIENT OF THE AREA OF DISTURBANCE AND THOSE STRUCTURES WHERE CONTRACTOR HAS INSTALLED SEDIMENT & EROSION CONTROL MEASURES.
4. THE CONTRACTOR SHALL BE RESPONSIBLE FOR COMPLIANCE WITH THIS SEDIMENT AND EROSION CONTROL PLAN. ALL SEDIMENT AND EROSION CONTROL PRACTICES ARE TO BE INSTALLED PRIOR TO ANY MAJOR SOIL DISTURBANCES, OR IN THEIR PROPER SEQUENCE, AND MAINTAINED UNTIL PERMANENT PROTECTION IS ESTABLISHED.
5. ALL TOPSOIL NOT TO BE USED FOR FINAL GRADING SHALL BE REMOVED FROM THE SITE IMMEDIATELY. ALL TOPSOIL REQUIRED FOR FINAL GRADING AND STORED ON SITE SHALL BE LIMED, FERTILIZED, TEMPORARILY SEEDED, AND MULCHED (IF SEASON AND CLIMATE LOGICAL CONDITIONS WARRANT MULCHING) WITHIN FIVE (5) DAYS IN ACCORDANCE WITH THE NEW YORK STANDARDS FOR SOIL EROSION AND SEDIMENT CONTROL.
6. DURING CONSTRUCTION, EXCAVATED MATERIAL SHALL BE PILED ON THE UPHILL SIDE OF THE EXCAVATIONS AND/OR NORTHERN-SIDE OF ACCESS ROAD AWAY FROM ANY DRAINAGE DITCHES AND RESIDENTIAL AREAS. UNLESS OTHERWISE SPECIFIED OR DIRECTED, ALL EXCAVATIONS SHALL BE BACKFILLED IMMEDIATELY AFTER THE CONSTRUCTION HAS BEEN COMPLETED. EXCAVATIONS IN EARTH SHALL THEN RECEIVE TEMPORARY SEEDING AND MULCH AS PER THE REQUIREMENTS SPECIFIED. EXCAVATIONS IN PAVED AREAS SHALL IMMEDIATELY RECEIVE A TEMPORARY SURFACING OF STONE TO PREVENT THE ERODING OF THE EARTH AND WASHING OF THE EARTH INTO ANY DRAINS OR DRAINAGE DITCHES. ALL TOPSOIL NOT TO BE USED FOR BACKFILL AND NOT REMOVED FROM THE SITE WITHIN FIVE (5) DAYS SHALL BE LIMED, FERTILIZED, SEEDED, AND MULCHED AS SPECIFIED.
7. CONTRACTOR PARKING AND TRAFFIC SHALL BE LIMITED TO THE ROADWAY AREAS. WHERE CONSTRUCTION VEHICLES LEAVE PAVED AREAS, STABILIZED CONSTRUCTION ENTRANCES ARE TO BE CONSTRUCTED. CARE SHALL BE TAKEN TO MINIMIZE SEDIMENT TRANSPORT RESULTING FROM VEHICLE TRAFFIC.
8. AFTER THE PROJECT HAS BEEN COMPLETED, THE CONTRACTOR SHALL HAVE THE RESPONSIBILITY FOR INSURING THAT ALL PERMANENT SOIL EROSION AND SEDIMENT CONTROL MEASURES ARE IN PROPER WORKING CONDITION AND THAT ALL TEMPORARY SOIL EROSION AND SEDIMENT CONTROL MEASURES HAVE BEEN REMOVED OR REPLACED BY PERMANENT CONTROLS (REVEGETATION).
9. MAINTENANCE OF ALL SOIL EROSION AND SEDIMENT CONTROL MEASURES ON THE PROJECT SITE SHALL BE THE RESPONSIBILITY OF THE CONTRACTOR UNTIL ALL WORK UNDER THIS CONTRACT IS COMPLETE, THROUGH AND INCLUDING ALL GUARANTEE AND BOND PERIODS, AND HENCE FORTH THE RESPONSIBILITY OF THE OWNER.
10. PERMANENT VEGETATION SHALL BE SEEDED OR SODDED ON ALL EXPOSED AREAS WITHIN FIVE (5) DAYS AFTER FINAL GRADING. CONTRACTOR SHALL REPLACE AND MAINTAIN PERMANENT VEGETATION UNTIL SUCH TIME AS IT IS ACCEPTED BY THE ENGINEER. MULCH AS NECESSARY FOR SEED PROTECTION AND ESTABLISHMENT.
11. MAINTENANCE OF ALL SOIL EROSION AND SEDIMENT CONTROL MEASURES ON THE PROJECT SITE SHALL BE THE RESPONSIBILITY OF THE CONTRACTOR UNTIL ALL WORK UNDER THIS CONTRACT IS COMPLETE, THROUGH AND INCLUDING ALL GUARANTEE AND BOND PERIODS, AND HENCE FORTH THE RESPONSIBILITY OF THE OWNER.
12. WHEN TRENCH EXCAVATION IS LOCATED ADJACENT TO AN IMPOUNDMENT OR MANMADE CHANNEL, EXCAVATED MATERIAL SHALL BE STOCKPILED ON THE SIDE OF THE TRENCH OPPOSITE THE WATER COURSE, IN ORDER TO MINIMIZE SILTATION. IN ADDITION TO STOCKPILE LOCATION REQUIREMENTS FOR THESE AFOREMENTIONED WORK AREAS, A METHOD OF SILTATION CONTROL (SILT FENCING) SHALL ALSO BE EMPLOYED.
13. DITCHES WHICH ARE FILLED, OR PARTLY INOPERATIVE SHALL BE CLEANED AND MADE OPERATIVE BEFORE THE CONTRACTOR STOPS WORK FOR ANY DAY, AND SHALL BE MAINTAINED IN A CONDITION SATISFACTORY TO THE OWNER FOR THE DURATION OF THE CONTRACT.
14. WATER FROM AGGREGATE WASHINGS, DECONTAMINATION, OR OTHER OPERATIONS SHALL BE TESTED THEN DISPOSED OF OFF-SITE IN ACCORDANCE WITH LOCAL, STATE AND FEDERAL LAWS.
15. POLLUTANTS SUCH AS FUELS, LUBRICANTS, BITUMENS, RAW SEWAGE, AND OTHER HARMFUL MATERIALS SHALL NOT BE DISCHARGED INTO OR NEAR IMPOUNDMENTS OR INTO NATURAL OR MANMADE CHANNELS. WASH WATER OR WASTE FROM CONCRETE MIXING OPERATIONS SHALL NOT BE ALLOWED TO ENTER ANY DRAINAGE STRUCTURES.
16. ALL APPLICABLE REGULATIONS OF FISH AND WILDLIFE AGENCIES AND STATUTES RELATING TO THE PREVENTION AND ABATEMENT OF POLLUTION SHALL BE COMPLIED WITH IN THE PERFORMANCE OF THE CONTRACT.
17. ANY MATERIAL GENERATED BY ANY ACTIVITY FOR THE DEVELOPMENT, MODIFICATION, AND CONSTRUCTION OF THE FACILITY SHALL NOT BE BURNED ON OR OFF THE CONTRACT SITE. THIS SHALL INCLUDE, BUT NOT BE LIMITED TO, LAND CLEARING MATERIAL AND DEMOLITION MATERIAL. SUCH MATERIAL SHALL HEREINAFTER BE REFERRED TO AS DISPOSABLE MATERIAL IN THE CLEARING AND GRUBBING OPERATION.
18. WHEN IT BECOMES NECESSARY, THE ENGINEER WILL INFORM THE CONTRACTOR OF UNSATISFACTORY CONSTRUCTION PROCEDURES AND OPERATIONS INSOFAR AS EROSION CONTROL, WATER, AND AIR POLLUTION ARE CONCERNED. IF THE UNSATISFACTORY CONSTRUCTION PROCEDURES AND OPERATIONS ARE NOT CORRECTED PROMPTLY, THE ENGINEER MAY SUSPEND THE PERFORMANCE OF ANY OR ALL OF OTHER CONSTRUCTION UNTIL THE UNSATISFACTORY CONDITION HAS BEEN CORRECTED.
19. PRE-CHARACTERIZATION AND HANDLING OF MATERIALS SHALL BE CONDUCTED IN ACCORDANCE WITH THE SOIL MANAGMENT PLAN.
20. ANY MATERIALS CHARACTERIZED ABOVE SOIL CLEAN UP OBJECTIVES FOR INDUSTRIAL SITES SHALL BE DISPOSED OF OFF-SITE, IN ACCORDANCE WITH STATE AND LOCAL REGULATIONS. MATERIALS SHALL BE REMOVED FROM THE SITE AS SOON AS POSSIBLE. TEMPORARY STAGING SHALL BE CONDUCTED IN DESIGNATED AREA ON McKAY FIELD.
21. ANY MATERIALS CHARACTERIZED BELOW SOIL CLEANUP OBJECTIVES SHALL BE REUSED AS FILL MATERIAL IN AREAS THAT WILL BE PAVED IN ACCORDANCE WITH SUBPART 375-6: REMEDIAL PROGRAM SOIL CLEANUP OBJECTIVES FOR INDUSTRIAL SITES. TEMPORARY STAGING SHALL BE CONDUCTED IN DESIGNATED AREA ON McKAY FIELD.
22. ANY TRENCHING AND/OR EARTHWORK ACTIVITIES SHALL BE LIMITED TO THE LIMITS OF DISTURBANCE.
23. CONTRACTOR SHALL PROTECT ALL TREES LOCATED IN OF NEAR LIMITS OF DISTURBANCE.
24. CONTRACTOR SHALL LOCATE AND PROTECT ALL MONITORING WELLS.
25. CONTRACTOR SHALL IMPLEMENT DUST SUPRESSION AND AIR MONITORING ACTIVITIES IN CONFORMANCE WITH THE COMMUNITY AIR MONITORING PLAN FOR THE SITE.
26. SEEDING SHALL BE APPLIED AS DIRECTED BY ENGINEER.
27. TRAFFIC SHALL BE LIMITED TO THE DESIGNATED ROUTES.
28. ALL CONSTRUCTION EQUIPMENT SHALL BE STORED WITHIN THE 6-FOOT FENCE AROUND MCKAY FIELD , WITH LOCKING GATES.

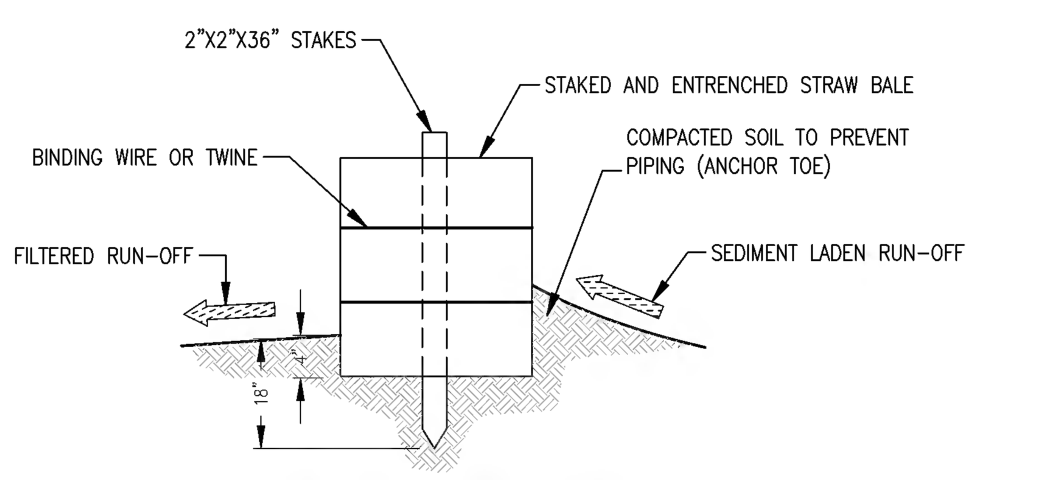

1/2|2 TYPICAL HAY BALE DETAIL
SCALE: N.T.S.

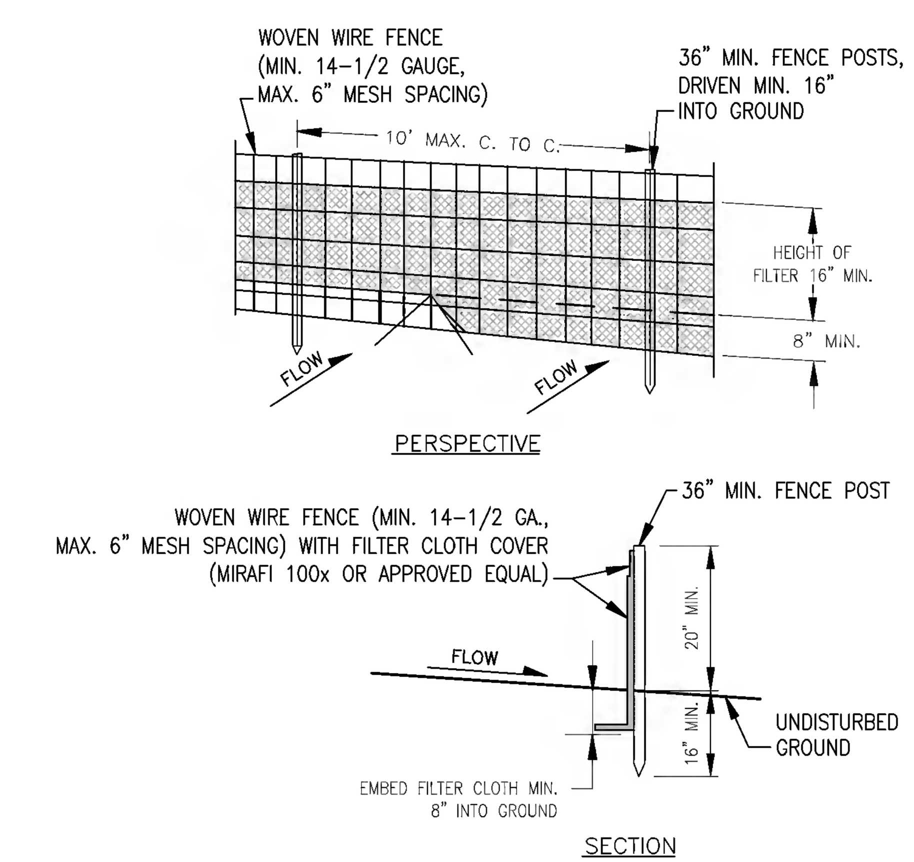

2/2|2 TYPICAL SILT FENCE DETAIL
SCALE: N.T.S.

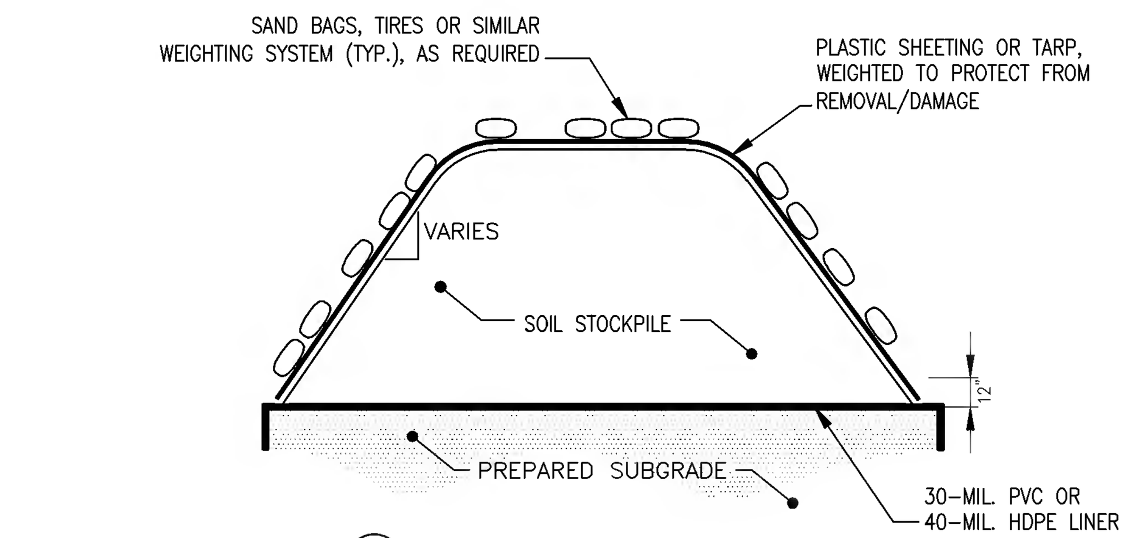

3/2|2 TYPICAL SOIL STOCKPILE DETAIL
SCALE: N.T.S.

NOTES:

1. THIS DETAIL APPLIES TO EXCAVATED SOIL MATERIAL FROM WITHIN THE LIMITS OF DISTURBANCE. THIS DETAIL IS NOT REQUIRED FOR IMPORTED FILL, AS APPROVED BY THE ENGINEER.
2. A 30-MIL PVC OR 40-MIL. HDPE LINER SHALL BE PLACED ON THE BOTTOM OF THE STOCKPILE AREA AND ANCHORED A MINIMUM 6 INCHES BELOW THE SURFACE. THE LINER SHALL BE PROPERLY SEAMED TO FORM A LEAK-PROOF LINER. THE MATERIALS AND INSTALLATION METHODS SHALL BE SUBMITTED TO THE ENGINEER FOR REVIEW.
3. THE SURFACE OF THE STAGING AREA SHALL BE GRADED TO PROMOTE FLOW AWAY FROM THE STOCKPILE.
4. SILT FENCE SHALL BE CONSTRUCTED AROUND THE PERIMETER OF THE STOCKPILE AREA.
5. RAMPS SHALL BE CONSTRUCTED AS NECESSARY FOR ACCESS TO THE STOCKPILE AREA.
6. THE SUBGRADE SHALL BE SMOOTH WITHOUT STONES OR OTHER OBJECTS THAT COULD PUNCTURE THE GEOMEMBRANE. THE SUBGRADE SHALL BE PROOF-ROLLED WITH A LOADED TANDEM, AND ANY SOFT, SPONGY OR PUMPING SOIL SHALL BE REMOVED, REPLACED AND RECOMPACTED.
7. THE SOIL MATERIALS SHALL BE PLACED ON THE LINER AND COVERED WITH THE SHEETING OR TARP DURING ALL NON-WORKING HOURS AND DURING PRECIPITATION EVENTS. NO RAINWATER SHALL CONTACT THE SOIL WHILE STAGED IN THE STOCKPILE AREA.
8. WASTE HAULER ACCESS WILL BE LIMITED TO THE ACCESS ROAD FROM THE PROPOSED OFFSITE DISPOSAL STOCKPILE AREA TO THE CHERRY AVENUE EXTENSION/AEROSPACE BOULEVARD. WASTE HAULERS WILL RECEIVE APPROPRIATE WASTE AND THEN BE DIRECTED TO THE WASHDOWN PAD PRIOR TO REENTRY ONTO PUBLIC ROADS.

Current Plotsyle : ByColor
Layout Tab: Erosion Control Plan
Date\Time : Fri, 07 Sep 2007 - 3:35pm
Path\Name : G:\APROJECT\Northrop Grumman\Superfund\2007\OU3\NY001464.1407 VCS IRM\VCS Desig-Const\95% Design\Cadd\DEC_95% Submittal\02_Soil Erosion & Sediment Control Plan.dwg
Acad Version : R17.0s (LMS Tech)
User Name : alsanchez

© 2007 ARCADIS OF NEW YORK, INC.

DRAWING CONFIDENTIAL: THIS DRAWING AND ALL INFORMATION CONTAINED THEREON IS AND SHALL REMAIN THE PROPERTY OF ARCADIS OF NEW YORK, INC. AS AN INSTRUMENT OF PROFESSIONAL SERVICE. THIS INFORMATION SHALL NOT BE USED IN WHOLE OR IN PART WITHOUT THE FULL KNOWLEDGE AND PRIOR WRITTEN CONSENT OF ARCADIS OF NEW YORK, INC.

SCALE VERIFICATION
THIS BAR REPRESENTS ONE INCH ON THE ORIGINAL DRAWING:
USE TO VERIFY FIGURE REPRODUCTION SCALE

NO.	ISSUED DATE	REVISION DESCRIPTION	BY/CKD
0	9/2007	95% DESIGN SUBMITTAL	AS/KZ

KYRIACOS PIERIDES, PH.D., P.E.
N.Y. LIC. NO. 073670

ARCADIS OF NEW YORK, INC.
Two Huntington Quadrangle
Suite 1S10
Melville, NY 11747
Tel: 631-249-7600 Fax: 631-249-7610
www.arcadis-us.com

NORTHROP GRUMMAN OPERABLE UNIT 3
SOIL GAS INTERIM REMEDIAL MEASURE
FORMER GRUMMAN SETTLING PONDS
BETHPAGE, NEW YORK

SOIL EROSION AND SEDIMENT CONTROL PLAN, DETAILS AND NOTES

PROJECT MANAGER: C. SAN GIOVANNI	DEPARTMENT MANAGER: C. TUOHY
LEAD DESIGN PROF.: C. TUOHY	CHECKED BY: K. ZEGEL
TASK/PHASE NUMBER: 00004	DRAWN BY: A. SANCHEZ
PROJECT NUMBER: NY001464.1407	DRAWING NUMBER: 2

GENERAL NOTES

1. ALL PRESSURE INDICATORS, FLOW INDICATORS, TEMPERATURE INDICATORS, AND NUMBERED VALVES SHALL BE TAGGED (DOG TAG STYLE) IN FIELD AS SHOWN BELOW WITH METHOD APPROVED BY THE ENGINEER.
2. UNLESS MAKE AND/OR MODEL OF EQUIPMENT IS SHOWN, CONTRACTOR IS RESPONSIBLE FOR SPECIFYING EQUIPMENT WHICH MEETS LISTED CRITERIA AS DESCRIBED BELOW. CONTRACTOR SHALL SUBMIT TO ENGINEER SHOP DRAWINGS AND TECHNICAL SPECIFICATIONS OF ALL PROPOSED EQUIPMENT.
3. UNLESS NOTED OTHERWISE, ALL PIPING, VALVES, AND FITTINGS SHALL BE SCH. 80 PVC OR APPROVED EQUIVALENT.
4. ALL WATER SAMPLE PORTS SHALL BE COMPRISED OF ONE 1/4" NIPPLE, ONE 1/4" BALL VALVE AND ONE 1/4" COPPER TUBING.
5. ALL AIR SAMPLE PORTS SHALL BE COMPRISED OF 1/4" O.D. COPPER TUBING WITH END CONNECTION OF 1/4" I.D. FERRUL AND 1/4" SWAGELOCK NUT.
6. FLOW ELEMENT ACCESS SHALL CONSIST OF 1/4" THREADED HOLE CAPPED WITH A 1/4" STEEL PLUG.
7. UNIONS SHALL BE INSTALLED AS DIRECTED BY ENGINEER TO ALLOW FULL DISCONNECTION OF PIPING\EQUIPMENT DURING MAINTENANCE ACTIVITY.
8. SEE APPENDIX B OF THE 95-PERCENT ENGINEERING REPORT FOR INDIVIDUAL LINE SIZES OF BELOW GRADE PIPE.
9. EQUIPMENT INLET/OUTLET SIZES NOT SHOWN. CONTRACTOR TO PROVIDE REDUCERS/EXPANSIONS AS NECESSARY TO MAKE CONNECTIONS. MATERIALS OF CONSTRUCTION TO BE SIMILAR AS SHOWN HEREIN AND ARE SUBJECTED TO ENGINEERS APPROVAL.

PIPING SYMBOLS

- CONDENSATE LINE
- LIMITS OF TREATMENT BUILDING
- BALL VALVE (NORMALLY OPEN)
- BALL VALVE (NORMALLY CLOSED)
- CHECK VALVE
- BUTTERFLY VALVE (NORMALLY OPEN)
- BUTTERFLY VALVE (NORMALLY CLOSED)
- PROCESS VAPOR LINE
- UNION
- 10"x6" EXPANSION/REDUCER
- TEMPORARY CONNECTION
- SAMPLE PORT/DRAIN
- VACUUM BREAK
- FE FLOW ELEMENT ACCESS

INSTRUMENT SYMBOLS

- INLINE INSTRUMENT
- ISOLATED INSTRUMENT CONNECTED TO PROCESS LINE
- INSTRUMENT CONNECTED TO PROCESS LINE
- FIELD MOUNTED
- PRIMARY PANEL MOUNTED
- RUN INDICATOR LIGHT
- PLC INTERLOCK

SOIL GAS SYSTEM PROCESS FLOW TABLE

LOCATION ON DRAWING	CORRESPONDING GAUGE ID	WELL ID	FLOW RATE (SCFM)	PRESSURE (IWC)	VACUUM (IWC)	DESIGN TVOC LOAD (ug/m³)	TEMPERATURE (°F)
A	VI-101	DW-7D	49	—	-1.4	86,751	65
B	VI-102	DW-3D	102	—	-2.6	148,941	65
C	VI-103	DW-5D	75	—	-33.5	50,092	65
D	VI-104	DW-6D	75	—	-33.5	84,388	65
E	VI-105	DW-1D	75	—	-33.5	696	65
F	VI-106	DW-4D	75	—	-33.5	1,609	65
G	VI-107	DW-2D	100	—	-5.0	1424	65
H	VI-108	DW-11S	66	—	-3.8	6263	65
I	VI-109	DW-10S	66	—	-3.8	1346	65
J	VI-110	DW-2S	66	—	-3.8	2007	65
K	VI-111	DW-9S	66	—	-3.8	1910	65
L	VI-112	DW-8S	66	—	-3.8	4942	65
M	VI-113	DW-4S	150	—	-3.9	1910	65
N	VI-114	DW-1S	150	—	-3.9	1018	65
O	VI-115	DW-6S	150	—	-3.9	10178	65
P	VI-116	DW-5S	150	—	-3.9	1037	65
Q	VI-117	DW-3S	79	—	-1.6	632	65
R	VI-118	DW-7S	45	—	-0.8	632	65
S	VI-119	---	716	—	-51.5	31,025	65
T	VI-120	---	685	—	-30.2	8,550	65
U	VI-121	---	685	—	-30.2	8,550	65
V	VI-122	---	716	—	-64.1	31,025	65
W	VI-123	---	685	—	-41.8	8,550	65
X	VI-124	---	685	—	-41.8	8,550	65
Y	PI-601	---	2086	17	—	16,265	150
Z	PI-602	---	2086	0	—	<AGC	100

EQUIPMENT DESCRIPTIONS

AIR FILTERS:
DESIGNATION: AF-200, AF-300 AND AF-400
MAKE: SOLBERG CSL-245P-500
TYPE: IN-LINE PARTICULATE

BLOWERS:
DESIGNATION: BL-200
MAKE: ROTRON EN14
TYPE: REGENERATIVE
SIZE: 30 HP, 3ø, 480V

BLOWERS:
DESIGNATION: BL-300 AND BL-400
MAKE: ROTRON EN979
TYPE: REGENERATIVE
SIZE: 20 HP, 3ø, 480V

HEAT EXCHANGER:
DESIGNATION: HX-600
MAKE: XCHANGER AA-2750
TYPE: FAN FORCED AIR
SIZE: 2 HP, 3ø, 480 V

LIQUID KNOCKOUT TANKS:
DESIGNATION: KO-200, KO-300 AND KO-400
MAKE: GASHO GX-90
SIZE: 22' X 56'
CAPACITY: 90 GAL. TOTAL 30 GAL. STORAGE

STORAGE TANK:
DESIGNATION: ST-510
MAKE: NORWESCO
TYPE: FREESTANDING WATER TANK
SIZE: 400 GALLON

TRANSFER PUMPS:
DESIGNATION: TP-210, TP-310 AND TP-410
MAKE: OBERDORFER BRONZE GEAR 992R
TYPE: POSITIVE DISPLACMENT
SIZE: 0.5 HP, 3ø, 480V

TEMPORARY VAPOR PHASE GAC:
DESIGNATION: VP-600
MAKE: US FILTER RB-10 OR EQUAL
SIZE: 10,000 LB

PIPE IDENTIFICATION

LINE SIZE — PIPING SPECIFICATION (SEE PROCESS ABBREVIATIONS)
6"ø SCH. 80 PVC — DIRECTION OF FLOW

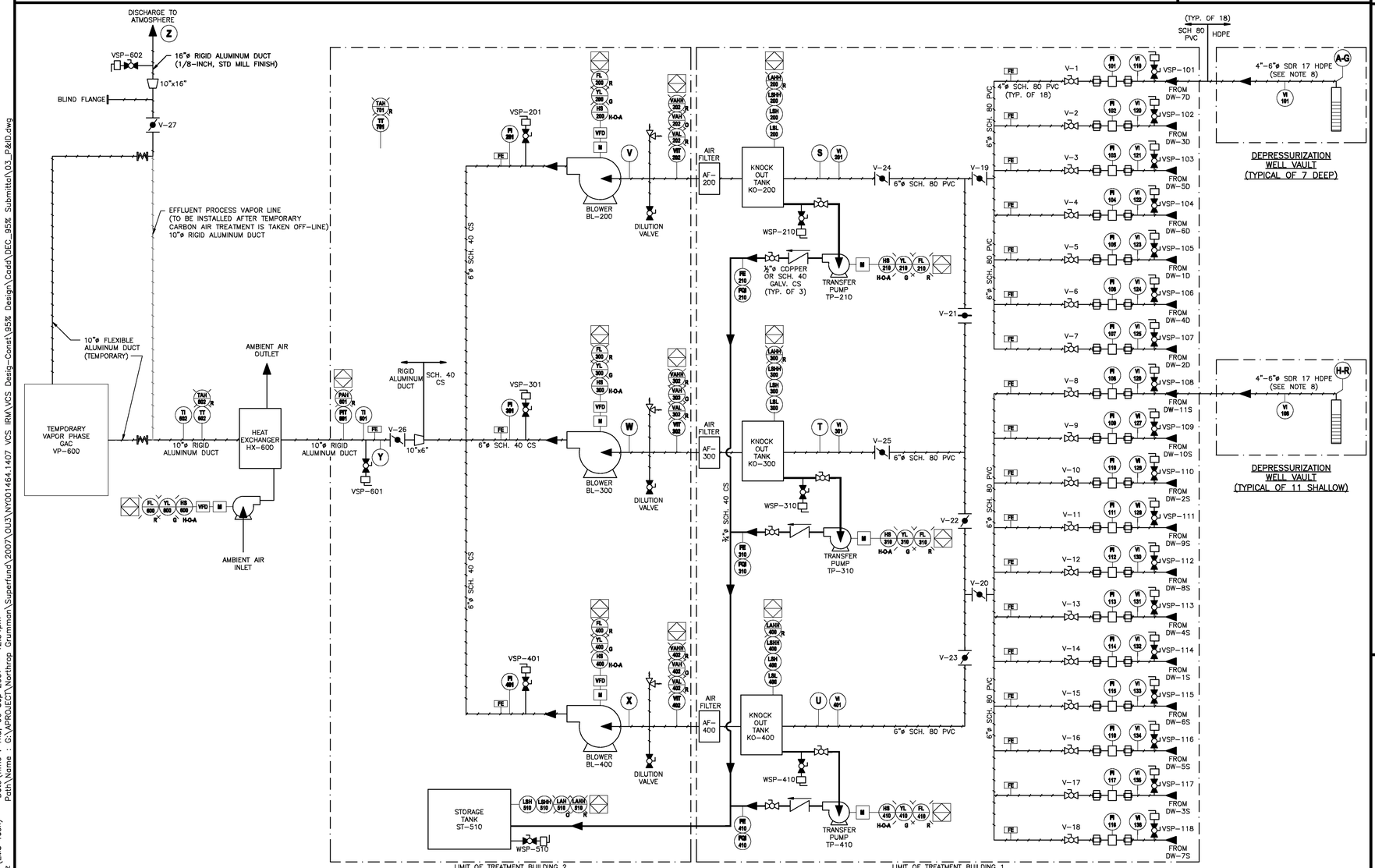

PLC INTERLOCK DESCRIPTIONS

THE MAIN CONTROL PANEL WILL CONSIST OF A PROGRAMMABLE LOGIC CONTROLLER (PLC) AND SERVE AS THE CENTRAL CONTROL POINT FOR THE SYSTEM. NEGATIVE PRESSURE WILL BE MAINTAINED WITHIN THE SUBSURFACE THROUGH 18 EXTRACTION WELLS CONNECTED TO A DEPRESSURIZATION SYSTEM. THE DEPRESSURIZATION SYSTEM WILL CONSIST OF THREE (3) REGENERATIVE TYPE BLOWERS ARRANGED IN PARALLEL. ONE BLOWER (BL-200) WILL BE DEDICATED FOR DEEP EXTRACTION WELLS DW-1D THROUGH DW-7D. TWO ADDITIONAL BLOWERS (BL-300 AND BL-400) WILL BE DEDICATED FOR SHALLOW EXTRACTION WELLS DW-1S THROUGH DW-11S. HOWEVER, ALL BLOWERS WILL BE VALVED IN SUCH A WAY THAT THEY CAN BE USED AS BACKUPS IN CASE OF FAILURE OF ANY INDIVIDUAL BLOWER. MOISTURE WILL BE REMOVED FROM THE EXTRACTED SOIL GAS USING LIQUID KNOCKOUT TANKS KO-200, KO-300, AND KO-400. COLLECTED MOISTURE WILL BE AUTOMATICALLY TRANSFERRED TO STORAGE TANK ST-510 BY TRANSFER PUMPS TP-210, TP-310, AND TP-410. EXTRACTED SOIL GAS WILL BE TREATED USING A TEMPORARY VAPOR PHASE TREATEMENT SYSTEM (VP-600) UNTIL IT IS DEMONSTRATED THAT THE INFLUENT VAPOR CONCENTRATION IS BELOW APPLICABLE AIR STANDARDS (NYSDEC DAR-1 AGC/SGCs) AS ANTICIPATED. WATER COLLECTED IN STORAGE TANK ST-510 WILL INITIALLY BE TRANSFERED TO THE LOCAL POTW THROUGH EXISTING AGREEMENT. THE SYSTEM WILL CONTAIN A SERIES OF ALARMS AND INTERLOCKS TO ENSURE PROPER OPERATION AND OPTIMIZE SYSTEM OPERATION TIME.

A DESCRIPTION OF THE ALARMS AND INTERLOCKS THAT WILL BE USED TO CONTROL THE SYSTEM IS DESCRIBED BELOW:

INTERLOCK ID	ALARM	DESCRIPTION	REASON	ALARM RANGE
A	FL-200	BLOWER MOTOR BL-200	BLOWER MOTOR BL-200 FAILURE	
B	FL-210	TRANSFER PUMP MOTOR TP-210	TRANSFER PUMP MOTOR TP-210 FAILURE	
A	LAHH-200	KNOCKOUT TANK HIGH HIGH LEVEL	TRANSFER PUMP MOTOR TP-210 FAILURE.	
B	VAH-202	BLOWER VACUUM HIGH LEVEL	AIR FILTER OR LINE OBSTRUCTION	-60 IWC
A	VAHH-202	BLOWER VACUUM HIGH HIGH LEVEL	AIR FILTER OR LINE OBSTRUCTION	-65 IWC
A	VAL-202	DEEP DEPRESSURIZATION WELL VACUUM LOW	RECOVERY LINE OR BLOWER FAILURE	-30 IWC
A	FL-300	BLOWER MOTOR BL-300	BLOWER MOTOR BL-300 FAILURE	
B	FL-310	TRANSFER PUMP MOTOR TP-310	TRANSFER PUMP MOTOR TP-310 FAILURE	
A	LAHH-300	KNOCKOUT TANK HIGH HIGH LEVEL	TRANSFER PUMP MOTOR TP-310 FAILURE.	
B	VAH-302	BLOWER VACUUM HIGH LEVEL	AIR FILTER OR LINE OBSTRUCTION	-30 IWC
A	VAHH-302	BLOWER VACUUM HIGH HIGH LEVEL	AIR FILTER OR LINE OBSTRUCTION	-40 IWC
A	VAL-302	SHALLOW DEPRESSURIZATION WELL VACUUM LOW	RECOVERY LINE OR BLOWER FAILURE	-15 IWC
A	FL-400	BLOWER MOTOR BL-400	BLOWER MOTOR BL-400 FAILURE	
B	FL-410	TRANSFER PUMP MOTOR TP-410	TRANSFER PUMP MOTOR TP-410 FAILURE	
A	LAHH-400	KNOCKOUT TANK HIGH HIGH LEVEL	TRANSFER PUMP MOTOR TP-410 FAILURE	
B	VAH-402	BLOWER VACUUM HIGH LEVEL	AIR FILTER OR LINE OBSTRUCTION	-30 IWC
A	VAHH-402	BLOWER VACUUM HIGH HIGH LEVEL	AIR FILTER OR LINE OBSTRUCTION	-40 IWC
A	VAL-402	SHALLOW DEPRESSURIZATION WELL VACUUM LOW	RECOVERY LINE OR BLOWER FAILURE	-15 IWC
B	LAH-510	STORAGE TANK HIGH LEVEL	STORAGE TANK ST-510 FULL	
A	LAHH-510	STORAGE TANK HIGH HIGH LEVEL	STORAGE TANK ST-510 OVER FILLED	
B	FL-600	HEAT EXCHANGER MOTOR HX-600	HX-600 MOTOR FAILURE	
A	PAH-601	EFFLUENT HIGH PRESSURE	PRESSURE HIGH ON DISCHARGE	+20 IWC
A	TAH-602	EFFLUENT HIGH TEMPERATURE	HEAT EXCHANGER FAILURE	130°F
A	TAH-701	TREATMENT BUILDING 2 HIGH TEMPERATURE	HIGH TEMPERATURE IN TREATMENT BUILDING 2	105°F

1. ALARM SETPOINTS SHOWN ARE APPROXIMATE. FINAL SETPOINTS TO BE FIELD DETERMINED DURING SYSTEM STARTUP.
2. ALL ALARM SETPOINTS SHALL BE OPERATOR ADJUSTABLE ON THE GRAPHICAL USER INTERFACE.
3. HEAT EXCHANGER HX-600 MOTOR SPEED TO BE CONROLLED BY THE TEMPERATURE FROM TT-602. DESIRED DISCHARGE TEMPERATUTRE TO BE AN OPERATOR INPUT ON THE GRAPHICAL USER INTERFACE.

A MAIN SYSTEM INTERLOCK-RESULTS IN SHUTDOWN OF ALL SYSTEM COMPONENTS.

B MINOR SYSTEM INTERLOCK-RESULTS IN CALLOUT OF THE AUTODIALER ONLY. IF ALARM IS NOT CLEARED MANUALLY WITHIN 24 HOURS, THE MAIN SYSTEM INTERLOCK WILL BE ENGAGED.

GENERAL ABBREVIATIONS

ø	DIAMETER	KO	KNOCKOUT TANK	SGC	SHORT-TERM GUIDANCE CRITERIA
AF	AIR FILTER	LAHH	LEVEL ALARM LIGHT HIGH HIGH	ST	STORAGE TANK
AGC	ANNUAL GUIDANCE CRITERIA	LSH	LEVEL SWITCH HIGH	TAH	TEMPERATURE ALARM HIGH
BL	BLOWER	LSHH	LEVEL SWITCH HIGH HIGH	TP	TRANSFER PUMP
CFM	CUBIC FEET PER MINUTE	LSL	LEVEL SWITCH LOW	TT	TEMPERATURE TRANSMITTER
CS	CARBON STEEL	M	MOTOR	V	VALVE
CV	CHECK VALVE	ug/m³	MICROGRAMS PER CUBIC METER	VAH	VACUUM ALARM HIGH
FE	FLOW MONITORING ELEMENT	O	ORANGE INDICATOR LIGHT	VAHH	VACUUM ALARM HIGH HIGH
FI	FLOW RATE INDICATOR	PAH	PRESSURE ALARM HIGH	VAL	VACUUM ALARM LOW
FL	FAULT LIGHT	PI	PRESSURE INDICATOR	VALL	VACUUM ALARM LOW LOW
FQI	FLOW TOTALIZER INDICATOR	PIT	PRESSURE INDICATING TRANSMITTER	VFD	VARIABLE FREQUENCY DRIVE
G	GREEN INDICATOR LIGHT	PLC	PROGRAMMABLE LOGIC CONTROLLER	VI	VACUUM INDICATOR
GAC	GRANULAR ACTIVATED CARBON	PSIG	POUNDS PER SQUARE INCH GAUGE	VIT	VACUUM INDICATING TRANSMITTER
GALV	GALVANIZED	PT	PRESSURE TRANSMITTER	VSP	VAPOR SAMPLE POINT
HDPE	HIGH DENSITY POLYETHYLENE	PVC	POLYVINYL CHLORIDE	VT	VACUUM TRANSMITTER
H-O-A	HAND-OFF-AUTO	R	RED INDICATOR LIGHT	WSP	WATER SAMPLE POINT
HS	HAND SWITCH	SCFM	STANDARD CUBIC FEET PER MINUTE	YL	INDICATING LIGHT
HX	HEAT EXCHANGER	SCH	SCHEDULE		
IWC	INCHES OF WATER COLUMN	SDR	STANDARD DIAMETER RATIO		

© 2007 ARCADIS OF NEW YORK, INC.

DRAWING CONFIDENTIAL: THIS DRAWING AND ALL INFORMATION CONTAINED THEREON IS AND SHALL REMAIN THE PROPERTY OF ARCADIS OF NEW YORK, INC. AS AN INSTRUMENT OF PROFESSIONAL SERVICE. THIS INFORMATION SHALL NOT BE USED IN WHOLE OR IN PART WITHOUT THE FULL KNOWLEDGE AND PRIOR WRITTEN CONSENT OF ARCADIS OF NEW YORK, INC.

SCALE VERIFICATION
THIS BAR REPRESENTS ONE INCH ON THE ORIGINAL DRAWING:
USE TO VERIFY FIGURE REPRODUCTION SCALE

NO.	ISSUED DATE	REVISION DESCRIPTION	BY/CKD
1	9/2007	95% DESIGN SUBMITTAL	AS/KZ
0	7/2007	50 TO 75% DESIGN SUBMITTAL	AS/KZ

KYRIACOS PIERIDES, PH.D., P.E.
N.Y. LIC. NO. 073670

ARCADIS OF NEW YORK, INC.
Two Huntington Quadrangle
Suite 1S10
Melville, NY 11747
Tel: 631-249-7600 Fax: 631-249-7610
www.arcadis-us.com

NORTHROP GRUMMAN OPERABLE UNIT 3
SOIL GAS INTERIM REMEDIAL MEASURE
FORMER GRUMMAN SETTLING PONDS
BETHPAGE, NEW YORK

PROJECT MANAGER	DEPARTMENT MANAGER	LEAD DESIGN PROF.	CHECKED BY
C. SAN GIOVANNI	C. TUOHY	C. TUOHY	K. ZEGEL
		TASK/PHASE NUMBER: 00004	DRAWN BY: A. SANCHEZ
		PROJECT NUMBER: NY001464.1407	DRAWING NUMBER: 3

PROCESS AND INSTRUMENTATION DIAGRAM (P&ID)

Current Plotstyle : ByColor
Layout Tab: P&ID
Date\Time : Thu, 06 Sep 2007 - 12:34pm
Path\Name : G:\PROJECT\Northrop Grumman\Superfund\2007\OU3\NY001464.1407 VCS IRM\VCS Design-Const\95% Design\Cadd\DEC_95% Submittal\03_P&ID.dwg
Acad Version : R17.0s (LMS Tech)
User Name : alsanchez

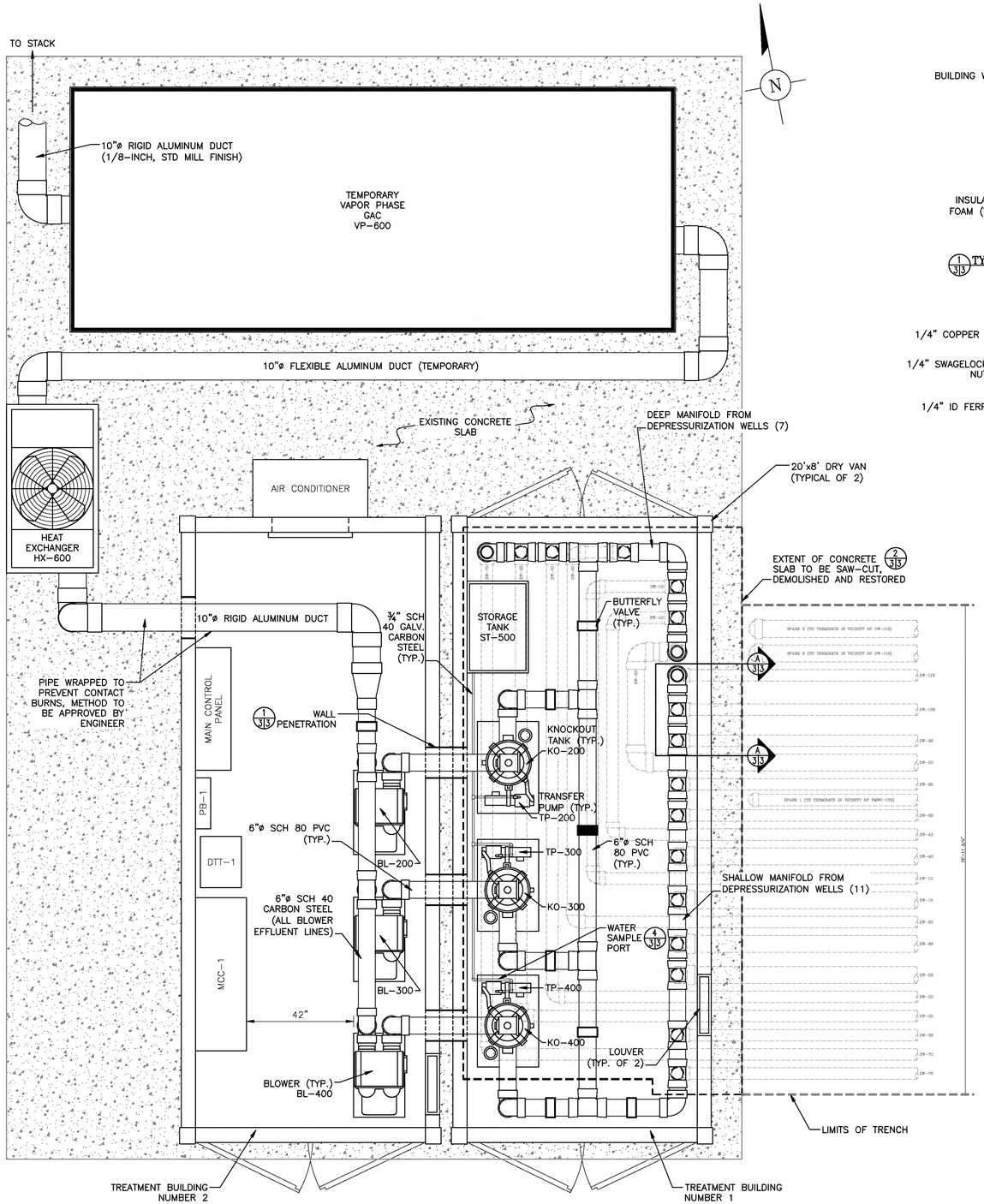

EQUIPMENT/BUILDING LAYOUT PLAN
SCALE: 1" = 2'-0"

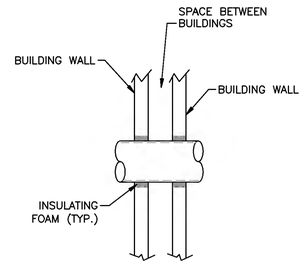

1/3 TYPICAL WALL PENETRATION
SCALE: N.T.S

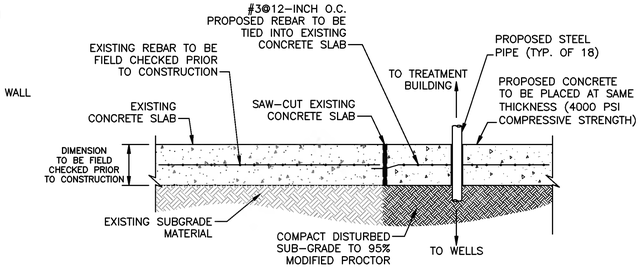

2/3 CONCRETE SLAB RESTORATION DETAIL
SCALE: N.T.S

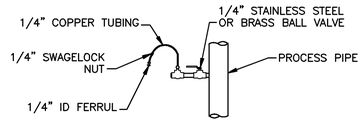

3/3 TYPICAL VAPOR SAMPLE PORT DETAIL
SCALE: N.T.S

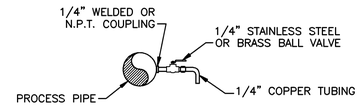

4/3 TYPICAL WATER SAMPLE PORT DETAIL
SCALE: N.T.S

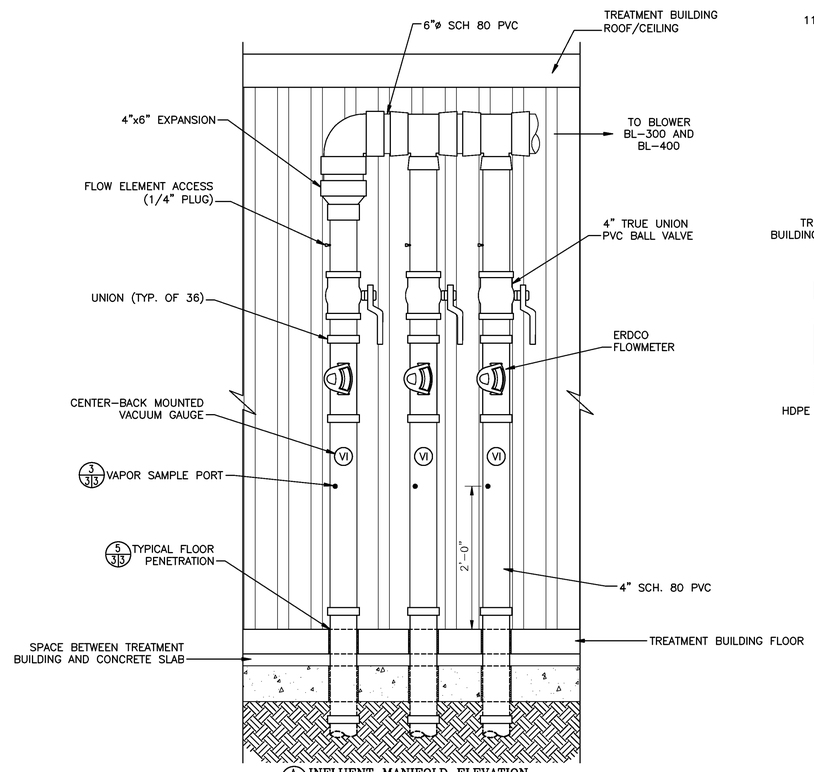

A/3 INFLUENT MANIFOLD ELEVATION
SCALE: N.T.S

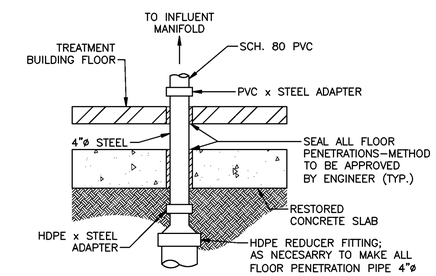

5/3 TYPICAL FLOOR PENETRATION
SCALE: N.T.S

CONSTRUCTION NOTES:

1. PIPE ROUTING AND EQUIPMENT LAYOUT SHOWN FOR LAYOUT PURPOSES ONLY. CONTRACTOR TO FOLLOW PIPING AND INSTRUMENTATION DIAGRAM WHILE ASSEMBLING PIPING FOR VALVING, INSTRUMENTATION, AND REDUCTION REQUIREMENTS. PROVIDE LAYOUT/FABRICATION DRAWINGS FOR APPROVAL PRIOR TO CONSTRUCTION.
2. PLACEMENT OF VALVES TO BE SUCH THAT THEY ARE ACCESSIBLE AND OPERATE WITH EASE.
3. PLACEMENT OF INSTRUMENTATION TO BE SUCH THAT THEY ARE VISIBLE WITH GAUGES AND READOUTS CLEARLY IN VIEW AND ORIENTATED CORRECTLY.
4. ALL INSTRUMENTS, EQUIPMENT, AND VALVING TO BE INSTALLED PER MANUFACTURER'S REQUIREMENTS.
5. CONTRACTOR TO PROVIDE PIPE SUPPORTS AS REQUIRED. TYPE, PLACEMENT, AND NUMBER OF SUPPORTS ARE SUBJECT TO ENGINEER'S APPROVAL.
6. ALL EQUIPMENT, ELECTRICAL PANELS, AND PIPING OF CONSIDERABLE WEIGHT LOADING TO BE MOUNTED AND SUPPORTED AS FREESTANDING OR TO HAVE ADEQUATE FLOOR SUPPORTS.
7. NON-SHRINK GROUT OR OTHER APPROVED METHOD IS TO BE USED TO FILL ALL VOIDS AROUND PIPE PENETRATIONS IN CONCRETE.
8. INTERIOR PIPES SHALL BE LABELED WITH APPROPRIATE STICKERS INDICATING FLOW DIRECTION AND CONTENTS OF PIPE.
9. CONTRACTOR SHALL SUBMIT TO ENGINEER FOR APPROVAL SHOP DRAWINGS PRIOR TO CONSTRUCTION FOR ALL PROPOSED EQUIPMENT. PROPOSED TANK SHALL INCLUDE ALL PROPOSED LEVEL SWITCH LOCATIONS AND BULKHEAD FITTING FOR PIPE CONNECTIONS.
10. EQUIPMENT SHOULD BE PLACED IN LOCATIONS SPECIFIED, UNLESS APPROVED BY ENGINEER. ALL EQUIPMENT SHALL BE POSITIONED PRIOR TO MOUNTING (BOLTING) EQUIPMENT TO FLOOR. EXACT EQUIPMENT LOCATIONS MAY BE MODIFIED TO ALLOW FOR EASE OF MOVEMENT AND ACCESS BUT IS SUBJECT TO FIELD ENGINEERS APPROVAL.
11. ALL PIPING\ELECTRICAL CONDUITS SHALL BE ROUTED ALONG WALLS AND/OR OVERHEAD TO ALLOW EQUIPMENT ACCESS AND PREVENT TRIPPING HAZARDS. PIPING\ELECTRICAL CONDUITS SHALL NOT BE INSTALLED ALONG FLOORS UNLESS APPROVED BY THE ENGINEER.

Current Plotstyle : ByColor
Layout Tab: Bldg. Layout
Date\Time : Fri, 07 Sep 2007 - 2:10pm
Path\Name : G:\APROJECT\Northrop Grumman\Superfund\2007\OU3\NY001464.1407 VCS IRM\VCS Desig-Const\95% Design\Cadd\DEC_95% Submittal\04_Building Layout.dwg
Acad Version : R17.0s (LMS Tech)
User Name : alsanchez

© 2007 ARCADIS OF NEW YORK, INC.

DRAWING CONFIDENTIAL: THIS DRAWING AND ALL INFORMATION CONTAINED THEREON IS AND SHALL REMAIN THE PROPERTY OF ARCADIS OF NEW YORK, INC. AS AN INSTRUMENT OF PROFESSIONAL SERVICE. THIS INFORMATION SHALL NOT BE USED IN WHOLE OR IN PART WITHOUT THE FULL KNOWLEDGE AND PRIOR WRITTEN CONSENT OF ARCADIS OF NEW YORK, INC.

SCALE VERIFICATION
THIS BAR REPRESENTS ONE INCH ON THE ORIGINAL DRAWING:
USE TO VERIFY FIGURE REPRODUCTION SCALE

NO.	ISSUED DATE	REVISION DESCRIPTION	BY/CKD
1	9/2007	95% DESIGN SUBMITTAL	AS/KZ
0	7/2007	50 TO 75% DESIGN SUBMITTAL	AS/KZ

KYRIACOS PIERIDES, PH.D., P.E.
N.Y. LIC. NO. 073670

ARCADIS OF NEW YORK, INC.
Two Huntington Quadrangle
Suite 1B10
Melville, NY 11747
Tel: 631-249-7600 Fax: 631-249-7610
www.arcadis-us.com

NORTHROP GRUMMAN OPERABLE UNIT 3
SOIL GAS INTERIM REMEDIAL MEASURE
FORMER GRUMMAN SETTLING PONDS
BETHPAGE, NEW YORK

BUILDING LAYOUT AND DETAILS

PROJECT MANAGER	DEPARTMENT MANAGER	LEAD DESIGN PROF.	CHECKED BY
C. SAN GIOVANNI	C. TUOHY	C. TUOHY	K. ZEGEL
		TASK/PHASE NUMBER: 00004	DRAWN BY: A. SANCHEZ
		PROJECT NUMBER: NY001464.1407	DRAWING NUMBER: 4

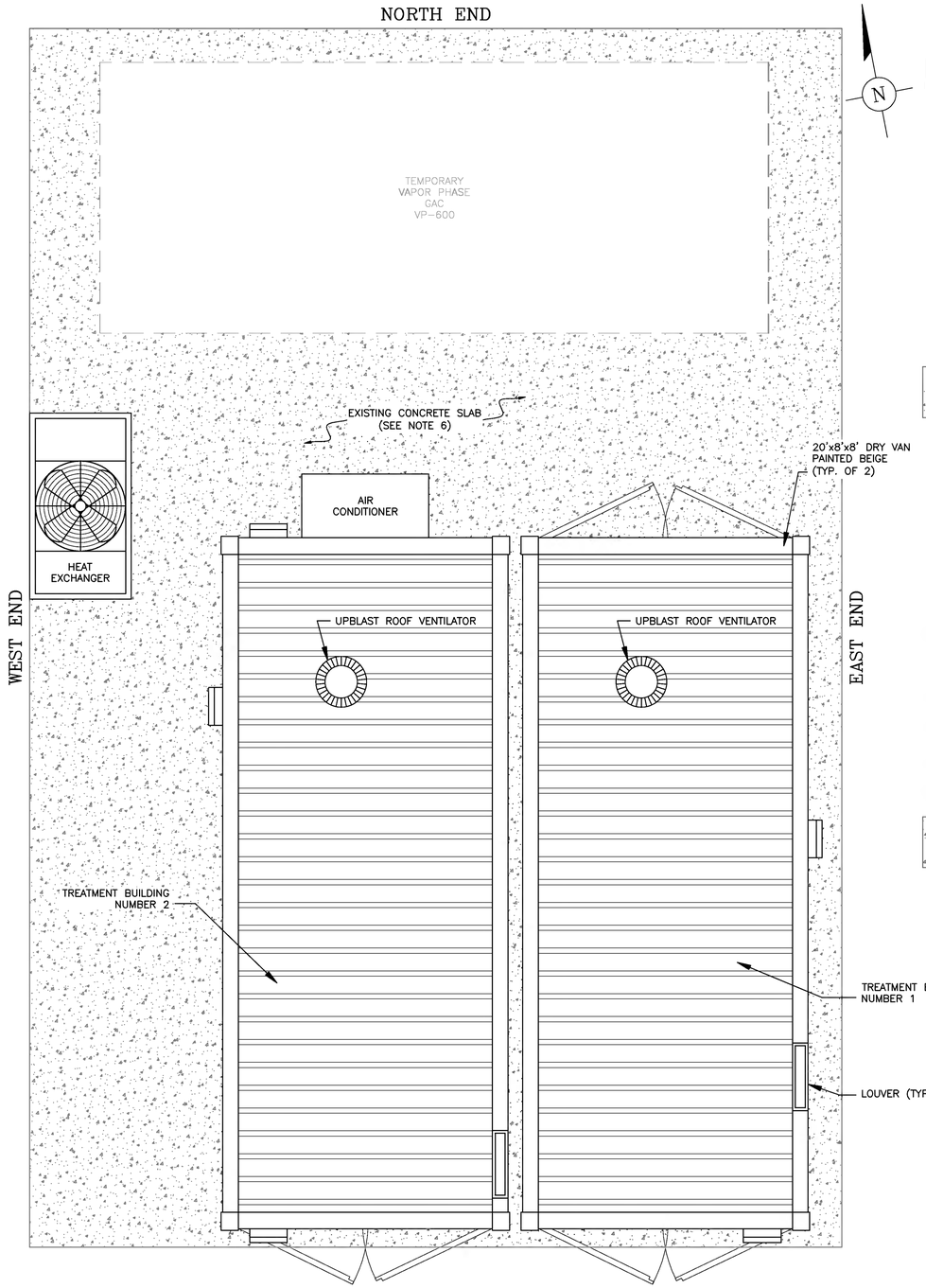

PLAN VIEW
SCALE: 1" = 2'-0"

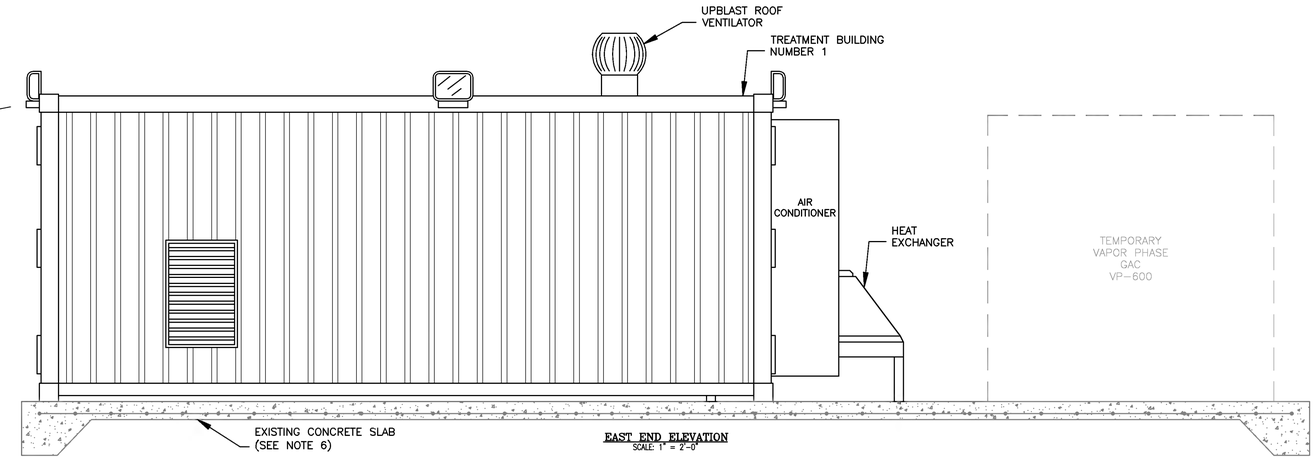

EAST END ELEVATION
SCALE: 1" = 2'-0"

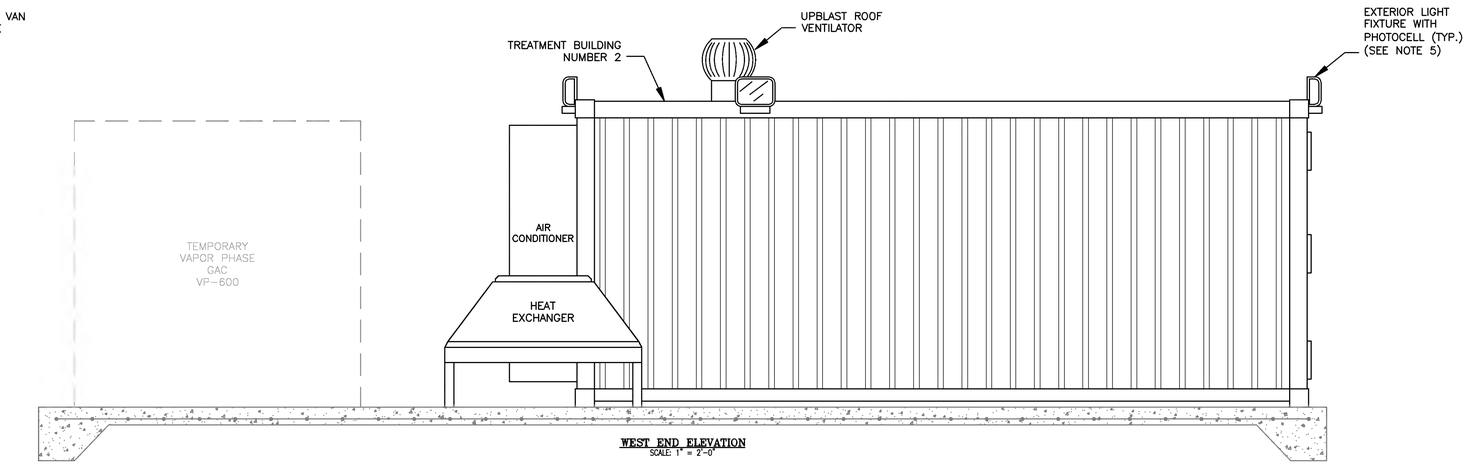

WEST END ELEVATION
SCALE: 1" = 2'-0"

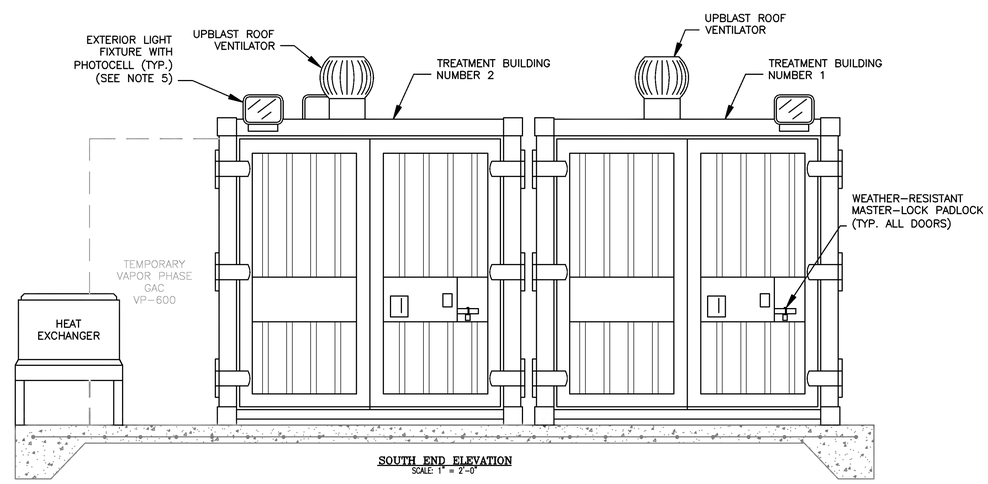

SOUTH END ELEVATION
SCALE: 1" = 2'-0"

GENERAL NOTES:

1. ALL CONTAINERS SHALL HAVE INSULATED DOUBLE DOORS WHERE INDICATED.
2. ALL DOUBLE DOORS SHALL HAVE LOCKING MECHANISM. LOCKING METHOD TO BE APPROVED BY ENGINEER PRIOR TO CONSTRUCTION.
3. CONTRACTOR SHALL MAINTAIN A POSITIVE SLOPE AWAY FROM THE TREATMENT BUILDINGS TO PROMOTE DRAINAGE OF STORMWATER. BUILDING SLAB-ON-GRADE SHALL BE MAINTAINED AT A CONSTANT ELEVATION + OR - 0.5%.
4. DRY VAN INTERIORS TO BE INSULATED WITH RIGID FOAM INSULATION WITH A MINIMUM RATING OF R-12.
5. EXACT LOCATION OF EXTERIOR LIGHT FIXTURES TO BE DETERMINED IN THE FIELD. WIRING TO BE RUN INSIDE ONLY.
6. EXISTING CONCRETE SLAB CONSTRUCTION TO BE FIELD VERIFIED.

© 2007 ARCADIS OF NEW YORK, INC.

DRAWING CONFIDENTIAL: THIS DRAWING AND ALL INFORMATION CONTAINED THEREON IS AND SHALL REMAIN THE PROPERTY OF ARCADIS OF NEW YORK, INC. AS AN INSTRUMENT OF PROFESSIONAL SERVICE. THIS INFORMATION SHALL NOT BE USED IN WHOLE OR IN PART WITHOUT THE FULL KNOWLEDGE AND PRIOR WRITTEN CONSENT OF ARCADIS OF NEW YORK, INC.

SCALE VERIFICATION
THIS BAR REPRESENTS ONE INCH ON THE ORIGINAL DRAWING:
USE TO VERIFY FIGURE REPRODUCTION SCALE

NO.	ISSUED DATE	REVISION DESCRIPTION	BY/CKD
0	9/2007	95% DESIGN SUBMITTAL	AS/KZ

KYRIACOS PIERIDES, PH.D., P.E.
N.Y. LIC. NO. 073670

ARCADIS OF NEW YORK, INC.
Two Huntington Quadrangle
Suite 1S10
Melville, NY 11747
Tel: 631-249-7600 Fax: 631-249-7610
www.arcadis-us.com

NORTHROP GRUMMAN OPERABLE UNIT 3
SOIL GAS INTERIM REMEDIAL MEASURE
FORMER GRUMMAN SETTLING PONDS
BETHPAGE, NEW YORK

BUILDING ELEVATIONS AND DETAILS

PROJECT MANAGER	DEPARTMENT MANAGER	LEAD DESIGN PROF.	CHECKED BY
C. SAN GIOVANNI	C. TUOHY	C. TUOHY	K. ZEGEL
		TASK/PHASE NUMBER: 00004	DRAWN BY: A. SANCHEZ
		PROJECT NUMBER: NY001464.1407	DRAWING NUMBER: 5

Current Plotstyle : ByColor
Layout Tab: Bldg. Elev.
Date\Time : Fri, 07 Sep 2007 - 10:51am
Path\Name : G:\APROJECT\Northrop Grumman\Superfund\2007\OU3\NY001464.1407 VCS IRM\VCS Desig-Const\95% Design\Cadd\DEC_95% Submittal\05_Building Elevations.dwg
Acad Version : R17.0s (LMS Tech)
User Name : alsanchez