WILLIS AVE./SEMET TAR BEDS IRM
SHEET PILE ANCHORAGE
CONTRACT B

DRAWING NO.	TITLE
SPA-001B	COVER SHEET
SPA-002B	SHEET PILE ANCHORAGE GENERAL PLAN
SPA-003B	SHEET PILE ANCHORAGE EXISTING CONDITIONS PLAN
SPA-004B	SHEET PILE ANCHORAGE FINAL CONDITION PLAN
SPA-005B	SHEET PILE ANCHORAGE DETAIL PLAN 1
SPA-006B	SHEET PILE ANCHORAGE PARTIAL PLAN 1 AND DETAILS
SPA-007B	SHEET PILE ANCHORAGE PARTIAL PLAN 2
SPA-008B	SHEET PILE ANCHORAGE SECTIONS
SPA-009B	SHEET PILE ANCHORAGE SECTIONS AND DETAILS 1
SPA-010B	SHEET PILE ANCHORAGE SECTIONS AND DETAILS 2
SPA-011B	SHEET PILE ANCHORAGE SECTIONS AND DETAILS 3
SPA-012B	SHEET PILE ANCHORAGE SECTIONS AND DETAILS 4
SPA-013B	EXISTING INSTRUMENTATION PLAN AND NOTES
SPA-014B	SHEET PILE ANCHORAGE CONSTRUCTION SEQUENCE
SPA-015B	SHEET PILE ANCHORAGE GENERAL NOTES AND REQUIREMENTS 1
SPA-016B	SHEET PILE ANCHORAGE GENERAL NOTES AND REQUIREMENTS 2

ABBREVIATIONS:

C – SUGGESTED CONSTRUCTION JOINT LOCATION
E – SUGGESTED EXPANSION JOINT LOCATION
TYP. – TYPICAL
U.O.N. – UNLESS OTHERWISE NOTED
V.I.F. – VERIFY IN FIELD
W.P. – WORKING POINT
LWF – LIGHT WEIGHT FILL
RWF – REGULAR WEIGHT FILL
N.I.C. – NOT IN CONTRACT
EL. XX – FINAL GRADE ELEVATION
I.D. – INNER DIAMETER
DGA – DENSE GRADED AGGREGATE
NTS – NOT TO SCALE

DRAWING IS HALF-SIZE IF PLOTTED 11x17

HONEYWELL – RESTRICTED
PRINTS OF THIS DRAWING MAY NOT BE RELEASED WITHOUT PRIOR APPROVAL

STATE OF NEW YORK · PETER WEBSTER · No. 062765-1 · LICENSED PROFESSIONAL ENGINEER

PARSONS
290 ELWOOD DAVIS ROAD, SUITE 312, LIVERPOOL, N.Y. 13088, PHONE: 315-451-9560

MUESER RUTLEDGE CONSULTING ENGINEERS
14 PENN PLAZA – 225 WEST 34th STREET
MRCE FILE NO. 9801

NOTICE
THIS DRAWING, THE PROPERTY OF HONEYWELL IS FURNISHED SUBJECT TO RETURN ON DEMAND AND THE CONDITION THAT THE INFORMATION AND TECHNOLOGY EMBODIED HEREIN SHALL NOT BE DISCLOSED OR USED AND THE DRAWING SHALL NOT BE REPRODUCED OR COPIED IN WHOLE OR IN PART EXCEPT AS PREVIOUSLY AUTHORIZED IN WRITING. ANY PERSON WHO MAY RECEIVE OR OBSERVE THIS DESIGN WILL BE HELD STRICTLY LIABLE FOR ANY VIOLATION WHETHER WILLFUL OR NEGLIGENT.

NO.	REVISION	BY	APPR.	APPR.	APPR.	APPR.	DATE	NO.	REVISION	BY	APPR.	APPR.	APPR.	APPR.	DATE	REFERENCE	DWG. NO.	APPROVALS	DATE

EQUIPMENT P.O. B/M NUMBERS:

JOB NO.
CONTRACTOR'S JOB NO.
SCALE: NONE

WILLIS AVE./SEMET TAR BEDS SITE IRM
SYRACUSE, NEW YORK
COVER SHEET

Honeywell
EMS ENGINEERING DEPARTMENT
101 COLUMBIA RD., BOX 2105
MORRISTOWN, NJ 07962

A.M.	8-09-11	S.Y.	8-09-11
DRAWN	DATE	CHK.	DATE
LOCATION	SPA-001B		REV

G:\DWGS\98\9801\NEW CONTRACT-OPT1\Contract-B\SPA-001B.dwg
Aug 09, 2011 at 3:49pm
cperez

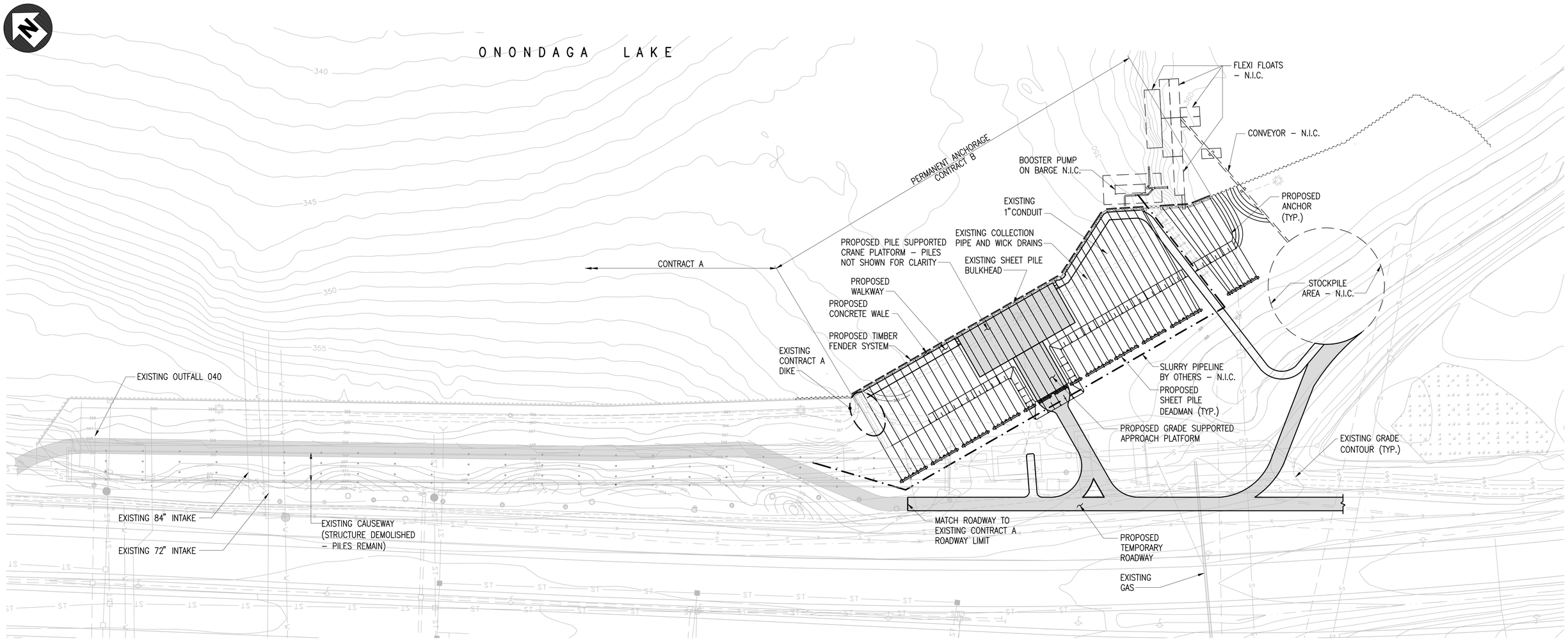

PLAN

50 25 0 50 100

SCALE: 1"=50'

DRAWING IS HALF-SIZE IF PLOTTED 11x17

HONEYWELL – RESTRICTED
PRINTS OF THIS DRAWING MAY NOT BE RELEASED WITHOUT PRIOR APPROVAL

STATE OF NEW YORK · PETER WEBSTER REYNOLDS · No. 062785-1 · LICENSED PROFESSIONAL ENGINEER

PARSONS
290 ELWOOD DAVIS ROAD, SUITE 312, LIVERPOOL, N.Y. 13088, PHONE: 315-451-9560

MUESER RUTLEDGE CONSULTING ENGINEERS
14 PENN PLAZA – 225 WEST 34th STREET
MRCE FILE NO. 9801

NOTICE

THIS DRAWING, THE PROPERTY OF HONEYWELL IS FURNISHED SUBJECT TO RETURN ON DEMAND AND THE CONDITION THAT THE INFORMATION AND TECHNOLOGY EMBODIED HEREIN SHALL NOT BE DISCLOSED OR USED AND THE DRAWING SHALL NOT BE REPRODUCED OR COPIED IN WHOLE OR IN PART EXCEPT AS PREVIOUSLY AUTHORIZED IN WRITING. ANY PERSON WHO MAY RECEIVE OR OBSERVE THIS DESIGN WILL BE HELD STRICTLY LIABLE FOR ANY VIOLATION WHETHER WILLFUL OR NEGLIGENT.

NO.	REVISION	BY	APPR.	APPR.	APPR.	APPR.	DATE	NO.	REVISION	BY	APPR.	APPR.	APPR.	APPR.	DATE

REFERENCE	DWG. NO.	APPROVALS	DATE

EQUIPMENT P.O. B/M NUMBERS:

JOB NO. _____
CONTRACTOR'S JOB NO. _____
SCALE: 1"=50'-0"

WILLIS AVE./SEMET TAR BEDS SITE IRM
SYRACUSE, NEW YORK

SHEET PILE ANCHORAGE GENERAL PLAN

Honeywell
EMS ENGINEERING DEPARTMENT
101 COLUMBIA RD. BOX 2105
MORRISTOWN, NJ 07962

C.P.	8-09-11	S.Y.	8-09-11
DRAWN	DATE	CHK.	DATE
LOCATION	SPA-002B		REV

cperez
Aug 09, 2011 at 3:49pm
G:\DWGS\98\9801\NEW CONTRACT-OPT1\Contract-B\SPA-002B.dwg

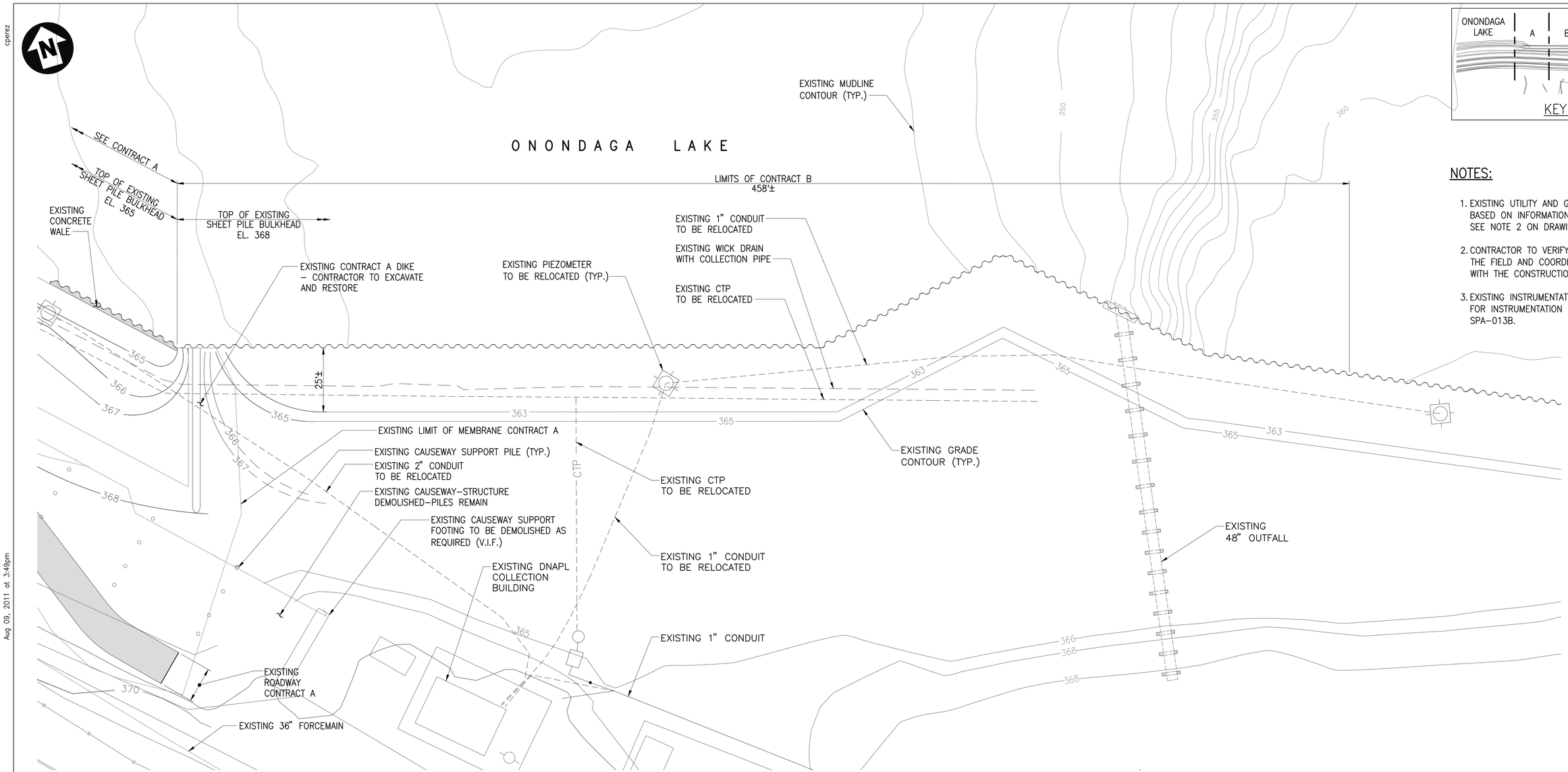

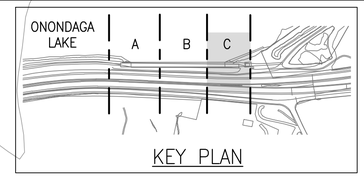

NOTES:

1. EXISTING UTILITY AND GRADE INFORMATION BASED ON INFORMATION PROVIDED BY OTHERS. SEE NOTE 2 ON DRAWING SPA–015B.
2. CONTRACTOR TO VERIFY UTILITY LOCATIONS IN THE FIELD AND COORDINATE UTILITY RELOCATION WITH THE CONSTRUCTION MANAGER.
3. EXISTING INSTRUMENTATION NOT SHOWN. FOR INSTRUMENTATION SEE DRAWING SPA–013B.

PLAN

20 10 0 20 40

SCALE: 1"=20'

DRAWING IS HALF–SIZE IF PLOTTED 11x17

HONEYWELL – RESTRICTED
PRINTS OF THIS DRAWING MAY NOT BE RELEASED WITHOUT PRIOR APPROVAL

STATE OF NEW YORK · PETER WEBSTER · No. 062785-1 · LICENSED PROFESSIONAL ENGINEER

PARSONS
290 ELWOOD DAVIS ROAD, SUITE 312, LIVERPOOL, N.Y. 13088, PHONE: 315–451–9560

MUESER RUTLEDGE CONSULTING ENGINEERS
14 PENN PLAZA – 225 WEST 34th STREET
MRCE FILE NO. 9801

NOTICE

THIS DRAWING, THE PROPERTY OF HONEYWELL IS FURNISHED SUBJECT TO RETURN ON DEMAND AND THE CONDITION THAT THE INFORMATION AND TECHNOLOGY EMBODIED HEREIN SHALL NOT BE DISCLOSED OR USED AND THE DRAWING SHALL NOT BE REPRODUCED OR COPIED IN WHOLE OR IN PART EXCEPT AS PREVIOUSLY AUTHORIZED IN WRITING. ANY PERSON WHO MAY RECEIVE OR OBSERVE THIS DESIGN WILL BE HELD STRICTLY LIABLE FOR ANY VIOLATION WHETHER WILLFUL OR NEGLIGENT.

NO.	REVISION	BY	APPR.	APPR.	APPR.	APPR.	DATE	NO.	REVISION	BY	APPR.	APPR.	APPR.	APPR.	DATE

REFERENCE	DWG. NO.	APPROVALS	DATE
		EQUIPMENT P.O. B/M NUMBERS:	

JOB NO.
CONTRACTOR'S JOB NO.
SCALE: 1"=20'–0"

WILLIS AVE./SEMET TAR BEDS SITE IRM
SYRACUSE, NEW YORK

SHEET PILE ANCHORAGE
EXISTING CONDITIONS PLAN

Honeywell
EMS ENGINEERING DEPARTMENT
101 COLUMBIA RD. BOX 2105
MORRISTOWN, NJ 07962

A.M.	8–09–11	S.Y.	8–09–11
DRAWN	DATE	CHK.	DATE
LOCATION	SPA–003B		REV

G:\DWGS\98\9801\NEW CONTRACT–OPT1\Contract–B\SPA–003B.dwg
Aug 09, 2011 at 3:49pm
cpeds

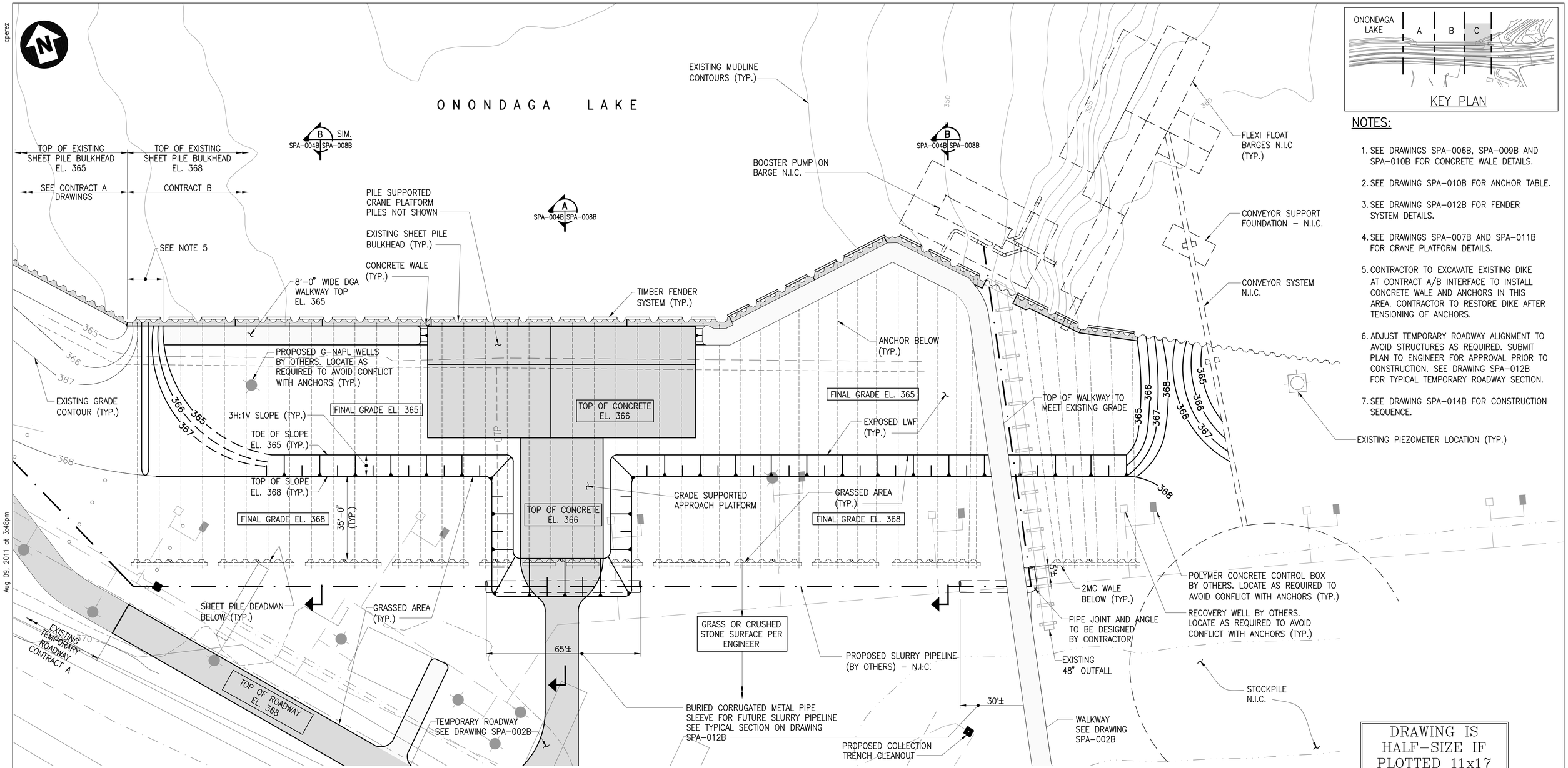

PLAN

20 10 0 20 40

SCALE: 1"=20'

KEY PLAN

NOTES:

1. SEE DRAWINGS SPA-006B, SPA-009B AND SPA-010B FOR CONCRETE WALE DETAILS.
2. SEE DRAWING SPA-010B FOR ANCHOR TABLE.
3. SEE DRAWING SPA-012B FOR FENDER SYSTEM DETAILS.
4. SEE DRAWINGS SPA-007B AND SPA-011B FOR CRANE PLATFORM DETAILS.
5. CONTRACTOR TO EXCAVATE EXISTING DIKE AT CONTRACT A/B INTERFACE TO INSTALL CONCRETE WALE AND ANCHORS IN THIS AREA. CONTRACTOR TO RESTORE DIKE AFTER TENSIONING OF ANCHORS.
6. ADJUST TEMPORARY ROADWAY ALIGNMENT TO AVOID STRUCTURES AS REQUIRED. SUBMIT PLAN TO ENGINEER FOR APPROVAL PRIOR TO CONSTRUCTION. SEE DRAWING SPA-012B FOR TYPICAL TEMPORARY ROADWAY SECTION.
7. SEE DRAWING SPA-014B FOR CONSTRUCTION SEQUENCE.

DRAWING IS HALF-SIZE IF PLOTTED 11x17

HONEYWELL – RESTRICTED
PRINTS OF THIS DRAWING MAY NOT BE RELEASED WITHOUT PRIOR APPROVAL

STATE OF NEW YORK · PETER WEBSTER REGO · No. 062785-1 · LICENSED PROFESSIONAL ENGINEER

PARSONS
290 ELWOOD DAVIS ROAD, SUITE 312, LIVERPOOL, N.Y. 13088, PHONE: 315-451-9560

MUESER RUTLEDGE CONSULTING ENGINEERS
14 PENN PLAZA – 225 WEST 34th STREET
MRCE FILE NO. 9801

NOTICE

THIS DRAWING, THE PROPERTY OF HONEYWELL IS FURNISHED SUBJECT TO RETURN ON DEMAND AND THE CONDITION THAT THE INFORMATION AND TECHNOLOGY EMBODIED HEREIN SHALL NOT BE DISCLOSED OR USED AND THE DRAWING SHALL NOT BE REPRODUCED OR COPIED IN WHOLE OR IN PART EXCEPT AS PREVIOUSLY AUTHORIZED IN WRITING. ANY PERSON WHO MAY RECEIVE OR OBSERVE THIS DESIGN WILL BE HELD STRICTLY LIABLE FOR ANY VIOLATION WHETHER WILLFUL OR NEGLIGENT.

NO.	REVISION	BY	APPR.	APPR.	APPR.	APPR.	DATE	NO.	REVISION	BY	APPR.	APPR.	APPR.	APPR.	DATE

REFERENCE	DWG. NO.	APPROVALS	DATE
		EQUIPMENT P.O. B/M NUMBERS:	

JOB NO.
CONTRACTOR'S JOB NO.
SCALE: 1"=20'-0"

WILLIS AVE./SEMET TAR BEDS SITE IRM
SYRACUSE, NEW YORK

SHEET PILE ANCHORAGE
FINAL CONDITION PLAN

Honeywell
EMS ENGINEERING DEPARTMENT
101 COLUMBIA RD. BOX 2105
MORRISTOWN, NJ 07962

C.P.	8-09-11	S.Y.	8-09-11
DRAWN	DATE	CHK.	DATE
LOCATION	SPA-004B		REV

cpetz
Aug 09, 2011 at 3:48pm
G:\DWGS\98\9801\NEW CONTRACT-OPT1\Contract-B\SPA-004B.dwg

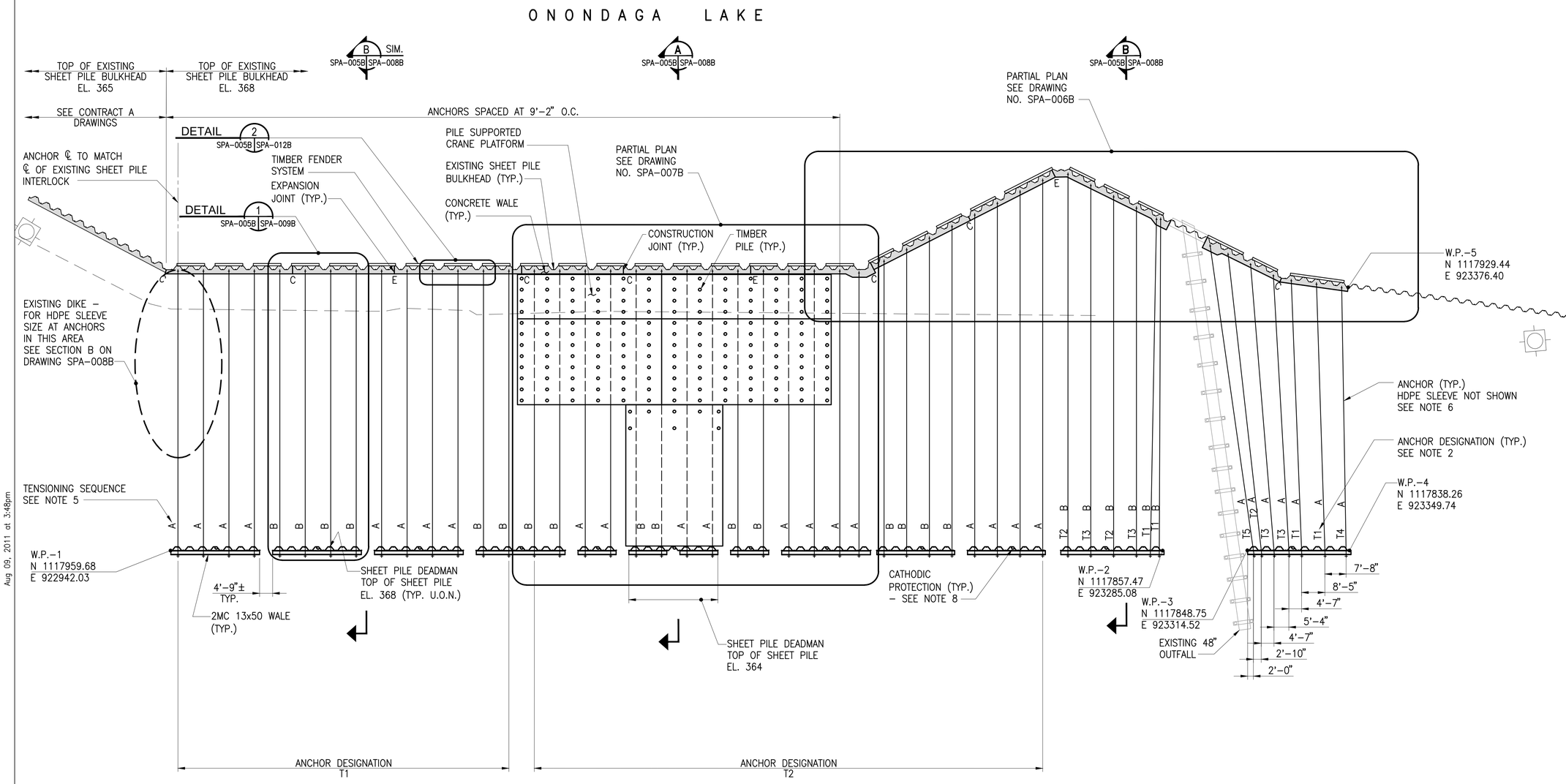

PLAN

20 10 0 20 40

SCALE: 1"=20'

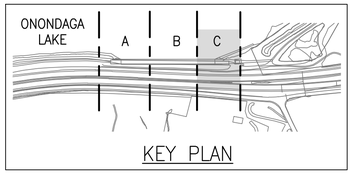

KEY PLAN

NOTES:

1. SEE DRAWINGS SPA-006B, SPA-009B AND AND SPA-010B FOR CONCRETE WALE DETAILS.
2. SEE DRAWING SPA-010B FOR ANCHOR TABLE.
3. SEE DRAWING SPA-012B FOR FENDER SYSTEM DETAILS.
4. SEE DRAWINGS SPA-007B AND SPA-011B FOR CRANE PLATFORM DETAILS.
5. TENSION ALL ANCHORS WITH IDENTICAL LABELS SIMULTANEOUSLY WITHIN A SINGLE STEEL WALE. SEE ANCHOR TENSIONING AND MONITORING NOTES ON DRAWING SPA-016B.
6. HDPE SLEEVE DIAMETER VARIES. SEE SECTIONS A AND B ON DRAWING SPA-008B AND SECTION E ON DRAWING SPA-009B.
7. DGA WALKWAY AND TEMPORARY ROADWAY NOT SHOWN FOR CLARITY.
8. CATHODIC PROTECTION TO BE INSTALLED AT ONE LOCATION PER GROUP OF SHEET PILES AS SHOWN ON THIS DRAWING. SEE DRAWING SPA-010B FOR EXISTING CATHODIC PROTECTION DETAIL. PROVIDE SIMILAR CATHODIC PROTECTION AT SHEET PILE DEADMAN.
9. SEE DRAWING SPA-014B FOR CONSTRUCTION SEQUENCE.

DRAWING IS HALF-SIZE IF PLOTTED 11x17

HONEYWELL - RESTRICTED
PRINTS OF THIS DRAWING MAY NOT BE RELEASED WITHOUT PRIOR APPROVAL

PARSONS
290 ELWOOD DAVIS ROAD, SUITE 312, LIVERPOOL, N.Y. 13088, PHONE: 315-451-9560

MUESER RUTLEDGE CONSULTING ENGINEERS
14 PENN PLAZA - 225 WEST 34th STREET
MRCE FILE NO. 9801

NOTICE

THIS DRAWING, THE PROPERTY OF HONEYWELL IS FURNISHED SUBJECT TO RETURN ON DEMAND AND THE CONDITION THAT THE INFORMATION AND TECHNOLOGY EMBODIED HEREIN SHALL NOT BE DISCLOSED OR USED AND THE DRAWING SHALL NOT BE REPRODUCED OR COPIED IN WHOLE OR IN PART EXCEPT AS PREVIOUSLY AUTHORIZED IN WRITING. ANY PERSON WHO MAY RECEIVE OR OBSERVE THIS DESIGN WILL BE HELD STRICTLY LIABLE FOR ANY VIOLATION WHETHER WILLFUL OR NEGLIGENT.

NO.	REVISION	BY	APPR.	APPR.	APPR.	APPR.	DATE	NO.	REVISION	BY	APPR.	APPR.	APPR.	APPR.	DATE

REFERENCE	DWG. NO.

APPROVALS	DATE
EQUIPMENT P.O. B/M NUMBERS:	

JOB NO.
CONTRACTOR'S JOB NO.
SCALE: 1"=20'-0"

WILLIS AVE./SEMET TAR BEDS SITE IRM
SYRACUSE, NEW YORK

SHEET PILE ANCHORAGE
DETAIL PLAN 1

Honeywell
EMS ENGINEERING DEPARTMENT
101 COLUMBIA RD. BOX 2105
MORRISTOWN, NJ 07962

C.P.	8-09-11	S.Y.	8-09-11
DRAWN	DATE	CHK.	DATE
LOCATION	SPA-005B		REV

cperez

Aug 09, 2011 at 3:48pm

G:\DWGS\98\9801\NEW CONTRACT-OPT1\Contract-B\SPA-005B.dwg

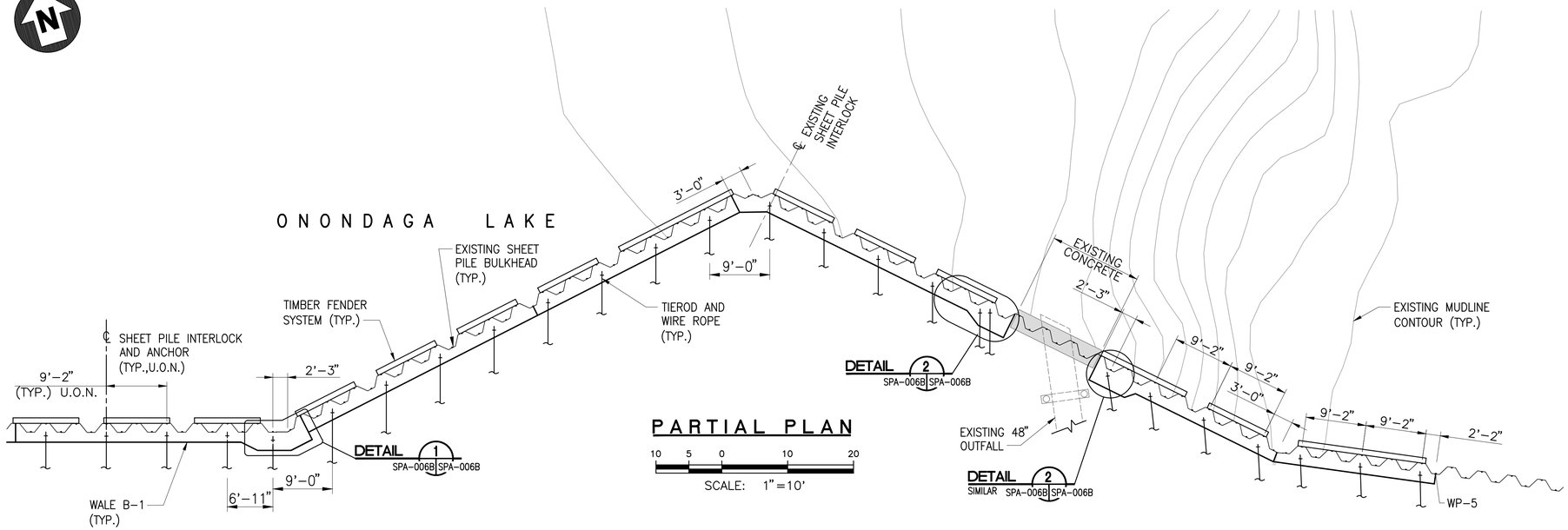

PARTIAL PLAN

10 5 0 10 20

SCALE: 1"=10'

NOTE: CRANE PLATFORM NOT SHOWN

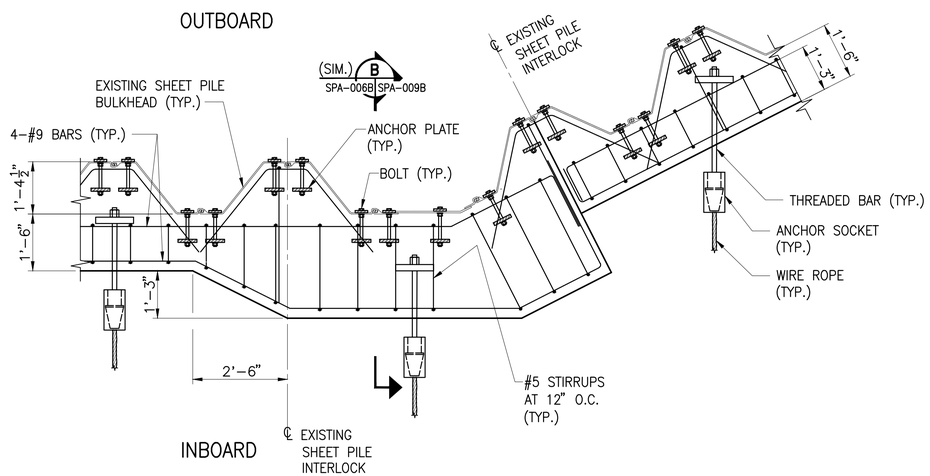

DETAIL 1
SPA-006B SPA-006B

2' 1' 0 2' 4'

SCALE: 1/2"=1'-0"

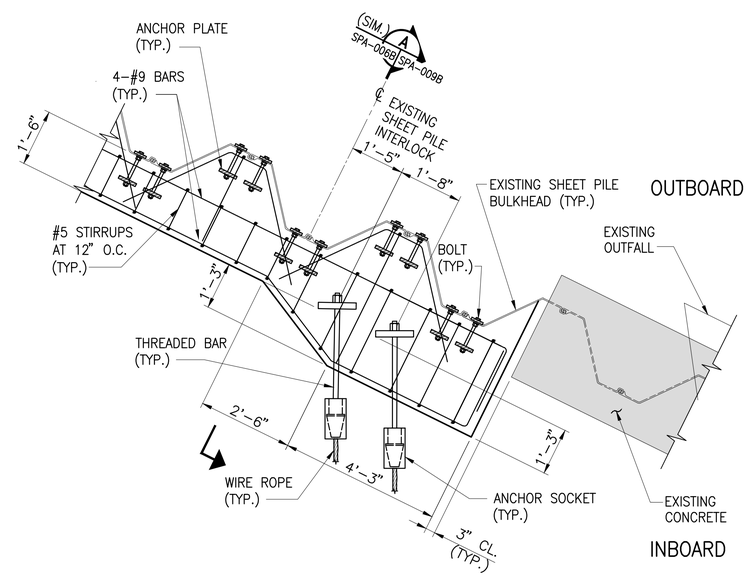

DETAIL 2
SPA-006B SPA-006B

2' 1' 0 2' 4'

SCALE: 1/2"=1'-0"

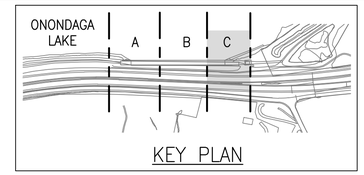

KEY PLAN

NOTES:

1. SEE DRAWINGS SPA-009B AND SPA-010B FOR CONCRETE WALE DETAILS.
2. SEE DRAWING SPA-010B FOR ANCHOR TABLE.
3. SEE DRAWING SPA-012B FOR FENDER SYSTEM DETAILS.
4. SEE DRAWINGS SPA-007B, SPA-010B AND SPA-011B FOR CRANE PLATFORM DETAILS.

DRAWING IS HALF-SIZE IF PLOTTED 11x17

HONEYWELL – RESTRICTED
PRINTS OF THIS DRAWING MAY NOT BE RELEASED WITHOUT PRIOR APPROVAL

STATE OF NEW YORK · PETER WEBSTER · No. 062765-1 · LICENSED PROFESSIONAL ENGINEER

PARSONS
290 ELWOOD DAVIS ROAD, SUITE 312, LIVERPOOL, N.Y. 13088, PHONE: 315-451-9560

MUESER RUTLEDGE CONSULTING ENGINEERS
14 PENN PLAZA – 225 WEST 34th STREET
MRCE FILE NO. 9801

NOTICE

THIS DRAWING, THE PROPERTY OF HONEYWELL IS FURNISHED SUBJECT TO RETURN ON DEMAND AND THE CONDITION THAT THE INFORMATION AND TECHNOLOGY EMBODIED HEREIN SHALL NOT BE DISCLOSED OR USED AND THE DRAWING SHALL NOT BE REPRODUCED OR COPIED IN WHOLE OR IN PART EXCEPT AS PREVIOUSLY AUTHORIZED IN WRITING. ANY PERSON WHO MAY RECEIVE OR OBSERVE THIS DESIGN WILL BE HELD STRICTLY LIABLE FOR ANY VIOLATION WHETHER WILLFUL OR NEGLIGENT.

NO.	REVISION	BY	APPR.	APPR.	APPR.	APPR.	DATE	NO.	REVISION	BY	APPR.	APPR.	APPR.	APPR.	DATE

REFERENCE	DWG. NO.	APPROVALS	DATE
		EQUIPMENT P.O. B/M NUMBERS:	

JOB NO.
CONTRACTOR'S JOB NO.
SCALE: AS SHOWN

WILLIS AVE./SEMET TAR BEDS SITE IRM
SYRACUSE, NEW YORK

SHEET PILE ANCHORAGE PARTIAL PLAN 1 AND DETAILS

Honeywell
EMS ENGINEERING DEPARTMENT
101 COLUMBIA RD. BOX 2105
MORRISTOWN, NJ 07962

A.M.	8-09-11	S.Y.	8-09-11
DRAWN	DATE	CHK.	DATE
LOCATION	SPA-006B		REV

G:\DWGS\98\9801\NEW CONTRACT-OPT1\Contract-B\SPA-006B.dwg
Aug 09, 2011 at 3:48pm
cpadc

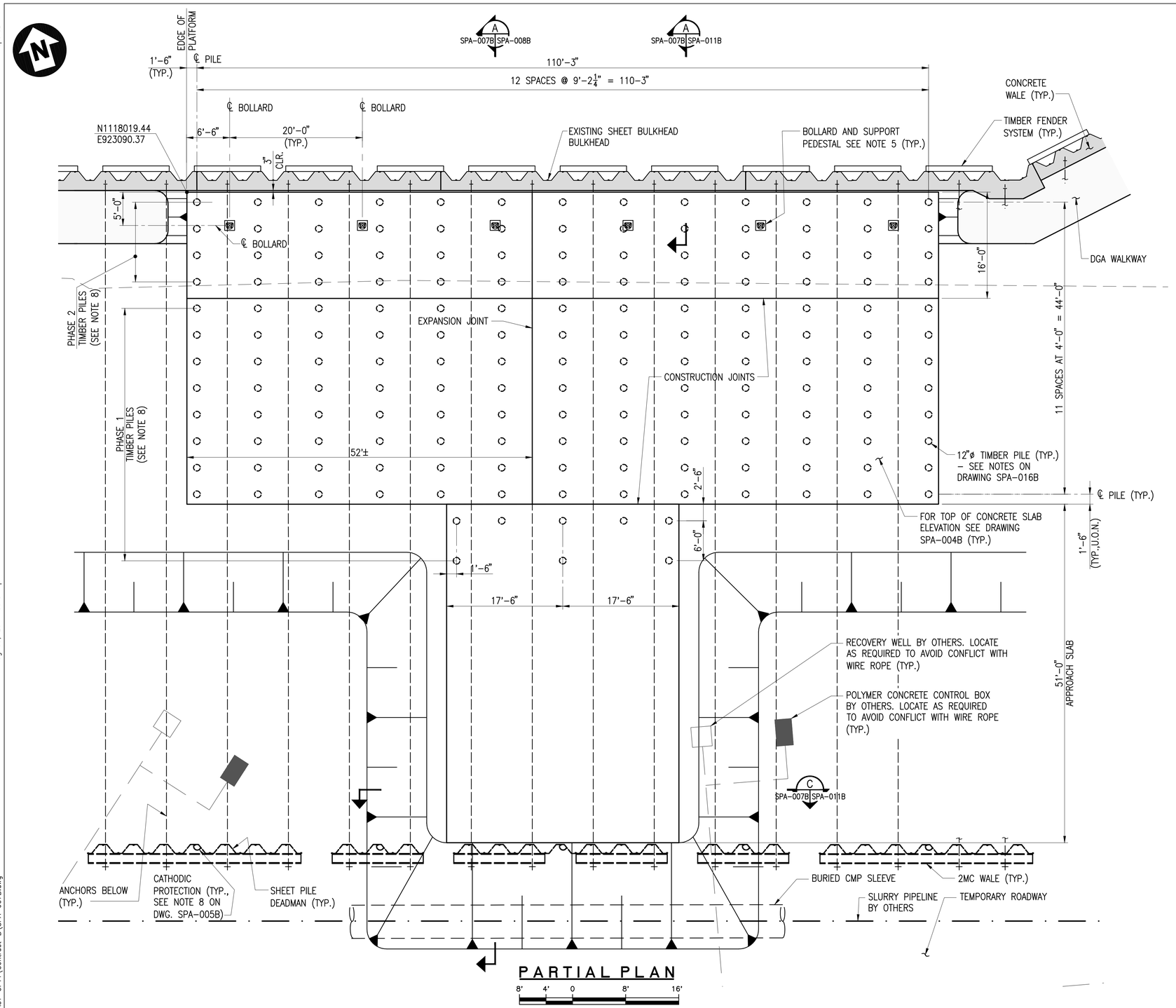

PARTIAL PLAN

SCALE: 1/8" = 1'-0"

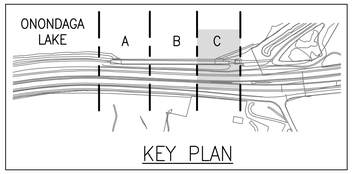

KEY PLAN

NOTES:

1. SEE DRAWINGS SPA-006B, SPA-009B AND SPA-010B FOR CONCRETE WALE DETAILS.
2. SEE DRAWING SPA-010B FOR ANCHOR TABLE.
3. SEE DRAWING SPA-012B FOR FENDER SYSTEM DETAILS.
4. SEE DRAWINGS SPA-010B AND SPA-011B FOR CRANE PLATFORM DETAILS.
5. BOLLARDS SHALL BE MSB-10 SINGLE BITT BOLLARD AS MANUFACTURED BY MARITIME INTERNATIONAL INC., OR APPROVED EQUAL.
6. SLEEVE DIAMETER VARIES. SEE SECTIONS A AND B ON DRAWING SPA-008B FOR SIZE.
7. CONTRACTOR TO PROVIDE OPENINGS IN SLAB FOR EXISTING INSTRUMENTATION ACCESS. SUBMIT SHOP DRAWINGS FOR REVIEW AND APPROVAL. SEE DRAWING SPA-013B FOR EXISTING INSTRUMENTATION.
8. SEE DRAWING SPA-014B FOR CONSTRUCTION SEQUENCE.

DRAWING IS HALF-SIZE IF PLOTTED 11x17

HONEYWELL – RESTRICTED
PRINTS OF THIS DRAWING MAY NOT BE RELEASED WITHOUT PRIOR APPROVAL

STATE OF NEW YORK · PETER WEBSTER DIXON · No. 062765-1 · LICENSED PROFESSIONAL ENGINEER

PARSONS
290 ELWOOD DAVIS ROAD, SUITE 312, LIVERPOOL, N.Y. 13088, PHONE: 315-451-9560

MUESER RUTLEDGE CONSULTING ENGINEERS
14 PENN PLAZA – 225 WEST 34th STREET
MRCE FILE NO. 9801

NOTICE

THIS DRAWING, THE PROPERTY OF HONEYWELL IS FURNISHED SUBJECT TO RETURN ON DEMAND AND THE CONDITION THAT THE INFORMATION AND TECHNOLOGY EMBODIED HEREIN SHALL NOT BE DISCLOSED OR USED AND THE DRAWING SHALL NOT BE REPRODUCED OR COPIED IN WHOLE OR IN PART EXCEPT AS PREVIOUSLY AUTHORIZED IN WRITING. ANY PERSON WHO MAY RECEIVE OR OBSERVE THIS DESIGN WILL BE HELD STRICTLY LIABLE FOR ANY VIOLATION WHETHER WILLFUL OR NEGLIGENT.

NO.	REVISION	BY	APPR.	APPR.	APPR.	APPR.	DATE	NO.	REVISION	BY	APPR.	APPR.	APPR.	APPR.	DATE

REFERENCE	DWG. NO.	APPROVALS	DATE
		EQUIPMENT P.O. B/M NUMBERS:	

JOB NO. _____
CONTRACTOR'S JOB NO. _____
SCALE: 1/8" = 1'-0"

WILLIS AVE./SEMET TAR BEDS SITE IRM
SYRACUSE, NEW YORK

SHEET PILE ANCHORAGE
PARTIAL PLAN 2

Honeywell
EMS ENGINEERING DEPARTMENT
101 COLUMBIA RD., BOX 2105
MORRISTOWN, NJ 07962

C.P.J.	8-09-11	S.Y.	8-09-11
DRAWN	DATE	CHK.	DATE
LOCATION	SPA-007B		REV

cperez
Aug 09, 2011 at 3:47pm
G:\DWGS\98\9801\NEW CONTRACT-OPT1\Contract-B\SPA-007B.dwg

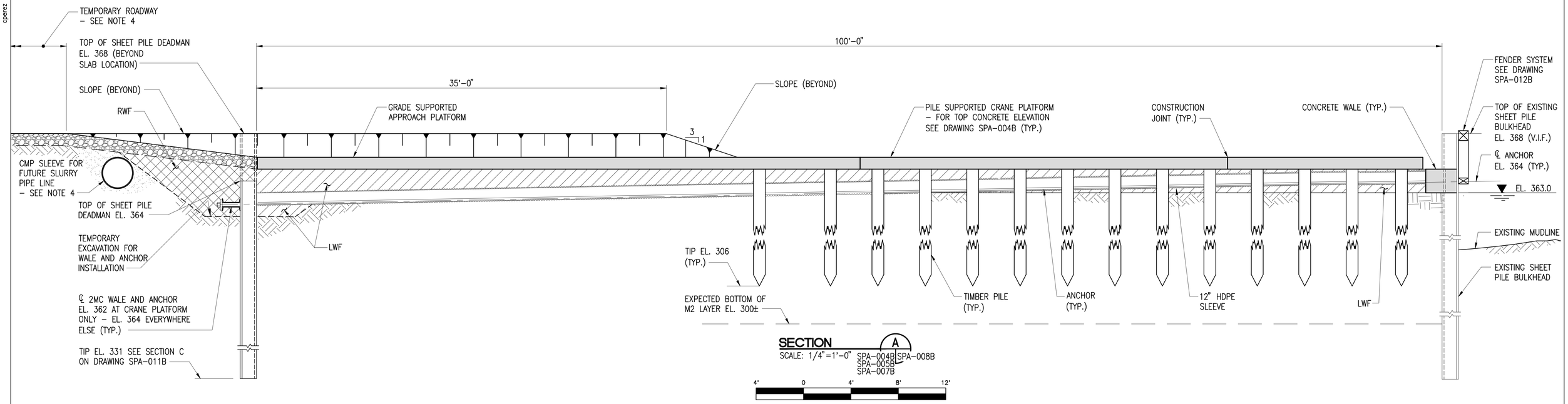

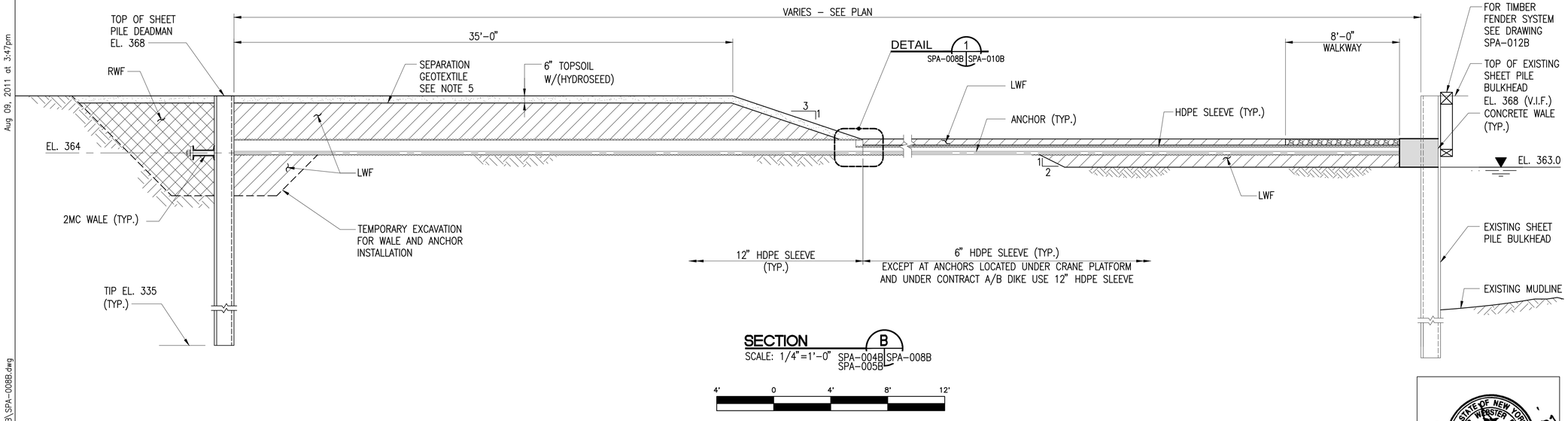

NOTES:

1. SEE DRAWINGS SPA-006B, SPA-009B AND SPA-010B FOR CONCRETE WALE DETAILS.
2. SEE DRAWING SPA-005B FOR STEEL WALE SIZE.
3. CONTRACTOR MAY INSTALL HDPE SLEEVE IN DISCRETE LENGTHS TO FACILITATE THREADING THE WIRE ROPE THROUGH THE SLEEVE.
4. SEE DRAWING SPA-012B FOR TEMPORARY ROADWAY AND CMP SLEEVE DETAIL.
5. SEE DRAWING SPA-016B FOR MATERIALS LIST.

DRAWING IS HALF-SIZE IF PLOTTED 11x17

STATE OF NEW YORK · PETER WEBSTER · No. 062785-1 · PROFESSIONAL ENGINEER

PARSONS
290 ELWOOD DAVIS ROAD, SUITE 312, LIVERPOOL, N.Y. 13088, PHONE: 315-451-9560

MUESER RUTLEDGE CONSULTING ENGINEERS
14 PENN PLAZA – 225 WEST 34th STREET
MRCE FILE NO. 9801

NOTICE

THIS DRAWING, THE PROPERTY OF HONEYWELL IS FURNISHED SUBJECT TO RETURN ON DEMAND AND THE CONDITION THAT THE INFORMATION AND TECHNOLOGY EMBODIED HEREIN SHALL NOT BE DISCLOSED OR USED AND THE DRAWING SHALL NOT BE REPRODUCED OR COPIED IN WHOLE OR IN PART EXCEPT AS PREVIOUSLY AUTHORIZED IN WRITING. ANY PERSON WHO MAY RECEIVE OR OBSERVE THIS DESIGN WILL BE HELD STRICTLY LIABLE FOR ANY VIOLATION WHETHER WILLFUL OR NEGLIGENT.

NO.	REVISION	BY	APPR.	APPR.	APPR.	APPR.	DATE	NO.	REVISION	BY	APPR.	APPR.	APPR.	APPR.	DATE

REFERENCE	DWG. NO.

APPROVALS	DATE
EQUIPMENT P.O. B/M NUMBERS:	

JOB NO.
CONTRACTOR'S JOB NO.
SCALE: AS SHOWN

Honeywell
EMS ENGINEERING DEPARTMENT
101 COLUMBIA RD. BOX 2105
MORRISTOWN, NJ 07962

WILLIS AVE./SEMET TAR BEDS SITE IRM
SYRACUSE, NEW YORK

SHEET PILE ANCHORAGE SECTIONS

A.M.	8-09-11	S.Y.	8-09-11
DRAWN	DATE	CHK.	DATE
LOCATION	SPA-008B		REV

G:\DWGS\98\9801\NEW CONTRACT-OPT1\Contract-B\SPA-008B.dwg
Aug 09, 2011 at 3:47pm
cpdez

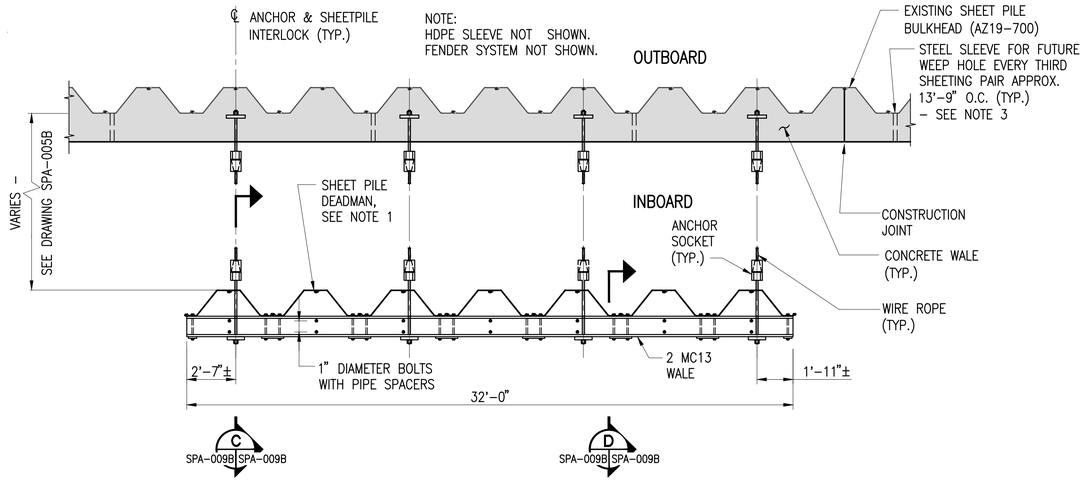

DETAIL 1 SPA-005B SPA-009B

SCALE: 1/4"=1'-0"

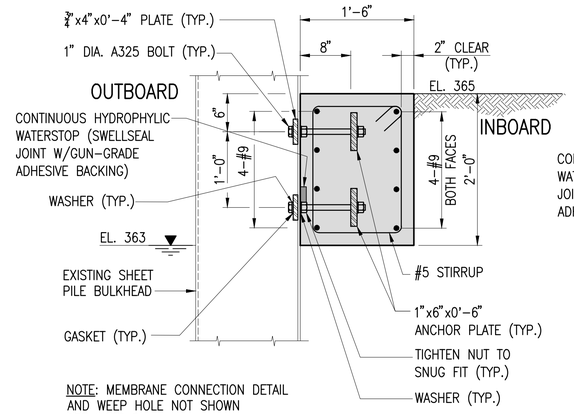

NOTE: MEMBRANE CONNECTION DETAIL AND WEEP HOLE NOT SHOWN SEE NOTE 3.

SECTION A SPA-006B SPA-009B SPA-009B

SCALE: 1"=1'-0"

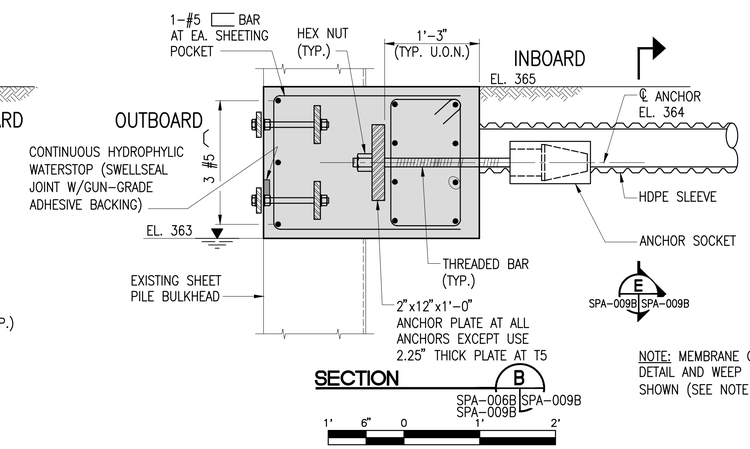

NOTE: MEMBRANE CONNECTION DETAIL AND WEEP HOLE NOT SHOWN (SEE NOTE 3).

SECTION B SPA-006B SPA-009B SPA-009B

SCALE: 1"=1'-0"

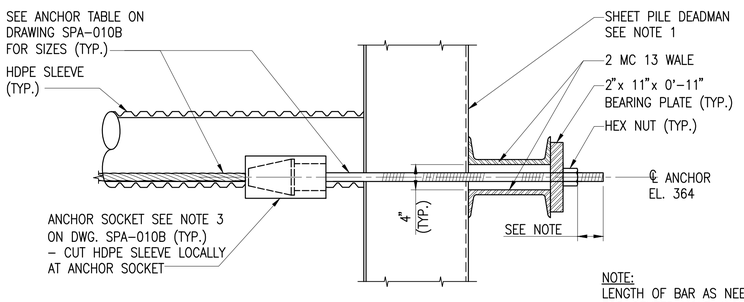

NOTE: LENGTH OF BAR AS NEEDED FOR CENTER HOLE JACK.

SECTION C SPA-009B SPA-009B

SCALE: 1"=1'-0"

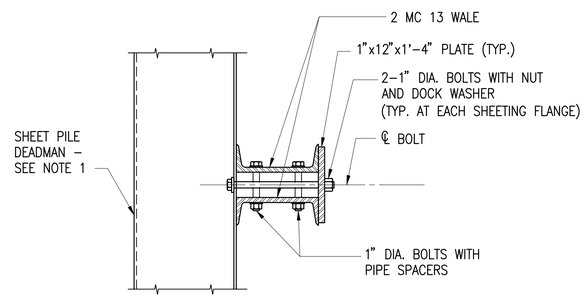

SECTION D SPA-009B SPA-009B

SCALE: 1"=1'-0"

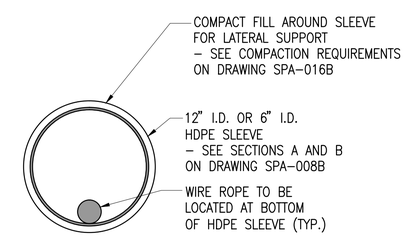

SECTION E N.T.S. SPA-009B SPA-009B

NOTES:

1. SEE NOTE 1 UNDER TECHNICAL REQUIREMENTS ON DRAWING SPA-015B FOR SHEET PILE SIZE.
2. SEE DRAWING SPA-005B FOR TENSIONING SEQUENCE .
3. SEE DRAWING SPA-010B FOR MEMBRANE CONNECTION AND FUTURE WEEP HOLE DETAIL .
4. SEE DRAWING SPA-016B FOR MATERIAL LIST .
5. SEE NOTES 24 AND 25 ON DRAWING SPA-015B FOR BOLT HOLE REQUIREMENTS.

DETAIL 1 SPA-009B SPA-010B

NOTE * VARIES DUE TO SHEET DEFLECTION

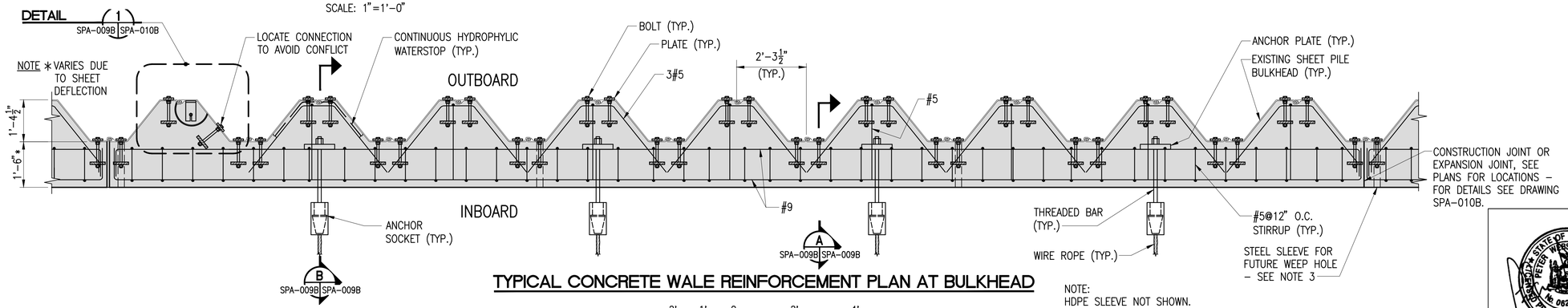

TYPICAL CONCRETE WALE REINFORCEMENT PLAN AT BULKHEAD

2' 1' 0 2' 4'

SCALE: 1/2"=1'-0"

NOTE: HDPE SLEEVE NOT SHOWN.

DRAWING IS HALF-SIZE IF PLOTTED 11x17

HONEYWELL – RESTRICTED
PRINTS OF THIS DRAWING MAY NOT BE RELEASED WITHOUT PRIOR APPROVAL

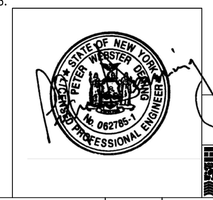

PARSONS
290 ELWOOD DAVIS ROAD, SUITE 312, LIVERPOOL, N.Y. 13088, PHONE: 315-451-9560

MUESER RUTLEDGE CONSULTING ENGINEERS
14 PENN PLAZA – 225 WEST 34th STREET
MRCE FILE NO. 9801

NOTICE

THIS DRAWING, THE PROPERTY OF HONEYWELL IS FURNISHED SUBJECT TO RETURN ON DEMAND AND THE CONDITION THAT THE INFORMATION AND TECHNOLOGY EMBODIED HEREIN SHALL NOT BE DISCLOSED OR USED AND THE DRAWING SHALL NOT BE REPRODUCED OR COPIED IN WHOLE OR IN PART EXCEPT AS PREVIOUSLY AUTHORIZED IN WRITING. ANY PERSON WHO MAY RECEIVE OR OBSERVE THIS DESIGN WILL BE HELD STRICTLY LIABLE FOR ANY VIOLATION WHETHER WILLFUL OR NEGLIGENT.

NO.	REVISION	BY	APPR.	APPR.	APPR.	APPR.	DATE	NO.	REVISION	BY	APPR.	APPR.	APPR.	APPR.	DATE	REFERENCE	DWG. NO.	APPROVALS	DATE

EQUIPMENT P.O. B/M NUMBERS:

JOB NO. ____
CONTRACTOR'S JOB NO. ____
SCALE: AS SHOWN

WILLIS AVE./SEMET TAR BEDS SITE IRM
SYRACUSE, NEW YORK

SHEET PILE ANCHORAGE SECTIONS AND DETAILS 1

Honeywell
EMS ENGINEERING DEPARTMENT
101 COLUMBIA RD. BOX 2105
MORRISTOWN, NJ 07962

C.P.J.	8-09-11	S.Y.	8-09-11
DRAWN	DATE	CHK.	DATE
LOCATION	SPA-009B		REV

cperez
Aug 09, 2011 at 3:46pm
G:\DWGS\98\9801\NEW CONTRACT-OPT1\Contract-B\SPA-009B.dwg

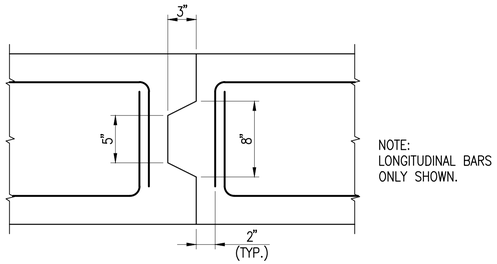

NOTE:
LONGITUDINAL BARS ONLY SHOWN.

TYP. CONCRETE WALE CONSTRUCTION JOINT - PLAN

SCALE: 1-1/2"=1'-0"

1' 8" 4" 0 1'

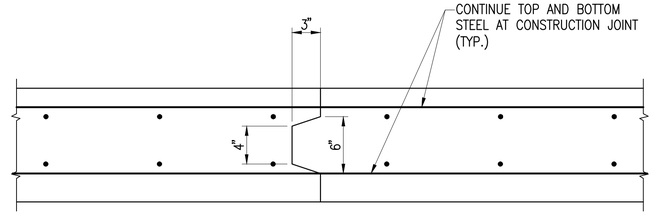

TYP. CONCRETE SLAB CONSTRUCTION JOINT - SECTION

SCALE: 1-1/2"=1'-0"

1' 8" 4" 0 1'

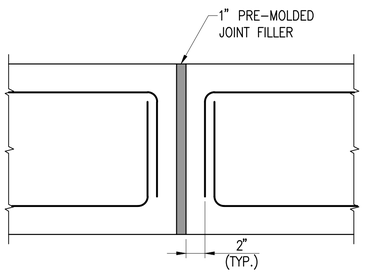

NOTE:
LONGITUDINAL BARS ONLY SHOWN.

TYP. CONCRETE WALE EXPANSION JOINT - PLAN

SCALE: 1-1/2"=1'-0"

1' 8" 4" 0 1'

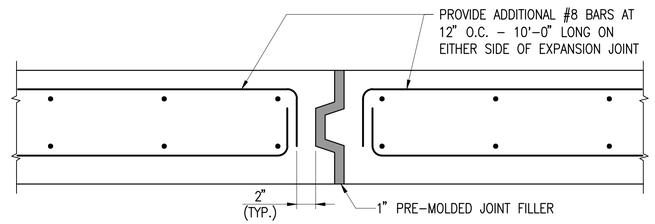

TYP. CONCRETE SLAB EXPANSION JOINT - SECTION

SCALE: 1-1/2"=1'-0"

1' 8" 4" 0 1'

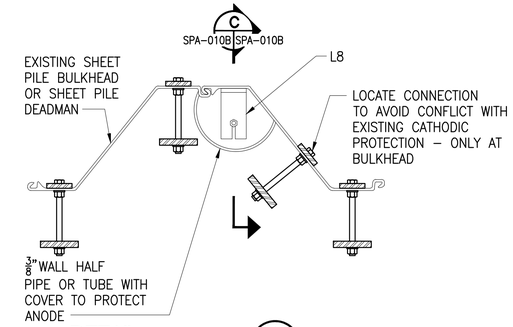

DETAIL 1
N.T.S. SPA-009B SPA-010B

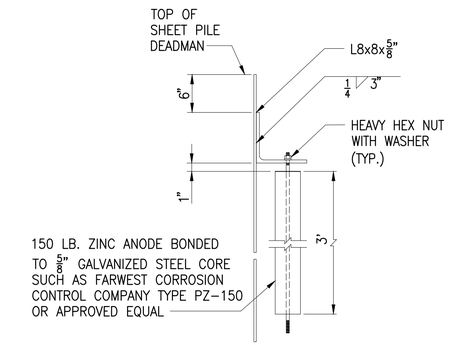

SECTION C
N.T.S. SPA-010B SPA-010B

TYPICAL EXISTING AND PROPOSED CATHODIC PROTECTION DETAIL

ANCHOR TABLE

ANCHOR DESIGNATION	WIRE ROPE DIAMETER (INCHES)	THREADED BAR DIAMETER (INCHES)	DESIGN LOAD (KIPS)	LOCK OFF LOAD (KIPS)
T1	2.5 in. - 6x19 CLASSIFICATION	1.375	100	50
T2		2.25	120	60
T3		1.375	90	45
T4		1.375	70	35
T5	3.125 in. - 6x36 CLASSIFICATION	2.25	170	85

NOTES:

1. ALL WIRE ROPE SHALL BE EXTRA IMPROVED PLOW STEEL IWRC. SEE NOTE 18 ON DRAWING SPA-015B.
2. ALL THREADED BAR SHALL BE GALVANIZED AND CONFIRM TO ASTM A615 GRADE 75 (FY=75 KSI).
3. ANCHOR SOCKET SHALL BE TYPE 6 ANCHOR SOCKET FOR THE SPECIFIED WIRE ROPE DIAMETER AT EACH ANCHOR AS MANUFACTURED BY MUNCY MACHINE/UPSON-WALTON OF MUNCY, PA 17756 OR APPROVED EQUAL. ANCHOR SOCKET SHALL INCLUDE A MANUFACTURED INSERT TO MAKE UP FOR THE SMALLER THREADED BAR DIAMETER. ANCHOR SOCKET SHALL BE GALVANIZED.

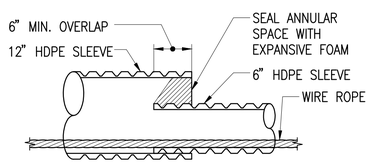

DETAIL 1
SCALE: 1"=1'-0" SPA-008B SPA-010B

1' 6" 0 1' 2'

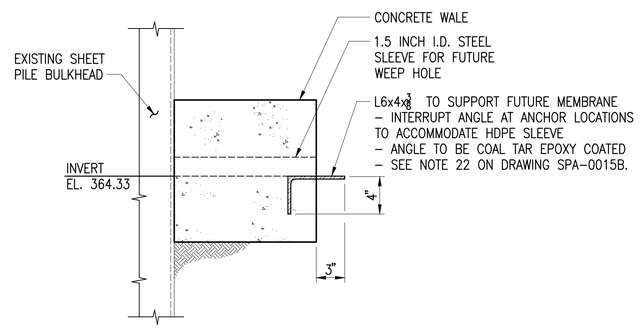

TYP. MEMBRANE CONNECTION DETAIL

SCALE: 1-1/2"=1'-0"

1' 8" 4" 0 1'

DRAWING IS HALF-SIZE IF PLOTTED 11x17

HONEYWELL - RESTRICTED
PRINTS OF THIS DRAWING MAY NOT BE RELEASED WITHOUT PRIOR APPROVAL

STATE OF NEW YORK · PETER WEBSTER LEGG · No. 062765-1 · PROFESSIONAL ENGINEER

PARSONS
290 ELWOOD DAVIS ROAD, SUITE 312, LIVERPOOL, N.Y. 13088, PHONE: 315-451-9560

MUESER RUTLEDGE CONSULTING ENGINEERS
14 PENN PLAZA - 225 WEST 34th STREET
MRCE FILE NO. 9801

NOTICE

THIS DRAWING, THE PROPERTY OF HONEYWELL IS FURNISHED SUBJECT TO RETURN ON DEMAND AND THE CONDITION THAT THE INFORMATION AND TECHNOLOGY EMBODIED HEREIN SHALL NOT BE DISCLOSED OR USED AND THE DRAWING SHALL NOT BE REPRODUCED OR COPIED IN WHOLE OR IN PART EXCEPT AS PREVIOUSLY AUTHORIZED IN WRITING. ANY PERSON WHO MAY RECEIVE OR OBSERVE THIS DESIGN WILL BE HELD STRICTLY LIABLE FOR ANY VIOLATION WHETHER WILLFUL OR NEGLIGENT.

NO.	REVISION	BY	APPR.	APPR.	APPR.	APPR.	DATE	NO.	REVISION	BY	APPR.	APPR.	APPR.	APPR.	DATE

REFERENCE	DWG. NO.	APPROVALS	DATE
		EQUIPMENT P.O. B/M NUMBERS:	

JOB NO. ____
CONTRACTOR'S JOB NO. ____
SCALE: AS SHOWN

WILLIS AVE./SEMET TAR BEDS SITE IRM
SYRACUSE, NEW YORK

SHEET PILE ANCHORAGE SECTION AND DETAILS 2

Honeywell
EMS ENGINEERING DEPARTMENT
101 COLUMBIA RD., BOX 2105
MORRISTOWN, NJ 07962

DRAWN	DATE	CHK.	DATE
K.J.	8-09-11	S.Y.	8-09-11

LOCATION: SPA-010B
REV

cperez
Aug 09, 2011 at 3:46pm
G:\DWGS\98\9801\NEW CONTRACT-OPT1\Contract-B\SPA-010B.dwg

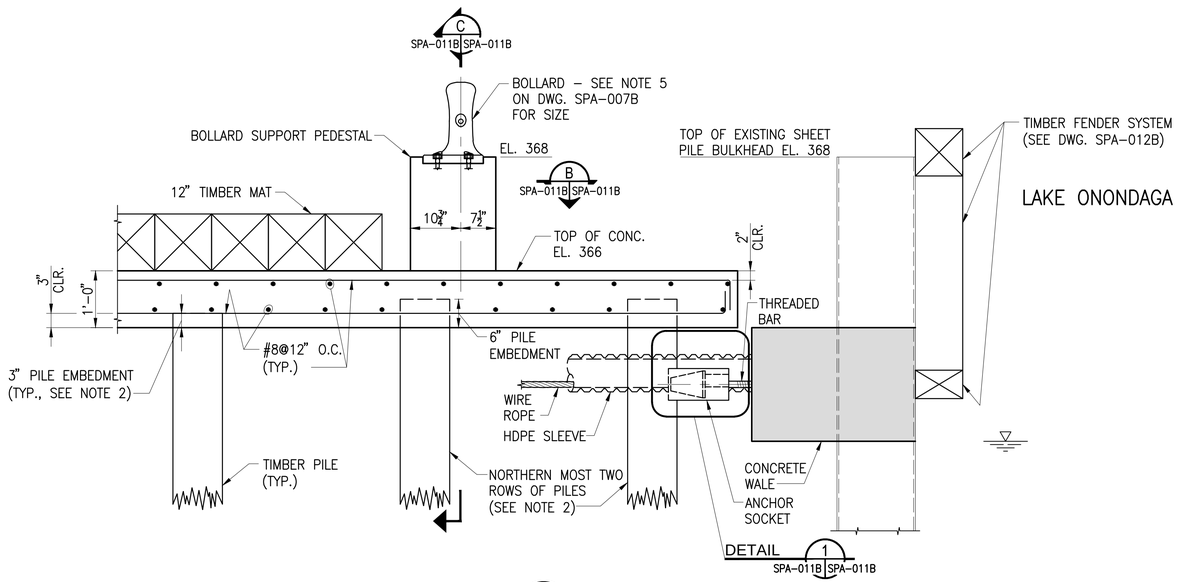

SECTION A
SCALE: 3/4"=1'-0" SPA-007B SPA-011B

1' 0 1' 2' 3'

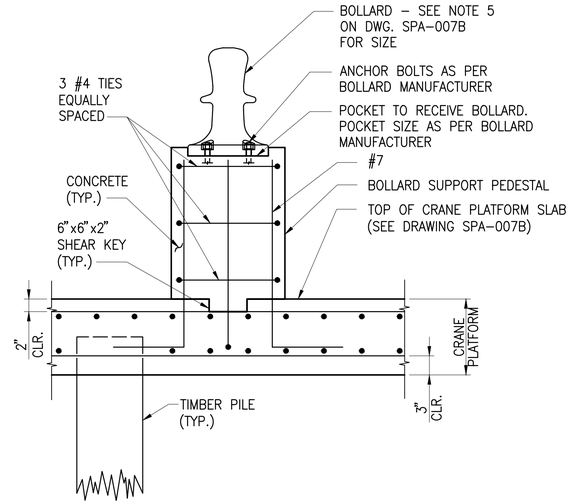

SECTION C
SCALE: 1"=1'-0" SPA-011B SPA-011B

1' 6" 0 1' 2'

SCALE: 1"=1'-0"

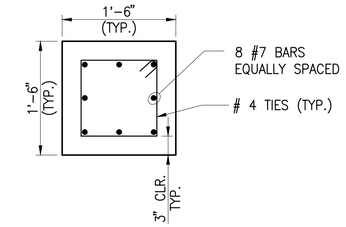

SECTION B
SCALE: 1"=1'-0" SPA-011B SPA-011B

1' 6" 0 1' 2'

SCALE: 1"=1'-0"

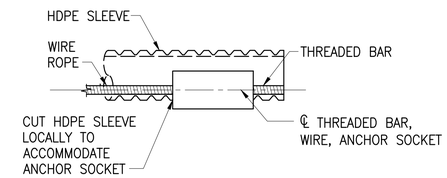

DETAIL 1
SCALE: 1"=1'-0" SPA-011B SPA-011B

1' 6" 0 1' 2'

SCALE: 1"=1'-0"

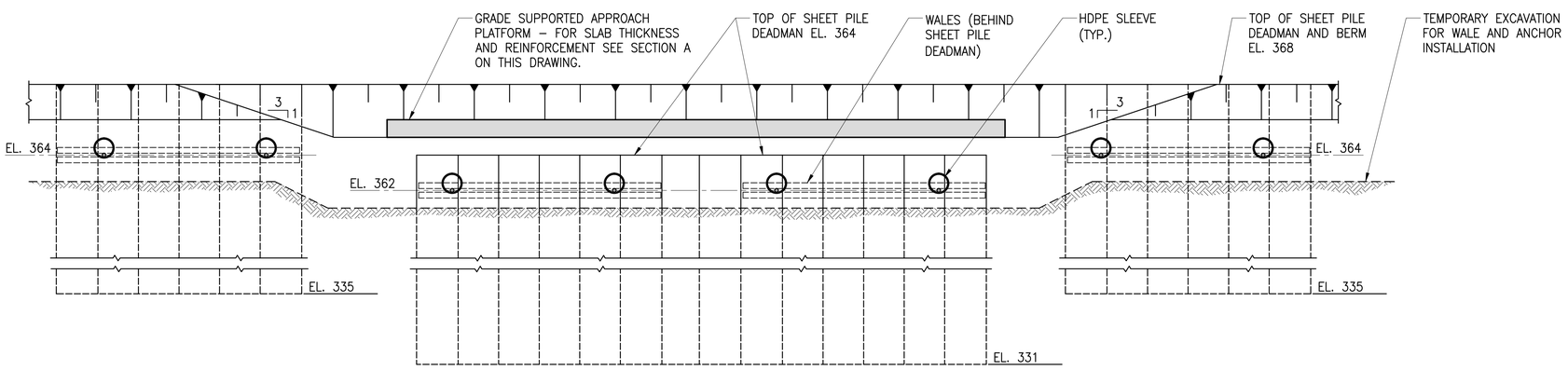

SECTION C
SCALE: 1/4"=1'-0" SPA-007B SPA-011B

4' 0 4' 8' 12'

NOTES:

1. SEE DRAWING SPA-010B FOR EXPANSION AND CONSTRUCTION JOINT DETAILS.
2. PILE EMBEDMENT INTO SLAB IS 3" EXCEPT FOR THE NORTHERN MOST TWO ROWS OF PILES WHERE THE PILE EMBEDMENT INTO CONCRETE SLAB IS 6" AS SHOWN ON SECTION A ON THIS DRAWING.

DRAWING IS HALF-SIZE IF PLOTTED 11x17

HONEYWELL – RESTRICTED
PRINTS OF THIS DRAWING MAY NOT BE RELEASED WITHOUT PRIOR APPROVAL

STATE OF NEW YORK · PETER WEBSTER · No. 062765-1 · LICENSED PROFESSIONAL ENGINEER

PARSONS
290 ELWOOD DAVIS ROAD, SUITE 312, LIVERPOOL, N.Y. 13088, PHONE: 315-451-9560

MUESER RUTLEDGE CONSULTING ENGINEERS
14 PENN PLAZA – 225 WEST 34th STREET
MRCE FILE NO. 9801

NOTICE

THIS DRAWING, THE PROPERTY OF HONEYWELL IS FURNISHED SUBJECT TO RETURN ON DEMAND AND THE CONDITION THAT THE INFORMATION AND TECHNOLOGY EMBODIED HEREIN SHALL NOT BE DISCLOSED OR USED AND THE DRAWING SHALL NOT BE REPRODUCED OR COPIED IN WHOLE OR IN PART EXCEPT AS PREVIOUSLY AUTHORIZED IN WRITING. ANY PERSON WHO MAY RECEIVE OR OBSERVE THIS DESIGN WILL BE HELD STRICTLY LIABLE FOR ANY VIOLATION WHETHER WILLFUL OR NEGLIGENT.

NO.	REVISION	BY	APPR.	APPR.	APPR.	APPR.	DATE	NO.	TYPICAL REVISION	BY	APPR.	APPR.	APPR.	APPR.	DATE	REFERENCE	DWG. NO.	APPROVALS	DATE

EQUIPMENT P.O. B/M NUMBERS:

JOB NO.
CONTRACTOR'S JOB NO.
SCALE: AS SHOWN

WILLIS AVE./SEMET TAR BEDS SITE IRM
SYRACUSE, NEW YORK

SHEET PILE ANCHORAGE
SECTION AND DETAILS 3

Honeywell
EMS ENGINEERING DEPARTMENT
101 COLUMBIA RD., BOX 2105
MORRISTOWN, NJ 07962

K.J.	8-09-11	S.Y.	8-09-11
DRAWN	DATE	CHK.	DATE
LOCATION	SPA-011B		REV

cperez
Aug 09, 2011 at 3:41pm
G:\DWGS\98\9801\NEW CONTRACT-OPT1\Contract-B\SPA-011B.dwg

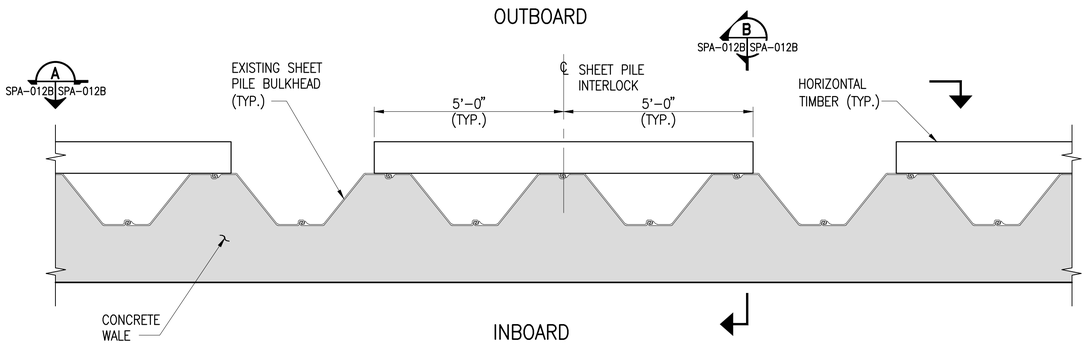

FENDER SYSTEM PART PLAN

SCALE: 1/2"=1'-0"

2' 1' 0 2' 4'

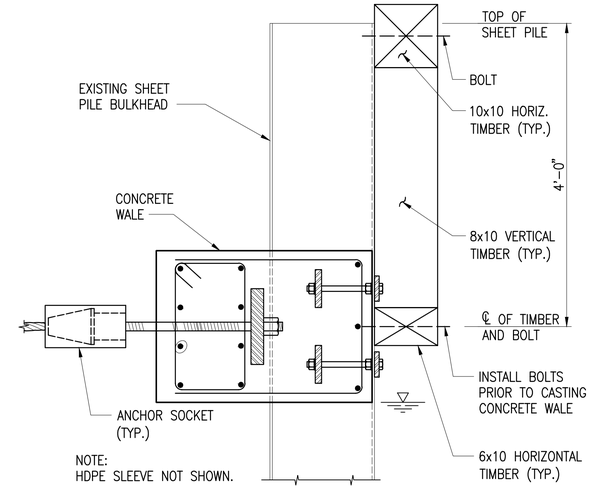

SECTION B

SCALE: 1"=1'-0" SPA-012B SPA-012B

1' 6" 0 1' 2'

NOTES:

1. SEE DRAWING SPA-016B FOR MATERIALS LIST.
2. SEE DRAWING SPA-16B FOR FENDER SYSTEM NOTES.

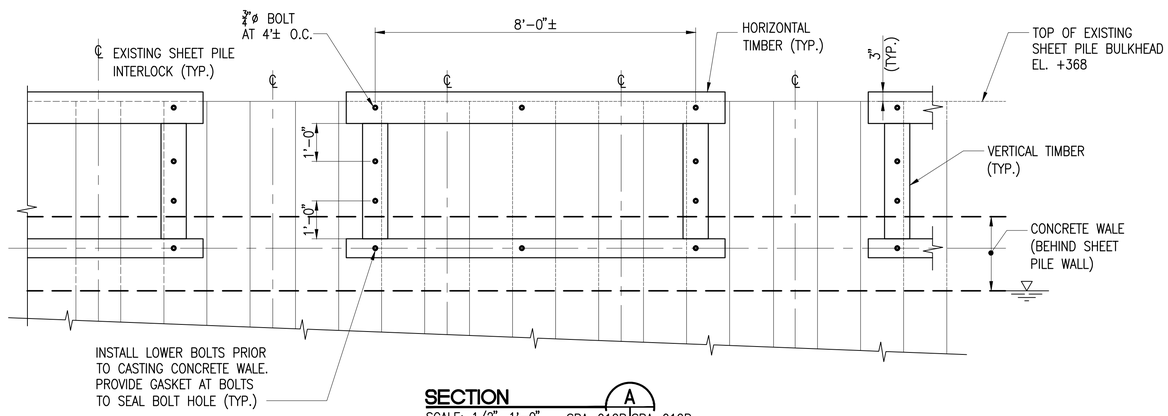

SECTION A

SCALE: 1/2"=1'-0" SPA-012B SPA-012B

2' 1' 0 2' 4'

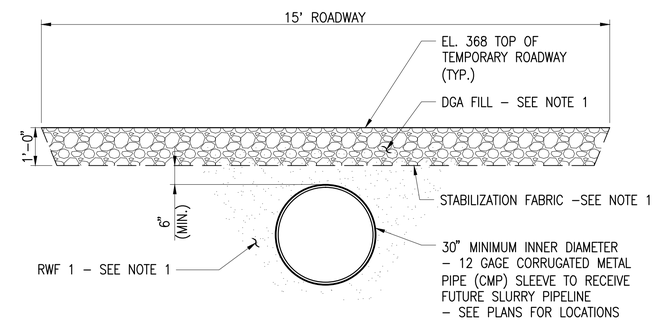

TYPICAL TEMPOARY ROADWAY SECTION

SCALE: 1/2"–1'-0"

2' 1' 0 2' 4'

DRAWING IS HALF-SIZE IF PLOTTED 11x17

HONEYWELL – RESTRICTED
PRINTS OF THIS DRAWING MAY NOT BE RELEASED WITHOUT PRIOR APPROVAL

PARSONS
290 ELWOOD DAVIS ROAD, SUITE 312, LIVERPOOL, N.Y. 13088, PHONE: 315-451-9560

MUESER RUTLEDGE CONSULTING ENGINEERS
14 PENN PLAZA – 225 WEST 34th STREET
MRCE FILE NO. 9801

NOTICE

THIS DRAWING, THE PROPERTY OF HONEYWELL IS FURNISHED SUBJECT TO RETURN ON DEMAND AND THE CONDITION THAT THE INFORMATION AND TECHNOLOGY EMBODIED HEREIN SHALL NOT BE DISCLOSED OR USED AND THE DRAWING SHALL NOT BE REPRODUCED OR COPIED IN WHOLE OR IN PART EXCEPT AS PREVIOUSLY AUTHORIZED IN WRITING. ANY PERSON WHO MAY RECEIVE OR OBSERVE THIS DESIGN WILL BE HELD STRICTLY LIABLE FOR ANY VIOLATION WHETHER WILLFUL OR NEGLIGENT.

NO.	REVISION	BY	APPR.	APPR.	APPR.	APPR.	DATE	NO.	REVISION	BY	APPR.	APPR.	APPR.	APPR.	DATE

REFERENCE	DWG. NO.

APPROVALS	DATE
EQUIPMENT P.O. B/M NUMBERS:	

JOB NO. _____
CONTRACTOR'S JOB NO. _____
SCALE: AS SHOWN

Honeywell
EMS ENGINEERING DEPARTMENT
101 COLUMBIA RD., BOX 2105
MORRISTOWN, NJ 07962

WILLIS AVE./SEMET TAR BEDS SITE IRM
SYRACUSE, NEW YORK

SHEET PILE ANCHORAGE SECTION AND DETAILS 4

K.J.	8-09-11	S.Y.	8-09-11
DRAWN	DATE	CHK.	DATE
LOCATION	SPA-012B		REV

G:\DWGS\98\9801\NEW CONTRACT-OPT1\Contract-B\SPA-012B.dwg
Aug 09, 2011 at 3:40pm
c2pdf2

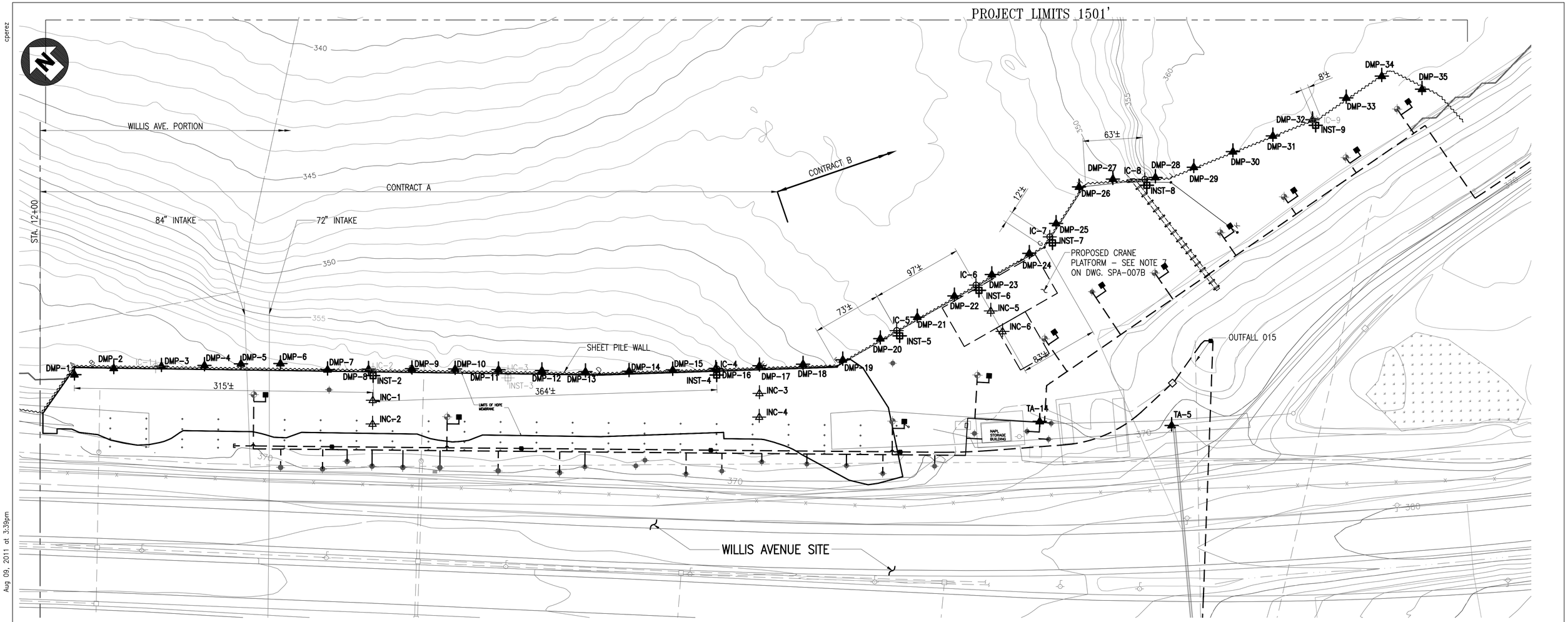

PLAN

50 25 0 50 100

SCALE: 1"=50'

LEGEND:

- DNAPL RECOVERY SYSTEM – EXISTING AND FUTURE
- DMP-13 – DEFORMATION MONITORING POINT
- IC-6 – WALL INSTRUMENTATION LOCATION (2008)
- INST-7 – SOIL INSTRUMENTATION LOCATION (2008)
- INC-6 – SAA LOCATION (2011)
- INST-3 IC-1 – NONFUNCTIONAL INCLINOMETER CASING
- MANHOLE

NOTES:

1. RE-ESTABLISH DMP POINTS OBSCURED BY CASTING CONCRETE WALE BY CASTING SUITABLE MARKER INTO WALE.
2. WALL INSTRUMENTATION LOCATIONS (IC) INCLUDE INCLINOMETER CASING.
3. SOIL INSTRUMENT LOCATIONS (INST) INCLUDE GROUTED-IN-PLACE PIEZOMETERS, INCLINOMETER CASING AND EXTENSOMETER RINGS.
4. NONFUNCTIONAL INCLINOMETER CASING SHALL BE BACKFILLED AND SEALED IN WITH CEMENT-BENTONITE GROUT PLACED WITH TREMIE.
5. WATERTIGHT CAP SHALL BE PLACED IN EXISTING INCLINOMETER CASING.
6. CONTRACTOR TO ALLOW ACCESS TO EXISTING INSTRUMENTATION FOR READINGS BY ENGINEERS. INSTRUMENTS DAMAGED BY CONSTRUCTION WILL BE REPLACED IN-KIND AT THE EXPENSE OF THE CONTRACTOR.

DRAWING IS HALF-SIZE IF PLOTTED 11x17

HONEYWELL – RESTRICTED
PRINTS OF THIS DRAWING MAY NOT BE RELEASED WITHOUT PRIOR APPROVAL

STATE OF NEW YORK · PETER WEBSTER DEBNO · No. 062785-1 · LICENSED PROFESSIONAL ENGINEER

PARSONS
290 ELWOOD DAVIS ROAD, SUITE 312, LIVERPOOL, N.Y. 13088, PHONE: 315-451-9560

MUESER RUTLEDGE CONSULTING ENGINEERS
14 PENN PLAZA – 225 WEST 34th STREET
MRCE FILE NO. 9801

NOTICE

THIS DRAWING, THE PROPERTY OF HONEYWELL IS FURNISHED SUBJECT TO RETURN ON DEMAND AND THE CONDITION THAT THE INFORMATION AND TECHNOLOGY EMBODIED HEREIN SHALL NOT BE DISCLOSED OR USED AND THE DRAWING SHALL NOT BE REPRODUCED OR COPIED IN WHOLE OR IN PART EXCEPT AS PREVIOUSLY AUTHORIZED IN WRITING. ANY PERSON WHO MAY RECEIVE OR OBSERVE THIS DESIGN WILL BE HELD STRICTLY LIABLE FOR ANY VIOLATION WHETHER WILLFUL OR NEGLIGENT.

NO.	REVISION	BY	APPR.	APPR.	APPR.	APPR.	DATE	NO.	REVISION	BY	APPR.	APPR.	APPR.	APPR.	DATE	REFERENCE	DWG. NO.	APPROVALS	DATE

EQUIPMENT P.O. B/M NUMBERS:

JOB NO.

CONTRACTOR'S JOB NO.

SCALE: 1"=50'-0"

WILLIS AVE./SEMET TAR BEDS SITE IRM
SYRACUSE, NEW YORK

EXISTING INSTRUMENTATION PLAN AND NOTES

Honeywell
EMS ENGINEERING DEPARTMENT
101 COLUMBIA RD. BOX 2105
MORRISTOWN, NJ 07962

E.C.	8-09-11	S.Y.	8-09-11
DRAWN	DATE	CHK.	DATE
LOCATION	SPA-013B		REV

cperez

Aug 09, 2011 at 3:39pm

G:\DWGS\98\9801\NEW CONTRACT-OPT1\Contract-B\SPA-013B.dwg

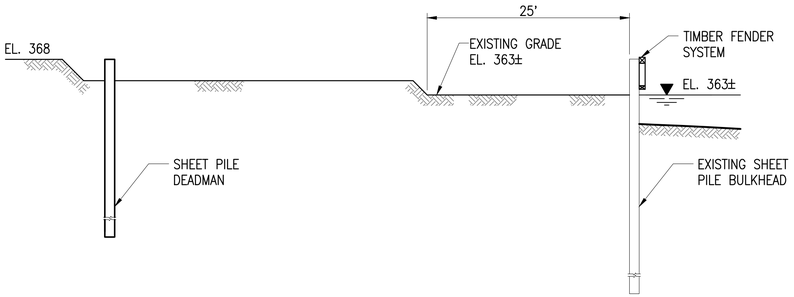

STAGE 1 - INSTALL SHEET PILE DEADMAN
AND INSTALL FENDER SYSTEM

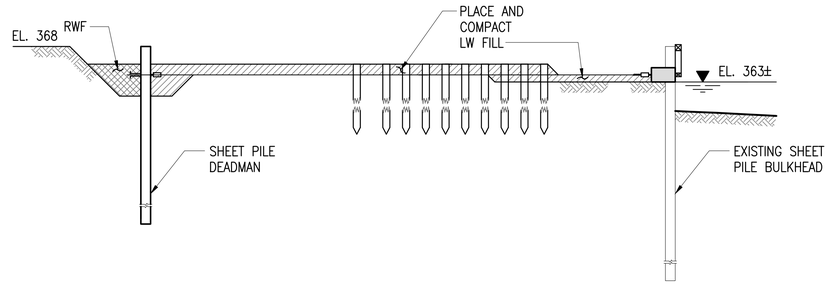

STAGE 4 - EARTH WORK - PLACE AND
COMPACT LW FILL AS REQUIRED

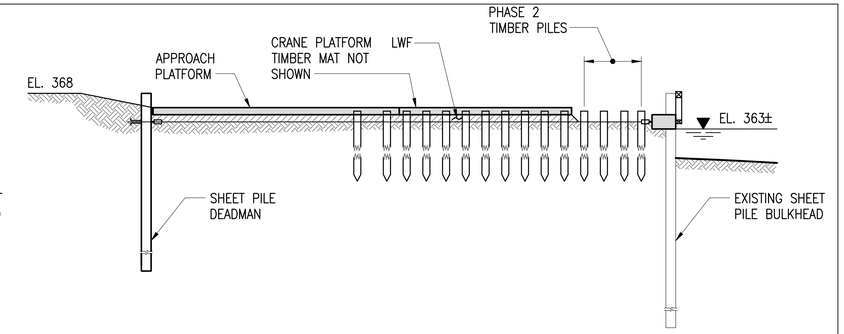

STAGE 6 - AFTER CONCRETE HAS GAINED DESIGN
STRENGTH INSTALL REMAINING TIMBER PILES
FROM CRANE PLATFORM SLAB DO NOT WALK
EQUIPMENT OVER ANCHORS

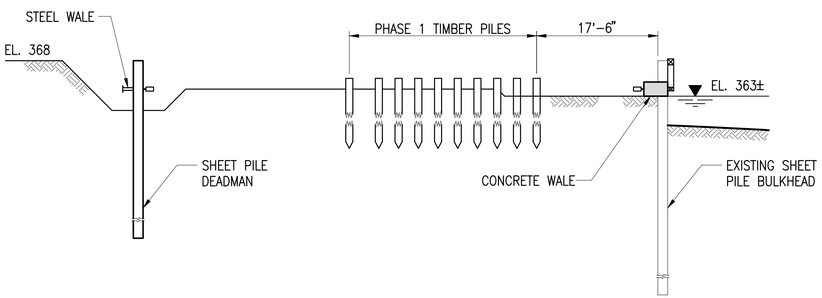

STAGE 2 - INSTALL PHASE 1 TIMBER PILES
DO NOT INSTALL ANY PILES WITHIN 17'-6" OF
EXISTING SHEET PILE BULKHEAD
INSTALL STEEL WALE, CONSTRUCT CONCRETE WALE

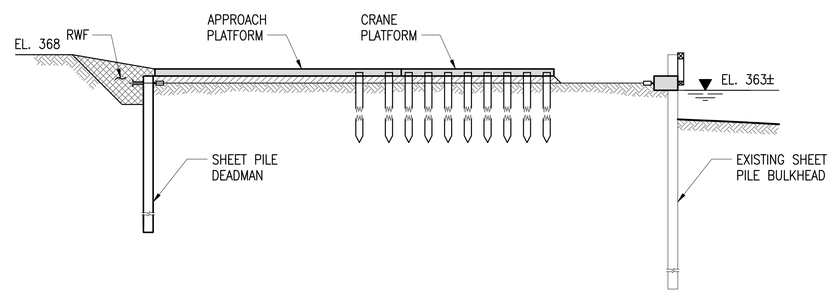

STAGE 5 - CONSTRUCT CRANE PLATFORM SLAB
UP TO CONSTRUCTION JOINT AS SHOWN
ON DRAWING SPA-007B

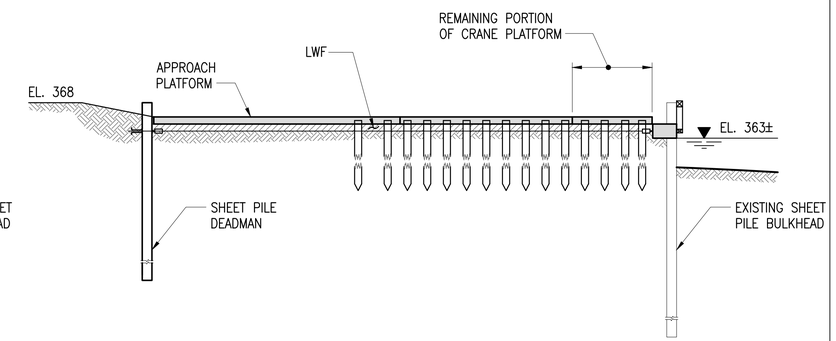

STAGE 7 - CONSTRUCT REMAINING
CRANE PLATFORM SLAB

NOTE: SEQUENCE SHOWN IS SUGGESTED. CONTRACTOR MAY REVISE SEQUENCE AS DEEMED NECESSARY, PROVIDED HE DOES NOT DRIVE PILES OR PLACE EQUIPMENT WITHIN 17'-6" OF EXISTING SHEET PILE WALL PRIOR TO INSTALLING AND PRESTRESSING ANCHORS (SEE STAGE 2) CONTRACTOR SHALL SUBMIT THE PROPOSED CONSTRUCTION SEQUENCE TO THE ENGINEER FOR REVIEW AND APPROVAL.

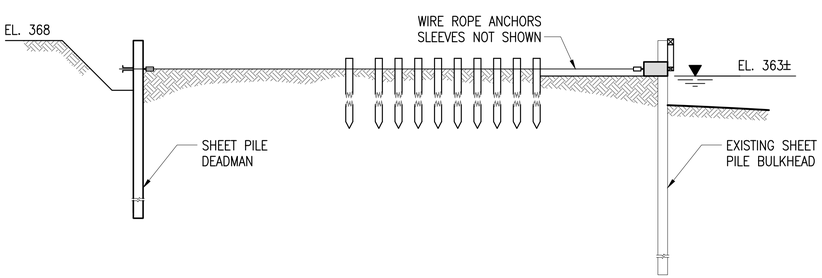

STAGE 3 - INSTALL WIRE ROPE AND PRESTRESS
ANCHORS AS PER TENSIONING SEQUENCE
SHOWN ON DRAWING SPA-005B

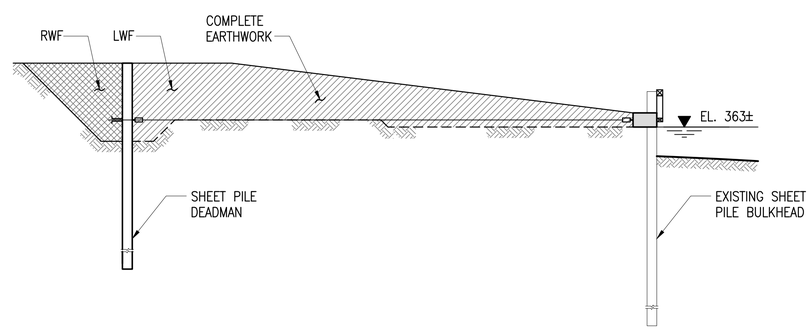

STAGE 5A - AT LOCATIONS AWAY FROM THE
CRANE PLATFORM, PERFORM EARTHWORK

DRAWING IS
HALF-SIZE IF
PLOTTED 11x17

HONEYWELL – RESTRICTED
PRINTS OF THIS DRAWING MAY NOT BE RELEASED WITHOUT PRIOR APPROVAL

STATE OF NEW YORK · PETER WEBSTER · No. 062785-1 · PROFESSIONAL ENGINEER

PARSONS
290 ELWOOD DAVIS ROAD, SUITE 312, LIVERPOOL, N.Y. 13088, PHONE: 315-451-9560

MUESER RUTLEDGE CONSULTING ENGINEERS
14 PENN PLAZA – 225 WEST 34th STREET
MRCE FILE NO. 9801

NOTICE

THIS DRAWING, THE PROPERTY OF HONEYWELL IS FURNISHED SUBJECT TO RETURN ON DEMAND AND THE CONDITION THAT THE INFORMATION AND TECHNOLOGY EMBODIED HEREIN SHALL NOT BE DISCLOSED OR USED AND THE DRAWING SHALL NOT BE REPRODUCED OR COPIED IN WHOLE OR IN PART EXCEPT AS PREVIOUSLY AUTHORIZED IN WRITING. ANY PERSON WHO MAY RECEIVE OR OBSERVE THIS DESIGN WILL BE HELD STRICTLY LIABLE FOR ANY VIOLATION WHETHER WILLFUL OR NEGLIGENT.

NO.	REVISION	BY	APPR.	APPR.	APPR.	APPR.	DATE	NO.	REVISION	BY	APPR.	APPR.	APPR.	APPR.	DATE

REFERENCE	DWG. NO.

APPROVALS	DATE
EQUIPMENT P.O. B/M NUMBERS:	

JOB NO.
CONTRACTOR'S JOB NO.
SCALE: N.T.S.

Honeywell
EMS ENGINEERING DEPARTMENT
101 COLUMBIA RD. BOX 2105
MORRISTOWN, NJ 07962

WILLIS AVE./SEMET TAR BEDS SITE IRM
SYRACUSE, NEW YORK

SHEET PILE ANCHORAGE CONSTRUCTION SEQUENCE

C.P.J.	8-09-11	S.Y.	8-09-11
DRAWN	DATE	CHK.	DATE
LOCATION	SPA-014B		REV

cperez
Aug 09, 2011 at 4:18pm
G:\DWGS\98\9801\NEW CONTRACT-OPT1\Contract-B\SPA-014B.dwg

NOTES:

1. ELEVATIONS SHOWN REFER TO USGS NAVD 88 DATUM.

2. BASE PLANS OBTAINED FROM TOPOGRAPHIC MAP PREPARED BY LOCKWOOD MAPPING COMPANY BASED ON AERIAL PHOTOGRAPHS TAKEN APRIL 14, 2000. ACTUAL CONFIGURATION OF CAUSEWAY, SURFACE FEATURES, ETC. AT THE TIME OF CONSTRUCTION MAY DIFFER FROM THAT SHOWN ON THE DRAWINGS.

3. BORING LOCATIONS AND LOGS ARE AVAILABLE FROM THE OWNER FOR REVIEW AND INTERPRETATION.

4. PROVIDE CONTAINMENT OF ALL MATERIAL DURING ALL REMOVAL AND DEMOLITION WORK. PREVENT ANY DEBRIS FROM ENTERING ONONDAGA LAKE.

5. CONTRACTOR IS FULLY RESPONSIBLE FOR ALL SITE SAFETY, INCLUDING BUT NOT LIMITED TO A SAFETY RAIL ALONG THE SHEET PILE WALL.

TECHNICAL REQUIREMENTS:

1. STEEL SHEET PILES FOR SHEET PILE DEADMAN SHALL BE ARBED AZ19-700, ASTM A572, GRADE 50 OR APPROVED EQUAL.

2. THE VERTICALITY IN EACH PLANE OF THE SHEET PILES, SHALL NOT DEVIATE FROM THE PLUMB BY MORE THAN ONE PERCENT. PLAN LOCATION SHALL BE WITHIN 6 INCHES OF THEORETICAL.

   a. DURING THE SHEET PILE SETTING AND DRIVING, SURVEY LOCATION AND MEASURE VERTICALITY TO CONFIRM TOLERANCES ARE BEING MET.

   b. IF A PILE IS OUT OF LOCATION BEYOND 6 INCHES BUT LESS THAN 9 INCHES, SUBSEQUENT SHEET LOCATIONS SHALL BE ADJUSTED TO BRING THE ALIGNMENT BACK INTO TOLERANCE.

   c. IF A PILE IS OUT OF LOCATION BY MORE THAN 9 INCHES, IT SHALL BE EXTRACTED, RELOCATED AND REINSTALLED.

3. HANDLE STEEL SHEET PILING USING HANDLING HOLES OR LIFTING DEVICES. HANDLE STEEL SHEET PILES WITH CARE TO PREVENT DAMAGE. SUPPORT ON LEVEL BLOCKS OR RACKS SPACED NOT MORE THAN 10 FEET APART AND NOT MORE THAN 2 FEET FROM THE ENDS. SUPPORTS BETWEEN MULTIPLE LIFTS SHALL BE IN A VERTICAL PLANE. PROTECT STEEL SHEET PILING TO PREVENT DAMAGE TO COATINGS AND TO PREVENT CORROSION PRIOR TO INSTALLATION.

4. PILE HAMMER: USE A PILE IMPACT OR VIBRATORY HAMMER HAVING A CAPACITY SUITABLE FOR THE TOTAL WEIGHT OF THE PILE AND THE CHARACTER OF SUBSURFACE MATERIAL TO BE ENCOUNTERED. OPERATE HAMMER AT THE RATE(S) RECOMMENDED BY THE MANUFACTURER THROUGHOUT THE ENTIRE DRIVING PERIOD. REPAIR DAMAGE TO PILING CAUSED BY USE OF A PILE HAMMER.

5. DRIVING FRAME: IT IS SUGGESTED THE CONTRACTOR PROVIDE A DRIVING FRAME SUITABLE FOR ALIGNING, SUPPORTING AND MAINTAINING SHEET PILING PLUMB IN THE CORRECT POSITION DURING SETTING AND DRIVING. USE A SYSTEM OF STRUCTURAL FRAMING SUFFICIENTLY RIGID TO RESIST LATERAL AND DRIVING FORCES AND TO ADEQUATELY SUPPORT THE SHEET PILING UNTIL DESIGN TIP ELEVATION IS ACHIEVED.

   a. DRIVING FRAMES SHALL NOT MOVE WHEN SUPPORTING SHEET PILING. FIT FRAMES WITH WOOD BLOCKING TO BEAR AGAINST SHEET PILES AND HOLD THE SHEET PILE AT THE DESIGN LOCATION ALIGNMENT. PROVIDE OUTER TEMPLATE STRAPS OR OTHER RESTRAINTS AS NECESSARY TO PREVENT THE SHEETS FROM WARPING OR WANDERING FROM THE ALIGNMENT, OR RACKING ALONG THE ALIGNMENT.

   b. SHEET PILES COMPLETED AND DRIVEN TO FINAL TIP ELEVATION MAY BE WELDED TO ADJACENT COMPLETED SHEETS IF REQUIRED TO RESTRAIN MOVEMENT OF COMPLETED SHEETS.

6. DRIVE SHEET PILES TO THE TIP ELEVATION(S) SHOWN ON THE CONTRACT DRAWINGS, OR DEEPER.

7. DO NOT DRIVE STEEL SHEET PILES UNTIL DEBRIS AND OTHER MATERIALS HAVE BEEN REMOVED THAT MAY INTERFERE WITH STEEL SHEET PILE DRIVING. IF NECESSARY, PERFORM PRE-TRENCH EXCAVATION OR SPUD ALONG ALIGNMENT TO REMOVE SHALLOW OBSTRUCTIONS, ABANDONED PILES, ETC. ABANDONED PILES OR UTILITIES THAT CANNOT BE REMOVED MAY NECESSITATE RELOCATION OF SHEET PILES AS DETERMINED BY THE ENGINEER.

8. SPUDDING FOR OBSTRUCTIONS: SPUDDING FOR INSTALLATION OF SHEET PILES MAY BE USED. SPUDDING SHALL BE PERFORMED AT NO ADDITIONAL COST TO THE OWNER. DISCONTINUE SPUDDING 5 FEET OR MORE ABOVE THE INDICATED TIP ELEVATIONS.

9. CUTTING AND SPLICING OF SHEET PILES DRIVEN BELOW THE REQUIRED TIP ELEVATION AND PILES DAMAGED BY DRIVING AND CUT OFF TO PERMIT FURTHER DRIVING SHALL BE EXTENDED AS REQUIRED TO REACH THE TOP ELEVATION BY SPLICING AS APPROVED BY THE ENGINEER.

   a. ENDS OF PILES TO BE SPLICED SHALL BE SQUARED BEFORE SPLICING ELIMINATE DIPS OR CAMBER. SPLICE PILES WITH CONCENTRIC ALIGNMENT OF THE INTERLOCKS SO THAT THERE ARE NO DISCONTINUITIES, DIPS OR CAMBER AT THE ABUTTING INTERLOCKS.

   b. SPLICED PILES SHALL BE FREE SLIDING AND ABLE TO OBTAIN THE MAXIMUM SWING WITH CONTIGUOUS PILES.

   c. SPLICES SHALL DEVELOP THE FULL STRUCTURAL STRENGTH OF THE MEMBER.

10. REMOVE AND REPLACE STEEL SHEET PILES FOUND TO BE OUT OF INTERLOCK, OUT OF TOLERANCE, DAMAGED OR OTHERWISE DEFICIENT AT NO ADDITIONAL COST TO THE OWNER.

11. PERFORM CONTINUOUS INSPECTION DURING SHEET PILE INSTALLATION. INSPECT ALL STEEL SHEET PILES FOR COMPLIANCE WITH TOLERANCE REQUIREMENTS. BRING ANY UNUSUAL PROBLEMS THAT MAY OCCUR TO THE ATTENTION OF THE ENGINEER.

12. MAINTAIN A PILE DRIVING RECORD FOR EACH SHEET PILE. INDICATE ON THE INSTALLATION RECORD INSTALLATION DATES AND TIMES, TYPE AND SIZE OF HAMMER, RATE OF OPERATION, TOTAL DRIVING TIME, DIMENSIONS OF DRIVING HELMET AND CAP USED, BLOWS REQUIRED PER FOOT FOR EACH FOOT OF PENETRATION, PILE LOCATIONS, PILE PLUMBNESS, TIP ELEVATIONS,GROUND ELEVATIONS, CUT-OFF ELEVATIONS, AND ANY REHEADING OR CUTTING OF SHEET PILES.

    RECORD ANY UNUSUAL SHEET PILE DRIVING PROBLEMS DURING DRIVING.

13. SUBMIT FOR REVIEW AND APPROVAL:

    a. PROPOSED SEQUENCE OF INSTALLATION.

    b. COMPLETE DESCRIPTION OF ALL INSTALLATION EQUIPMENT AND APPURTENANCES AND THEIR PROPOSED LOCATIONS.

    c. PILE DRIVING RECORDS.

    d. A SURVEYED RECORD DRAWING OF THE SHEET PILE ALIGNMENT INCLUDING COORDINATES OF TURNING POINTS, TIP ELEVATIONS AND DEVIATIONS FROM THEORETICAL LOCATIONS, ORIENTATIONS OR DIMENSIONS.

14. ALL CONCRETE SHALL BE 4000 PSI MINIMUM 28 DAY STRENGTH FOR CONCRETE WALES AND SHALL BE 6000 PSI MINIMUM 28 DAY STRENGTH FOR CRANE PLATFORM AND APPROACH SLABS, PORTLAND CEMENT TYPE II AIR ENTRAINED. CONCRETE WORK SHALL CONFORM TO ACI 306 - COLD WEATHER CONCRETING.

15. ALL REINFORCING STEEL SHALL CONFORM TO ASTM A615, GRADE 60.

16. ALL STRUCTURAL STEEL SHAPES SHALL CONFORM TO ASTM A572, GRADE 50. STRUCTURAL PLATES AND MISCELLANEOUS STEEL SHALL CONFORM TO ASTM A36.

17. ALL BOLTS SHALL CONFORM TO ASTM A325. TIERODS SHALL CONFORM TO ASTM A615, GRADE 75. ALL TIEROD CONNECTIONS AND HARDWARE SHALL BE CAPABLE OF DEVELOPING 100% OF THE ULTIMATE STRENGTH OF THE TIEROD.

18. WIRE ROPE:
    a. ALL WIRE ROPE SHALL CONFORM TO ASTM A1023-09.

    b. ALL WIRE ROPE SHALL BE GALVANIZED.

    c. ALL WIRE ROPE SHALL BE OF THE SIZE AND TYPE AS SHOWN ON THE ANCHOR TABLE ON DRAWING SPA-010B.

    d. ALL WIRE ROPE SHALL BE EXTRA IMPROVED PLOW STEEL IWRC.

    e. WIRE ROPE SHALL BE PRE-STRETCHED.

19. SLEEVES FOR WIRE ROPES SHALL BE HIGH DENSITY POLYETHYLENE (HDPE) CONFORMING TO ASTM F2648 AND OF SIZE SHOWN ON DRAWINGS. SEE MATERIALS LIST ON DRAWING SPA-016B.

20. WELDING: SHOP AND FIELD WELDING FOR SPLICING, SEAL WELDS AND OTHER CONDITIONS, QUALIFICATION OF WELDING PROCEDURES, WELDERS, AND WELDING OPERATORS SHALL BE IN ACCORDANCE WITH AWS D1.1.

21. TIMBER FOR BLOCKING, SHIMS AND WEDGES SHALL BE MIXED HARDWOODS.

22. THE STEEL SHEET ANCHOR PILES, STEEL WALES AND CONNECTIONS SHALL BE COAL TAR EPOXY COATED AS FOLLOWS:

    a. COAT STEEL WITH TWO COATS, 8 MILS DRY FILM THICKNESS (DFT) EACH.

    b. COAL TAR EPOXY COATING SHALL BE "BITUMASTIC NO. 300-M" AS MANUFACTURED BY CARBOLINE OR APPROVED EQUAL.

    c. ALL SURFACES TO BE COATED SHALL BE SAND-BLASTED IN PREPARATION FOR APPLICATION OF THE COATING. SAND-BLASTING SHALL BE TO NEAR WHITE METAL, AT LEAST EQUIVALENT TO A COMMERCIAL BLAST AS DEFINED BY SSPC-SP-10. ALL SURFACES TO BE COATED MUST BE COMPLETELY DRY, FREE OF MOISTURE, SOIL, DUST AND GRIT AT THE TIME THE COATING IS APPLIED.

    d. APPLICATION OF THE COATINGS AND CURING REQUIREMENTS SHALL BE IN CONFORMANCE WITH THE MANUFACTURER'S REQUIREMENTS.

    e. WHERE WELDING, FASTENINGS OR OTHER WORK ARE TO BE ACCOMPLISHED AFTER INSTALLATION OF PILES, FIELD APPLIED PROTECTIVE COATS SHALL BE MADE AFTER SAME IS COMPLETED.

    f. THE CONTRACTOR SHALL APPOINT AND PAY FOR AN INDEPENDENT TESTING AGENCY, APPROVED BY THE ENGINEER, TO INSPECT AND CERTIFY THE COATING PROCEDURE AS FOLLOWS:

       - CERTIFY THAT THE STEEL HAS BEEN PREPARED FOR COATING IN ACCORDANCE WITH THE COATING MANUFACTURER'S RECOMMENDATIONS AND ADDITIONAL REQUIREMENTS NOTED HEREIN.

       - CERTIFY THE THICKNESSES OF THE TWO EPOXY COATS AND THAT COAT IS APPLIED IN ACCORDANCE WITH THE MANUFACTURER'S RECOMMENDATIONS AND TO THE DRY FILM THICKNESSES SPECIFIED.

    g. STEEL SHEET PILES FOR THE SHEET PILE DEADMAN SHALL BE COATED FULL LENGTH, BOTH SIDES.

23. CENTER HOLE JACKS FOR PRESTRESSING ANCHORS SHALL BE HYDRAULIC PISTON JACKS OF ADEQUATE CAPACITY TO PRESTRESS ANCHORS TO THE LOADS SHOWN. JACKS SHALL BE CONNECTED TO A COMMON MANIFOLD TO ALLOW PRESTRESSING OF MULTIPLE ANCHORS. PROVIDE CALIBRATED GAUGES TO ACCURATELY MONITOR PRESSURES AND LOADS.

24. ALL HOLES THOUGH EXISTING SHEET PILE BULKHEAD REQUIRED FOR INSTALLATION OF BOLTS AT CONCRETE WALE SHALL BE DRILLED. BURNING HOLES THROUGH SHEET PILE IS NOT PERMITTED.

25. AFTER INSTALLATION OF BOLTS AND PRIOR TO PLACEMENT OF CONCRETE THE EXISTING SHEET PILE COATING SHALL BE REPAIRED, AS PER COATING MANUFACTURER'S RECOMMENDATIONS.

DRAWING IS HALF-SIZE IF PLOTTED 11x17

HONEYWELL - RESTRICTED
PRINTS OF THIS DRAWING MAY NOT BE RELEASED WITHOUT PRIOR APPROVAL

STATE OF NEW YORK · PETER WEBSTER REED · No. 062785-1 · LICENSED PROFESSIONAL ENGINEER

PARSONS
290 ELWOOD DAVIS ROAD, SUITE 312, LIVERPOOL, N.Y. 13088, PHONE: 315-451-9560

MUESER RUTLEDGE CONSULTING ENGINEERS
14 PENN PLAZA - 225 WEST 34th STREET
MRCE FILE NO. 9801

NOTICE

THIS DRAWING, THE PROPERTY OF HONEYWELL IS FURNISHED SUBJECT TO RETURN ON DEMAND AND THE CONDITION THAT THE INFORMATION AND TECHNOLOGY EMBODIED HEREIN SHALL NOT BE DISCLOSED OR USED AND THE DRAWING SHALL NOT BE REPRODUCED OR COPIED IN WHOLE OR IN PART EXCEPT AS PREVIOUSLY AUTHORIZED IN WRITING. ANY PERSON WHO MAY RECEIVE OR OBSERVE THIS DESIGN WILL BE HELD STRICTLY LIABLE FOR ANY VIOLATION WHETHER WILLFUL OR NEGLIGENT.

NO.	REVISION	BY	APPR.	APPR.	APPR.	APPR.	DATE	NO.	REVISION	BY	APPR.	APPR.	APPR.	APPR.	DATE

REFERENCE	DWG. NO.	APPROVALS	DATE
		EQUIPMENT P.O. B/M NUMBERS:	

JOB NO. _____
CONTRACTOR'S JOB NO. _____
SCALE: NONE

WILLIS AVE./SEMET TAR BEDS SITE IRM
SYRACUSE, NEW YORK

SHEET PILE ANCHORAGE
GENERAL NOTES AND REQUIREMENTS 1

Honeywell
EMS ENGINEERING DEPARTMENT
101 COLUMBIA RD. BOX 2105
MORRISTOWN, NJ 07962

A.M.	8-09-11	S.Y.	8-09-11
DRAWN	DATE	CHK.	DATE
LOCATION	SPA-015B		REV

cperez
Aug 09, 2011 at 3:38pm
G:\DWGS\98\9801\NEW CONTRACT-OPT1\Contract-B\SPA-015B.dwg

TIMBER PILES, TIMBER FENDER SYSTEM AND CRANE PLATFORM NOTES:

1. TIMBER PILES SHALL BE DOUGLAS FIR, CONFORMING TO ASTM D 25. MINIMUM BUTT DIAMETER SHALL BE 12 INCHES AND TIP DIAMETER OF 7 INCHES PRESSURE TREAT TIMBER PILES IN ACCORDANCE WITH AMERICAN WOOD PROTECTION ASSOCIATION (AWPA) C3 USING CHROMATED COPPER ARSENATE (CCA) TO A RETENTION OF 2.5 PCF.

2. DRIVE ALL TIMBER PILES TO THE TIP ELEVATION SHOWN ON DRAWING SPA-008B +/- 6 INCHES.

3. THE VERTICALITY OF EACH TIMBER PILE, SHALL NOT DEVIATE FROM THE PLUMB BY MORE THAN ONE PERCENT. PLAN LOCATION SHALL BE WITHIN 6 INCHES OF THEORETICAL. IF A PILE IS OUT OF LOCATION BY MORE THAN 6 INCHES, IT SHALL BE EXTRACTED, RELOCATED AND REINSTALLED.

4. DURING TIMBER PILE SETTING AND DRIVING, SURVEY LOCATIONS AND MEASURE VERTICALITY OF THE TIMBER PILES TO CONFIRM TOLERANCES ARE BEING MET.

5. PILE HAMMER: USE A PILE IMPACT OR VIBRATORY HAMMER HAVING A CAPACITY SUITABLE FOR THE TOTAL WEIGHT OF THE PILE AND THE CHARACTER OF SUBSURFACE MATERIAL TO BE ENCOUNTERED. OPERATE HAMMER AT THE RATE(S) RECOMMENDED BY THE MANUFACTURER THROUGHOUT THE ENTIRE DRIVING PERIOD. REPAIR DAMAGE TO PILING CAUSED BY USE OF A PILE HAMMER.

6. REMOVE AND REPLACE TIMBER PILES FOUND TO BE OUT OF OUT OF TOLERANCE, DAMAGED OR OTHERWISE DEFICIENT AT NO ADDITIONAL COST TO THE OWNER.

7. PERFORM CONTINUOUS INSPECTION DURING TIMBER PILE DRIVING. INSPECT ALL TIMBER PILES FOR COMPLIANCE WITH TOLERANCE REQUIREMENTS. BRING ANY UNUSUAL PROBLEMS THAT MAY OCCUR TO THE ATTENTION OF THE ENGINEER.

8. MAINTAIN A PILE DRIVING RECORD FOR EACH TIMBER PILE. INDICATE ON THE INSTALLATION RECORD INSTALLATION DATES AND TIMES, TYPE AND SIZE OF HAMMER, RATE OF OPERATION, TOTAL DRIVING TIME, DIMENSIONS OF DRIVING HELMET AND CAP USED, BLOWS REQUIRED PER FOOT FOR EACH FOOT OF PENETRATION, PILE LOCATIONS, PILE PLUMBNESS, TIP ELEVATIONS,GROUND ELEVATIONS, CUT-OFF ELEVATIONS, AND ANY REHEADING OR CUTTING OF TIMBER PILES.

9. RECORD ANY UNUSUAL PILE DRIVING PROBLEMS ENCOUNTERED DURING DRIVING.

10. CONTRACTOR TO PERFORM PDA TESTS ON THE FIRST THREE DRIVEN TIMBER PILES TO VERIFY AN ULTIMATE LOAD CARRYING CAPACITY OF 18 TONS.

11. SUBMIT FOR REVIEW AND APPROVAL:
    a. PROPOSED SEQUENCE OF INSTALLATION.
    b. COMPLETE DESCRIPTION OF ALL INSTALLATION EQUIPMENT AND APPURTENANCES AND THEIR PROPOSED LOCATIONS.
    c. PILE DRIVING RECORDS.
    d. PDA RECORDS

12. TIMBER FENDERS SHALL BE SOUTHERN YELLOW PINE OR DOUGLAS FIR WITH A MINIMUM ALLOWABLE BENDING STRESS (Fb) OF 1200 PSI AND A MINIMUM ALLOWABLE HORIZONTAL SHEAR STRESS (Fv) OF 140 PSI. PRESSURE TREAT IN ACCORDANCE WITH AWPA C3 USING CCA TO A RETENTION OF 1.5 PCF.

13. TIMBER SIZES SHOWN ARE NOMINAL SIZES.

14. ALL TIMBER SHALL BE CUT SQUARELY, SMOOTHLY AND ACCURATELY. HOLES FOR BOLTS SHALL BE BORED AND SHALL PROVIDE AN EASY DRIVING FIT. TIMBER CUT OR BORED AFTER PRESERVATIVE TREATMENT SHALL BE PROTECTED IN ACCORDANCE WITH AWPA M4. HOLES AT EXPOSED BOLTS SHALL BE COUNTERSUNK.

15. TIMBER SHALL BE HANDLED CAREFULLY WITHOUT SUDDEN DROPPING, BREAKING OF OUTER FIBERS, BRUISING OR PENETRATING THE SURFACE WITH TOOLS. ROPE SLINGS SHALL BE USED WHEN MOVING THE MATERIAL.

16. ALL BOLTS SHALL CONFORM TO ASTM A 307 UNLESS OTHERWISE NOTED. NUTS SHALL CONFORM TO ASTM A 307, GRADE A, HEX. WASHERS BEARING ON TIMBER SHALL BE HEAVY ROUND PLATE 3-1/4" DIAMETER BY ¼" THICK.

17. ALL HARDWARE SHALL BE NEW, UNUSED AND HOT DIPPED GALVANIZED IN ACCORDANCE WITH ASTM A 153.

18. THE CRANE PLATFORM HAS BEEN DESIGNED TO SUPPORT A MANITOWAC 4100 W WITH A TOTAL DEAD WEIGHT OF 357 KIPS AND PICK LOAD OF 20 KIPS AT A MAXIMUM REACH OF 100 FEET.

19. TIMBER MAT SHALL BE A MINIMUM THICKNESS OF 12 INCHES AND SHALL BE OF ADEQUATE QUALITY AND CONDITION TO PROTECT THE CONCRETE PLATFORM AND TO DISTRIBUTE THE CRANE LOAD. TIMBER MAT MEMBERS SHALL BE BOLTED TOGETHER AS NEEDED TO KEEP THEM FROM SHIFTING. TIMBER MATS SHALL BE PLACED BOTH ON THE APPROACH SLAB AND CRANE PLATFORM. NO EQUIPMENT SHALL BE OPERATED DIRECTLY ON THE CONCRETE SLAB.

20. MAINTAIN A MINMUM 20' CLEAR DISTANCE BETWEEN CRANES.

SOIL COMPACTION REQUIREMENTS:

1. COMPACT DGA WALKWAY ALONG SHEETING WITH A MINIMUM OF THREE PASSES OF A PLATE TAMPER DESIGNED FOR SOIL COMPACTION.

2. COMPACT REGULAR WEIGHT FILL OUTSIDE ROADWAY TO MINIMUM 85% STANDARD PROCTOR MAXIMUM DRY DENSITY MDD (ASTM D698).

3. COMPACT REGULAR WEIGHT FILL BELOW ROADWAY AND ROADWAY DGA TO MINIMUM 92% MDD (ASTM D698), IN MAXIMUM 12 INCH LOOSE LIFTS.

4. COMPACT ROADWAY DGA TO MINIMUM 95% STANDARD PROCTOR MDD IN TWO EQUAL LIFTS.

5. TAMP TOPSOIL UNTIL ABLE TO CARRY FOOT TRAFFIC. NO COMPACTION OF LWF, EXCEPT 2 PASSES OF PLATE TAMPER OF LWF AT SPRING LINE OF HDPE SLEEVES.

GEOSYNTHETIC NOTES:

1. ALL OVERLAPS FOR SEPARATION AND STABILIZATION GEOTEXTILES WILL BE MINIMUM 18 INCHES.

EARTHWORK NOTES:

1. OPERATE ONLY LOW PRESSURE EQUIPMENT DIRECTLY ON LWF TO AVOID CRUSHING OR COMPACTING LWF.

2. PREVENT FINES FROM ENTERING LWF. INSTALL SEPARATION FABRICS OVER LWF AS SOON AS PRACTICAL. PREVENT STORM WATER RUNOFF FROM CARRYING SILT INTO LWF.

3. MAINTAIN CONSTRUCTION EQUIPMENT AS FAR FROM BULKHEAD SHEETING AS IS PRACTICAL.

4. FOLLOW ALL SEDIMENT AND EROSION CONTROL REQUIREMENTS.

5. LANDSCAPING REQUIREMENTS INBOARD OF MEMBRANE NOT SHOWN ON THESE DRAWINGS.

ANCHOR TENSIONING AND MONITORING NOTES:

1. ANCHOR TENSIONING SHALL BE PERFORMED IN ACCORDANCE WITH THE TENSIONING SEQUENCE SHOWN ON DRAWING SPA-005B.

2. TENSION ALL ANCHORS WITHIN EACH WALE SIMULTANEOUSLY. EACH TENSIONING OPERATION SHALL INVOLVE TENSIONING ANCHORS IN SETS OF THREE ADJACENT WALES AS INDICATED IN STEP 5 BELOW.

3. CONTRACTOR SHALL PROVIDE LASER LEVELS CAPABLE OF PRODUCING A REFERENCE LINE FOR MEASURING ABSOLUTE MOVEMENT OF BOTH THE BULKHEAD AND ANCHORAGE SHEETING AT EACH ANCHOR POINT DURING ANCHOR TENSIONING AT THE INITIAL ALIGNMENT LOAD, THE TWO LOAD INCREMENTS SPECIFIED AND THE FOLLOWING LOCK OFF LOAD. DEPENDING ON MOVEMENTS RECORDED, ENGINEER TO INSTRUCT THE CONTRACTOR TO EITHER PROCEED WITH THE TENSIONING OPERATION OR MODIFY THE PROCEDURE TO REDUCE BULKHEAD OR DEADMAN SHEETING MOVEMENT OR DIFFERENTIAL MOVEMENT WITHIN A SINGLE WALE.

4. CONTRACTOR TO PERFORM OPTICAL MONITORING OF THE RELOCATED DMP'S ON THE SHEET PILE BULKHEAD DURING TENSIONING AND SUBIMT THE DATA TO THE ENGINEER.

5. PERFORM TENSIONING AS FOLLOWS:
    a. TENSION ALL ANCHORS WITHIN THE FIRST WALE AT THE SAME RATE OF LOAD INCREASE, ALLOWING CHECKING OF DEFLECTION AT THE ALIGNMENT LOAD, 35%, 70% AND 100% OF THE LOCK OFF LOAD.
    b. LOCK OFF ANCHORS WITHIN THE FIRST WALE AT THE LOADS INDICATED IN THE ANCHOR TABLE PROVIDED ON DRAWING SPA-010B.
    c. TENSION ALL ANCHORS WITHIN THE ADJACENT SECOND WALE FOLLOWING SAME LOADING / MONITORING PROCEDURE AS FOR THE FIRST WALE.
    d. LOCK OFF THE ANCHORS WITHIN THE SECOND WALE AT THE LOADS INDICATED IN THE ANCHOR TABLE PROVIDED ON DRAWING SPA-010B.
    e. TENSION ALL ANCHORS WITHIN THE THIRD ADJACENT WALE FOLLOWING SAME LOADING / MONITORING PROCEDURE AS FOR THE FIRST AND SECOND WALES.
    f. LOCK OFF THE ANCHORS WITHIN THE THIRD ADJACENT WALE AT THE LOADS INDICATED IN THE ANCHOR TABLE PROVIDED ON DRAWING SPA-010B.
    g. PERFORM LIFT-OFF TESTS ON THE ANCHORS WITHIN THE FIRST WALE. IF THE TEST INDICATES THAT THE LOAD AT ANY OF THE ANCHORS AT THE FIRST WALE IS REDUCED BY MORE THAN 10% OF THE LOCK OFF LOAD, RE-TENSION THE ANCHOR TO THE LOCK OFF LOAD.
    h. REPEAT STEPS ABOVE SEQUENTIALLY SUCH THAT LIFT OFF TESTS ARE PERFORMED AT ALL ANCHORS, EXCEPT FOR THE LAST WALE.

LONG TERM STRAIN MONITORING OF ANCHORS:

1. CONTRACTOR TO PROVIDE ACCESS TO ENGINEER FOR INSTALLATION OF STRAIN MONITORS AND RELATED INSTRUMENTATION AT SELECT ANCHORS.

MATERIALS LIST		
MATERIAL		DESCRIPTION
1	SEPARATION GEOTEXTILE	NON-WOVEN POLYPROPYLENE GEOTEXTILE, MIN. 7 OZ/ SY
2	DENSE GRADED AGGREGATE (DGA) FILL	DGA SHALL CONSIST OF CRUSHED ROCK PRODUCT FROM HARD DURABLE STONE. SEE GRADATION REQUIREMENTS BELOW
3	STABILIZATION FABRIC	US 4800 WOVEN GEOTEXTILE AS MANUFACTURED BY US FABRICS CINNCINATTI, OH.
4	REGULAR WEIGHT FILL BELOW ROADWAY (RWF1)	WELL-GRADED SAND, LESS THAN 8% FINES (GRADATION IS TO BE APPROVED)
5	HDPE SLEEVE FOR ANCHORS	HDPE SLEEVE SHALL BE SINGLE WALL HIGHWAY PIPE AS MANUFACTURED BY ADS OF COLUMBUS OHIO OR APPROVED EQUAL

DENSE GRADED AGGREGATE (DGA):	
SEIVE DESIGNATION	PERCENTAGE BY MASS PASSING SQUARE MESH SIEVES
50 MM	100
37.5 MM	70 – 100
19.0 MM	50 – 85
4.75 MM	30 – 55
300 μM	8 – 24
75 μM	3 – 10

DRAWING IS HALF-SIZE IF PLOTTED 11x17

HONEYWELL – RESTRICTED
PRINTS OF THIS DRAWING MAY NOT BE RELEASED WITHOUT PRIOR APPROVAL

PARSONS
290 ELWOOD DAVIS ROAD, SUITE 312, LIVERPOOL, N.Y. 13088, PHONE: 315-451-9560

MUESER RUTLEDGE CONSULTING ENGINEERS
14 PENN PLAZA – 225 WEST 34th STREET
MRCE FILE NO. 9801

NOTICE

THIS DRAWING, THE PROPERTY OF HONEYWELL IS FURNISHED SUBJECT TO RETURN ON DEMAND AND THE CONDITION THAT THE INFORMATION AND TECHNOLOGY EMBODIED HEREIN SHALL NOT BE DISCLOSED OR USED AND THE DRAWING SHALL NOT BE REPRODUCED OR COPIED IN WHOLE OR IN PART EXCEPT AS PREVIOUSLY AUTHORIZED IN WRITING. ANY PERSON WHO MAY RECEIVE OR OBSERVE THIS DESIGN WILL BE HELD STRICTLY LIABLE FOR ANY VIOLATION WHETHER WILLFUL OR NEGLIGENT.

NO.	REVISION	BY	APPR.	APPR.	APPR.	APPR.	DATE	NO.	REVISION	BY	APPR.	APPR.	APPR.	APPR.	DATE	REFERENCE	DWG. NO.	APPROVALS	DATE

EQUIPMENT P.O. B/M NUMBERS:

JOB NO.

CONTRACTOR'S JOB NO.

SCALE: NONE

WILLIS AVE./SEMET TAR BEDS SITE IRM
SYRACUSE, NEW YORK

SHEET PILE ANCHORAGE
GENERAL NOTES AND REQUIREMENTS 2

A.M.	8-09-11	S.Y.	8-09-11
DRAWN	DATE	CHK.	DATE

Honeywell
EMS ENGINEERING DEPARTMENT
101 COLUMBIA RD. BOX 2105
MORRISTOWN, NJ 07962

LOCATION

SPA-016B

REV

cperez
Aug 09, 2011 at 3:45pm
G:\DWGS\98\9801\NEW CONTRACT-OPT1\Contract-B\SPA-016B.dwg