WILLIS AVE./SEMET TAR BEDS SITE IRM
INTERIM SHORELINE RESTORATION
CONTRACT A

DRAWING NO.	TITLE
SPA-001A	COVER SHEET
SPA-002A	INTERIM SHORELINE RESTORATION GENERAL PLAN
SPA-003A	INTERIM SHORELINE RESTORATION EXISTING SURFACE CONDITIONS PLAN
SPA-004A	INTERIM SHORELINE RESTORATION DETAIL PLAN 1
SPA-005A	INTERIM SHORELINE RESTORATION DETAIL PLAN 2
SPA-006A	INTERIM SHORELINE RESTORATION SECTIONS AND DETAILS 1
SPA-007A	INTERIM SHORELINE RESTORATION SECTIONS AND DETAILS 2
SPA-008A	INTERIM SHORELINE RESTORATION EXISTING INSTRUMENTATION PLAN AND NOTES
SPA-009A	INTERIM SHORELINE RESTORATION GENERAL NOTES AND REQUIREMENTS

ABBREVIATIONS:

C – SUGGESTED CONSTRUCTION JOINT LOCATION
E – SUGGESTED EXPANSION JOINT LOCATION
TYP. – TYPICAL
U.O.N. – UNLESS OTHERWISE NOTED
V.I.F. – VERIFY IN FIELD
W.P. – WORKING POINT
GCL – GEOSYNTHETIC CLAY LINER
LWF – LIGHT WEIGHT FILL
RWF – REGULAR WEIGHT FILL
WWF – WELDED WIRE FABRIC
DGA – DENSE GRADED AGGREGATE
TBD – TO BE DETERMINED

DRAWING IS HALF-SIZE IF PLOTTED 11x17

HONEYWELL – RESTRICTED
PRINTS OF THIS DRAWING MAY NOT BE RELEASED WITHOUT PRIOR APPROVAL

STATE OF NEW YORK · PETER WEBSTER DEBRIND · No. 062785-1 · LICENSED PROFESSIONAL ENGINEER

PARSONS
290 ELWOOD DAVIS ROAD, SUITE 312, LIVERPOOL, N.Y. 13088, PHONE: 315-451-9560

MUESER RUTLEDGE CONSULTING ENGINEERS
14 PENN PLAZA – 225 WEST 34th STREET
MRCE FILE NO. 9801

NOTICE
THIS DRAWING, THE PROPERTY OF HONEYWELL IS FURNISHED SUBJECT TO RETURN ON DEMAND AND THE CONDITION THAT THE INFORMATION AND TECHNOLOGY EMBODIED HEREIN SHALL NOT BE DISCLOSED OR USED AND THE DRAWING SHALL NOT BE REPRODUCED OR COPIED IN WHOLE OR IN PART EXCEPT AS PREVIOUSLY AUTHORIZED IN WRITING. ANY PERSON WHO MAY RECEIVE OR OBSERVE THIS DESIGN WILL BE HELD STRICTLY LIABLE FOR ANY VIOLATION WHETHER WILLFUL OR NEGLIGENT.

NO.	REVISION	BY	APPR.	APPR.	APPR.	APPR.	DATE	NO.	REVISION	BY	APPR.	APPR.	APPR.	APPR.	DATE	REFERENCE	DWG. NO.	APPROVALS	DATE
–	–	–	–				–												

EQUIPMENT P.O. B/M NUMBERS:

JOB NO.
CONTRACTOR'S JOB NO.
SCALE: NTS

WILLIS AVE./SEMET TAR BEDS SITE IRM
SYRACUSE, NEW YORK
COVER SHEET

Honeywell
EMS ENGINEERING DEPARTMENT
101 COLUMBIA RD., BOX 2105
MORRISTOWN, NJ 07962

A.M.	06-24-11	S.Y.	06-24-11
DRAWN	DATE	CHK.	DATE
LOCATION	SPA-001A		REV

cperez
Jun 24, 2011 at 4:54pm
G:\DWGS\98\9801\NEW CONTRACT-OPT1\Contract-A\SPA-001A.DWG

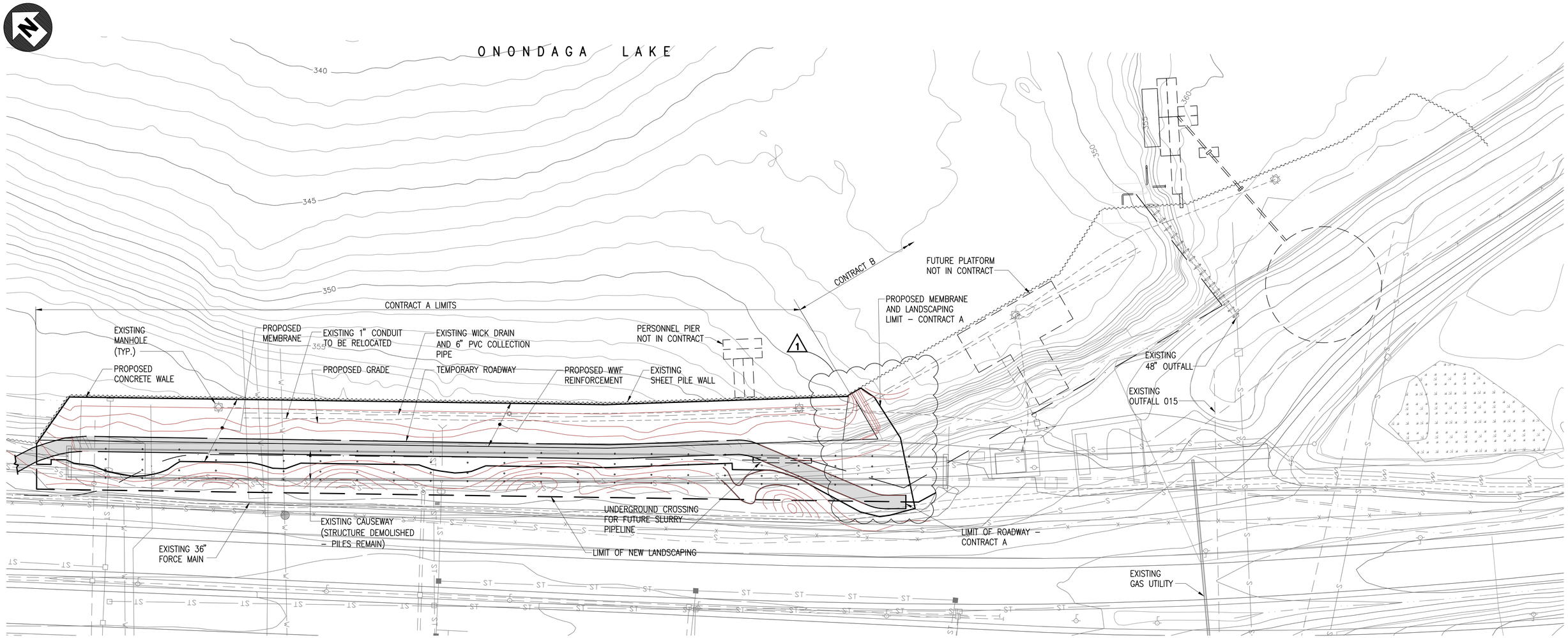

PLAN

50 25 0 50 100

SCALE: 1"=50'

DRAWING IS HALF-SIZE IF PLOTTED 11x17

HONEYWELL – RESTRICTED
PRINTS OF THIS DRAWING MAY NOT BE RELEASED WITHOUT PRIOR APPROVAL

STATE OF NEW YORK · PETER WEBSTER DEBNO · No. 062785-1 · LICENSED PROFESSIONAL ENGINEER

PARSONS
290 ELWOOD DAVIS ROAD, SUITE 312, LIVERPOOL, N.Y. 13088, PHONE: 315-451-9560

MUESER RUTLEDGE CONSULTING ENGINEERS
14 PENN PLAZA – 225 WEST 34th STREET
MRCE FILE NO. 9801

NOTICE

THIS DRAWING, THE PROPERTY OF HONEYWELL IS FURNISHED SUBJECT TO RETURN ON DEMAND AND THE CONDITION THAT THE INFORMATION AND TECHNOLOGY EMBODIED HEREIN SHALL NOT BE DISCLOSED OR USED AND THE DRAWING SHALL NOT BE REPRODUCED OR COPIED IN WHOLE OR IN PART EXCEPT AS PREVIOUSLY AUTHORIZED IN WRITING. ANY PERSON WHO MAY RECEIVE OR OBSERVE THIS DESIGN WILL BE HELD STRICTLY LIABLE FOR ANY VIOLATION WHETHER WILLFUL OR NEGLIGENT.

NO.	REVISION	BY	APPR.	APPR.	APPR.	APPR.	DATE
1	REVISED CONTOURS AND TEMPORARY ROADWAY	S.Y.	–				08-09-11

NO.	REVISION	BY	APPR.	APPR.	APPR.	APPR.	DATE

REFERENCE	DWG. NO.	APPROVALS	DATE

EQUIPMENT P.O. B/M NUMBERS:

JOB NO.
CONTRACTOR'S JOB NO.
SCALE: 1"=50'-0"

WILLIS AVE./SEMET TAR BEDS SITE IRM
SYRACUSE, NEW YORK

INTERIM SHORELINE RESTORATION
GENERAL PLAN

Honeywell
EMS ENGINEERING DEPARTMENT
101 COLUMBIA RD. BOX 2105
MORRISTOWN, NJ 07962

A.M.	06-24-11	S.Y.	06-24-11
DRAWN	DATE	CHK.	DATE

LOCATION: SPA-002A
REV: 1

cpeterez
Aug 09, 2011 at 3:05pm
G:\DWGS\98\9801\NEW CONTRACT-OPT1\Contract-A\SPA-002A.dwg

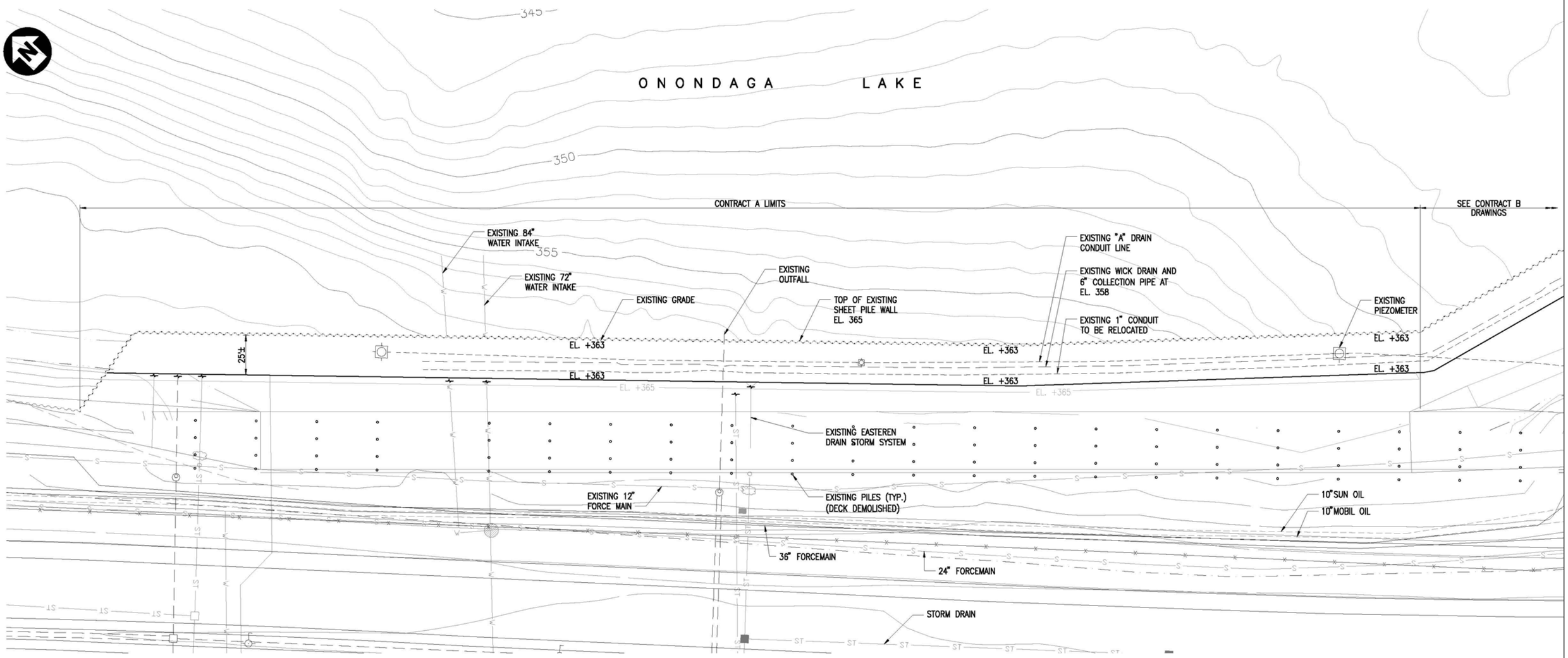

PLAN

30' 20' 10' 0 30' 60'

SCALE: 1"=30'

NOTES:

1. FOR EXISTING INSTRUMENTATION SEE DRAWING SPA-008A.

DRAWING IS HALF-SIZE IF PLOTTED 11x17

HONEYWELL – RESTRICTED
PRINTS OF THIS DRAWING MAY NOT BE RELEASED WITHOUT PRIOR APPROVAL

STATE OF NEW YORK — PETER WEBSTER REED — No. 062785-1 — LICENSED PROFESSIONAL ENGINEER

PARSONS
290 ELWOOD DAVIS ROAD, SUITE 312, LIVERPOOL, N.Y. 13088, PHONE: 315-451-9560

MUESER RUTLEDGE CONSULTING ENGINEERS
14 PENN PLAZA – 225 WEST 34th STREET
MRCE FILE NO. 9801

NOTICE
THIS DRAWING, THE PROPERTY OF HONEYWELL IS FURNISHED SUBJECT TO RETURN ON DEMAND AND THE CONDITION THAT THE INFORMATION AND TECHNOLOGY EMBODIED HEREIN SHALL NOT BE DISCLOSED OR USED AND THE DRAWING SHALL NOT BE REPRODUCED OR COPIED IN WHOLE OR IN PART EXCEPT AS PREVIOUSLY AUTHORIZED IN WRITING. ANY PERSON WHO MAY RECEIVE OR OBSERVE THIS DESIGN WILL BE HELD STRICTLY LIABLE FOR ANY VIOLATION WHETHER WILLFUL OR NEGLIGENT.

NO.	REVISION	BY	APPR.	APPR.	APPR.	APPR.	DATE	NO.	REVISION	BY	APPR.	APPR.	APPR.	APPR.	DATE
–	–	–	–				–								

REFERENCE	DWG. NO.	APPROVALS	DATE
		EQUIPMENT P.O. B/M NUMBERS:	

JOB NO.
CONTRACTOR'S JOB NO.
SCALE: 1"= 30'-0"

Honeywell
EMS ENGINEERING DEPARTMENT
101 COLUMBIA RD. BOX 2105
MORRISTOWN, NJ 07962

WILLIS AVE./SEMET TAR BEDS SITE IRM
SYRACUSE, NEW YORK

INTERIM SHORELINE RESTORATION
EXISTING SURFACE CONDITIONS PLAN

A.M.	06-24-11	S.Y.	06-24-11
DRAWN	DATE	CHK.	DATE
LOCATION	SPA-003A		REV

G:\DWGS\98\9801\NEW CONTRACT-OPT1\Contract-A\SPA-003A.dwg
Jun 24, 2011 at 4:55pm
cpeas

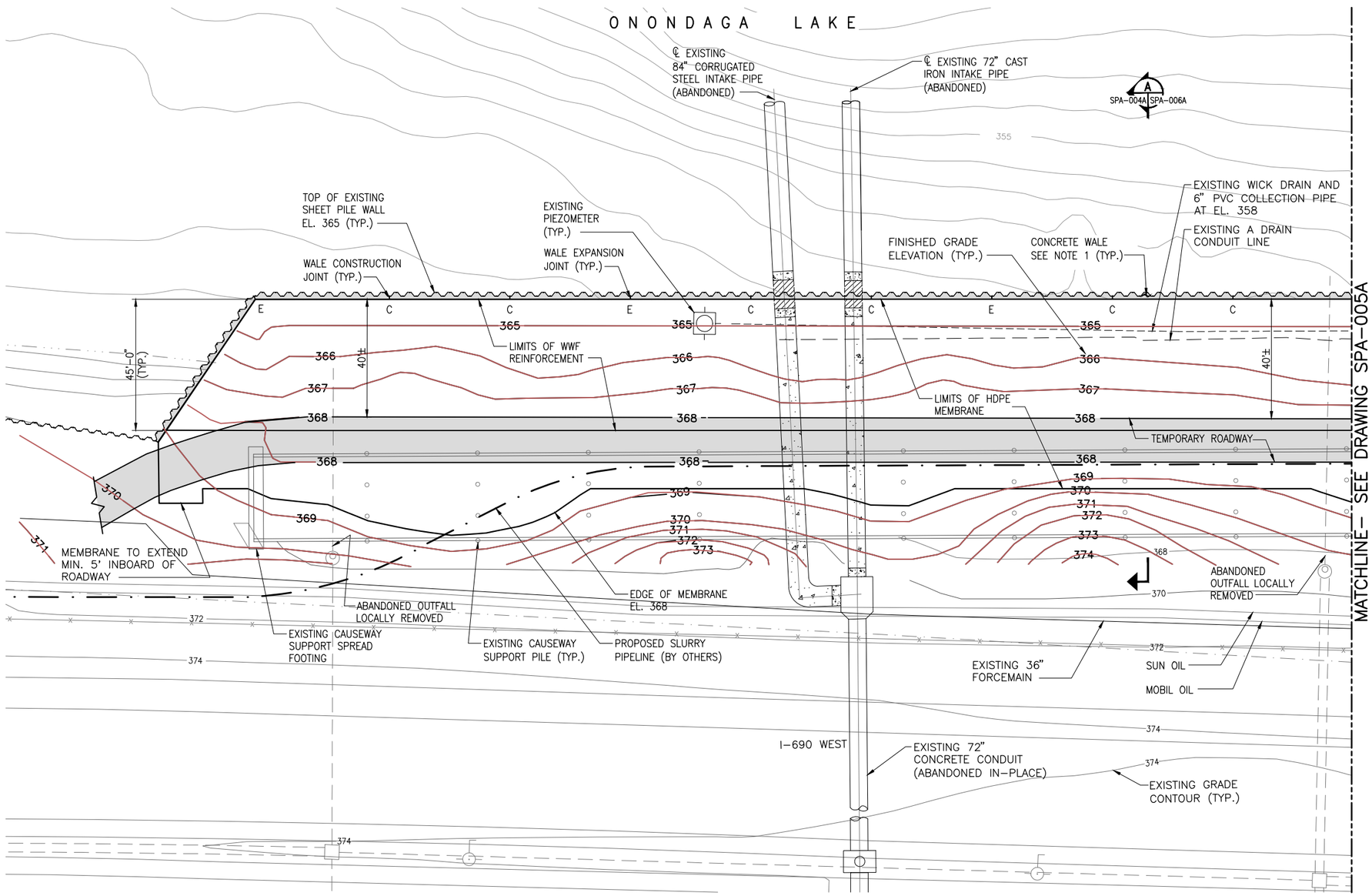

PLAN

20 10 0 20 40

SCALE: 1"=20'

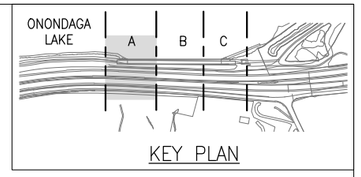

KEY PLAN

NOTES:

1. SEE DRAWING SPA-007A FOR CONCRETE WALE REINFORCING PLAN AND CONNECTION DETAILS.

DRAWING IS HALF-SIZE IF PLOTTED 11x17

HONEYWELL - RESTRICTED
PRINTS OF THIS DRAWING MAY NOT BE RELEASED WITHOUT PRIOR APPROVAL

STATE OF NEW YORK · PETER WEBSTER · No. 082785-1 · REGISTERED PROFESSIONAL ENGINEER

PARSONS
290 ELWOOD DAVIS ROAD, SUITE 312, LIVERPOOL, N.Y. 13088, PHONE: 315-451-9560

MUESER RUTLEDGE CONSULTING ENGINEERS
14 PENN PLAZA - 225 WEST 34th STREET
MRCE FILE NO. 9801

NOTICE

THIS DRAWING, THE PROPERTY OF HONEYWELL IS FURNISHED SUBJECT TO RETURN ON DEMAND AND THE CONDITION THAT THE INFORMATION AND TECHNOLOGY EMBODIED HEREIN SHALL NOT BE DISCLOSED OR USED AND THE DRAWING SHALL NOT BE REPRODUCED OR COPIED IN WHOLE OR IN PART EXCEPT AS PREVIOUSLY AUTHORIZED IN WRITING. ANY PERSON WHO MAY RECEIVE OR OBSERVE THIS DESIGN WILL BE HELD STRICTLY LIABLE FOR ANY VIOLATION WHETHER WILLFUL OR NEGLIGENT.

NO.	REVISION	BY	APPR.	APPR.	APPR.	APPR.	DATE	NO.	REVISION	BY	APPR.	APPR.	APPR.	APPR.	DATE
–	–	–	–				–								

REFERENCE	DWG. NO.

APPROVALS	DATE
EQUIPMENT P.O. B/M NUMBERS:	

JOB NO.
CONTRACTOR'S JOB NO.
SCALE: 1"=20'-0"

Honeywell
EMS ENGINEERING DEPARTMENT
101 COLUMBIA RD. BOX 2105
MORRISTOWN, NJ 07962

WILLIS AVE./SEMET TAR BEDS SITE IRM
SYRACUSE, NEW YORK

INTERIM SHORELINE RESTORATION DETAIL PLAN 1

A.M.	06-24-11	S.Y.	06-24-11
DRAWN	DATE	CHK.	DATE
LOCATION	SPA-004A		REV

G:\DWGS\98\9801\NEW CONTRACT-OPT1\Contract-A\SPA-004A.dwg
Jun 24, 2011 at 4:55pm
cpadz

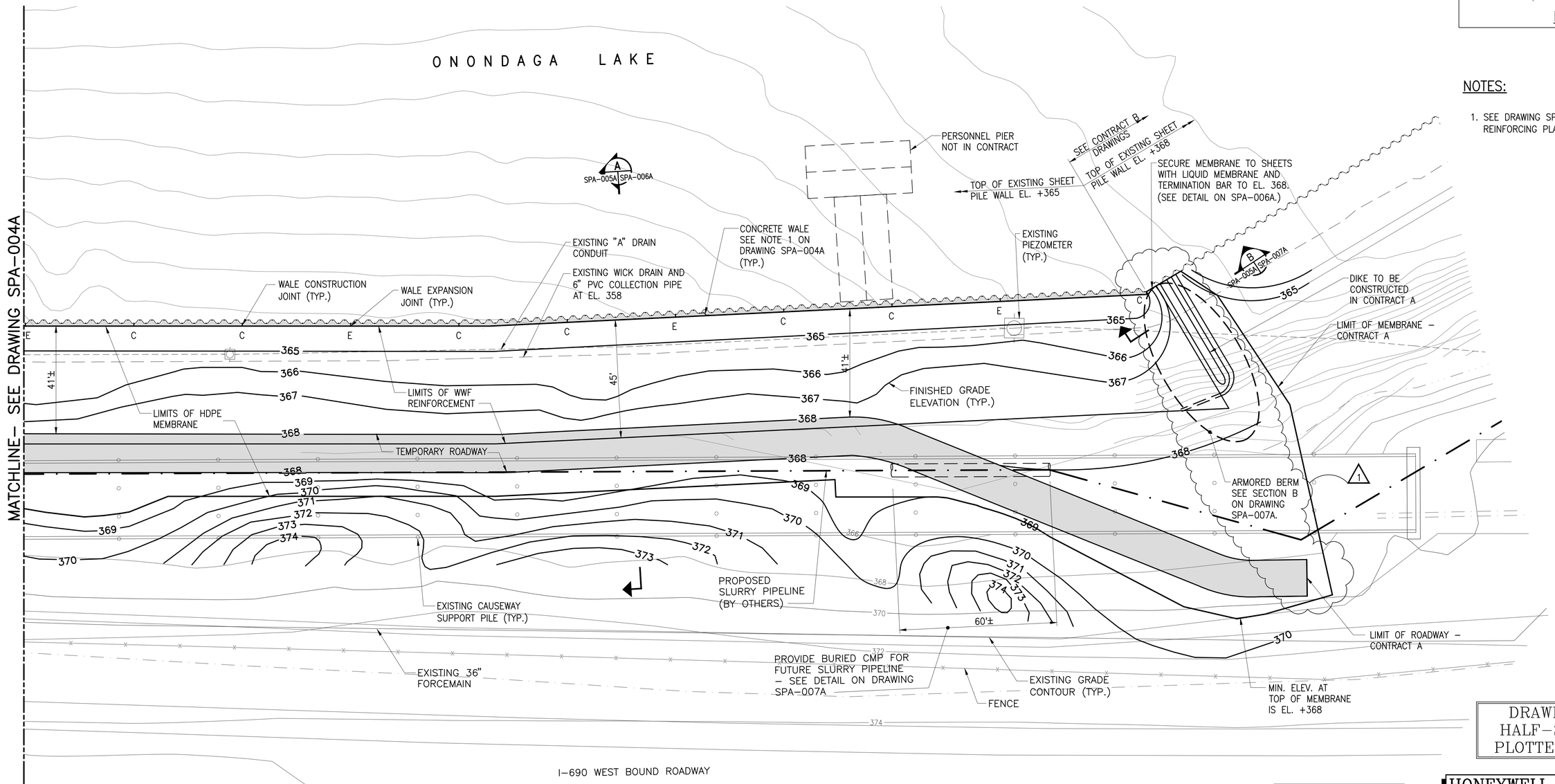

PLAN

20 10 0 20 40

SCALE: 1"=20'

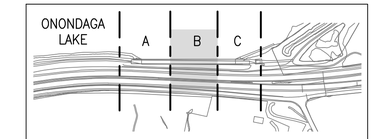

KEY PLAN

NOTES:

1. SEE DRAWING SPA–007A FOR CONCRETE WALE REINFORCING PLAN AND CONNECTION DETAILS.

DRAWING IS HALF–SIZE IF PLOTTED 11x17

HONEYWELL – RESTRICTED
PRINTS OF THIS DRAWING MAY NOT BE RELEASED WITHOUT PRIOR APPROVAL

STATE OF NEW YORK · PETER WEBSTER DEBRIND · No. 062785-1 · LICENSED PROFESSIONAL ENGINEER

PARSONS
290 ELWOOD DAVIS ROAD, SUITE 312, LIVERPOOL, N.Y. 13088, PHONE: 315–451–9560

MUESER RUTLEDGE CONSULTING ENGINEERS
14 PENN PLAZA – 225 WEST 34th STREET
MRCE FILE NO. 9801

NOTICE

THIS DRAWING, THE PROPERTY OF HONEYWELL IS FURNISHED SUBJECT TO RETURN ON DEMAND AND THE CONDITION THAT THE INFORMATION AND TECHNOLOGY EMBODIED HEREIN SHALL NOT BE DISCLOSED OR USED AND THE DRAWING SHALL NOT BE REPRODUCED OR COPIED IN WHOLE OR IN PART EXCEPT AS PREVIOUSLY AUTHORIZED IN WRITING. ANY PERSON WHO MAY RECEIVE OR OBSERVE THIS DESIGN WILL BE HELD STRICTLY LIABLE FOR ANY VIOLATION WHETHER WILLFUL OR NEGLIGENT.

NO.	REVISION	BY	APPR.	APPR.	APPR.	APPR.	DATE
1	REVISED CONTOURS AND TEMPORARY ROADWAY	S.Y.	–				08–09–11

NO.	REVISION	BY	APPR.	APPR.	APPR.	APPR.	DATE

REFERENCE	DWG. NO.	APPROVALS	DATE

EQUIPMENT P.O. B/M NUMBERS:

JOB NO.
CONTRACTOR'S JOB NO.
SCALE: 1"=20'–0"

WILLIS AVE./SEMET TAR BEDS SITE IRM
SYRACUSE, NEW YORK

INTERIM SHORELINE RESTORATION
DETAIL PLAN 2

Honeywell
EMS ENGINEERING DEPARTMENT
101 COLUMBIA RD. BOX 2105
MORRISTOWN, NJ 07962

A.M.	06–24–11	S.Y.	06–24–11
DRAWN	DATE	CHK.	DATE
LOCATION	SPA–005A		REV 1

cperez

Aug 09, 2011 at 3:04pm

G:\DWGS\98\9801\NEW CONTRACT–OPT1\Contract–A\SPA–005A.dwg

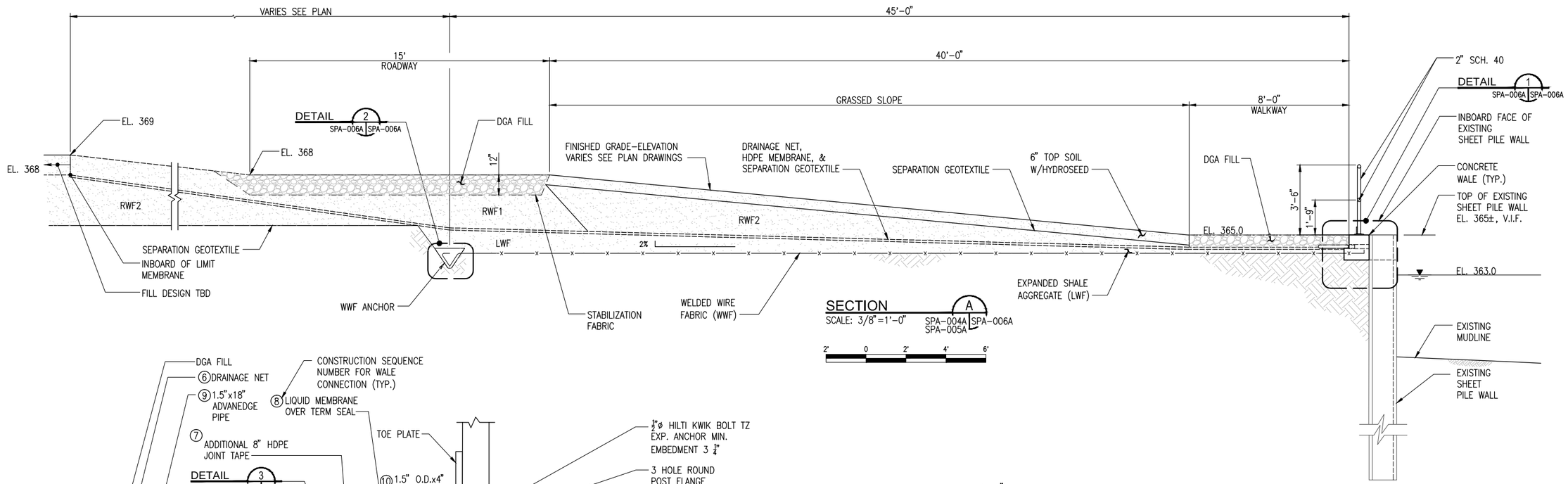

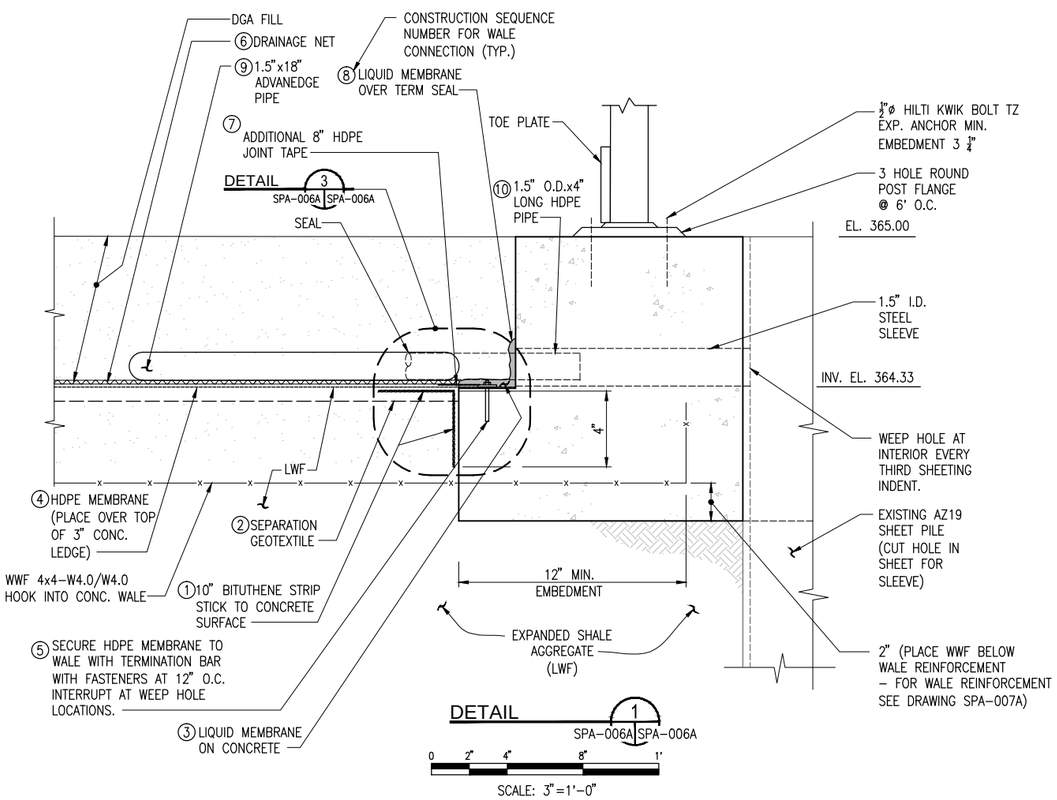

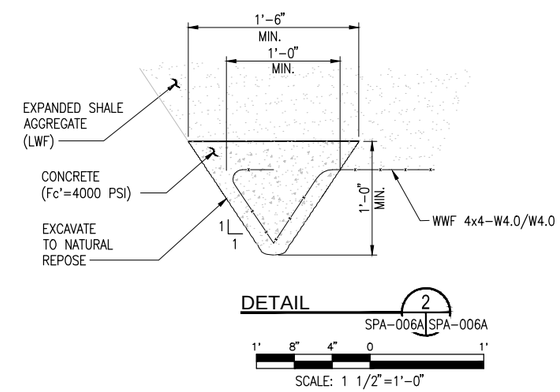

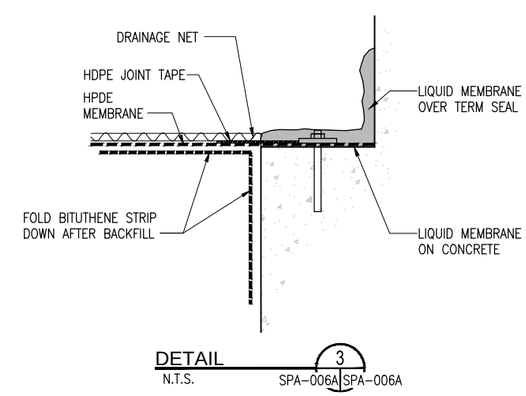

NOTES:

1. FOR CONCRETE WALE DETAILS SEE DRAWING SPA-007A.
2. WITHIN 45 FEET OF EXISTING SHEET PILE WALL, REMOVE ALL RWF BELOW HDPE MEMBRANE AND REPLACE WITH LWF.
3. FOR MATERIAL DEFINITION SEE MATERIAL LIST ON DRAWING SPA-009A.

DRAWING IS HALF-SIZE IF PLOTTED 11x17

HONEYWELL – RESTRICTED
PRINTS OF THIS DRAWING MAY NOT BE RELEASED WITHOUT PRIOR APPROVAL

STATE OF NEW YORK · PETER WEBSTER · No. 062785-1 · REGISTERED PROFESSIONAL ENGINEER

PARSONS
290 ELWOOD DAVIS ROAD, SUITE 312, LIVERPOOL, N.Y. 13088, PHONE: 315-451-9560

MUESER RUTLEDGE CONSULTING ENGINEERS
14 PENN PLAZA – 225 WEST 34th STREET
MRCE FILE NO. 9801

NOTICE

THIS DRAWING, THE PROPERTY OF HONEYWELL IS FURNISHED SUBJECT TO RETURN ON DEMAND AND THE CONDITION THAT THE INFORMATION AND TECHNOLOGY EMBODIED HEREIN SHALL NOT BE DISCLOSED OR USED AND THE DRAWING SHALL NOT BE REPRODUCED OR COPIED IN WHOLE OR IN PART EXCEPT AS PREVIOUSLY AUTHORIZED IN WRITING. ANY PERSON WHO MAY RECEIVE OR OBSERVE THIS DESIGN WILL BE HELD STRICTLY LIABLE FOR ANY VIOLATION WHETHER WILLFUL OR NEGLIGENT.

NO.	REVISION	BY	APPR.	APPR.	APPR.	APPR.	DATE
–	–	–	–				–

NO.	REVISION	BY	APPR.	APPR.	APPR.	APPR.	DATE

REFERENCE	DWG. NO.	APPROVALS	DATE

EQUIPMENT P.O. B/M NUMBERS:

JOB NO.
CONTRACTOR'S JOB NO.
SCALE: AS SHOWN

WILLIS AVE./SEMET TAR BEDS SITE IRM
SYRACUSE, NEW YORK

INTERIM SHORELINE RESTORATION
SECTION AND DETAILS 1

Honeywell
EMS ENGINEERING DEPARTMENT
101 COLUMBIA RD. BOX 2105
MORRISTOWN, NJ 07962

C.P.	06-24-11	S.Y.	06-24-11
DRAWN	DATE	CHK.	DATE
LOCATION	SPA-006A		REV

G:\DWGS\98\9801\NEW CONTRACT-OPT1\Contract-A\SPA-006A.dwg
Jun 24, 2011 at 4:55pm
cpdez

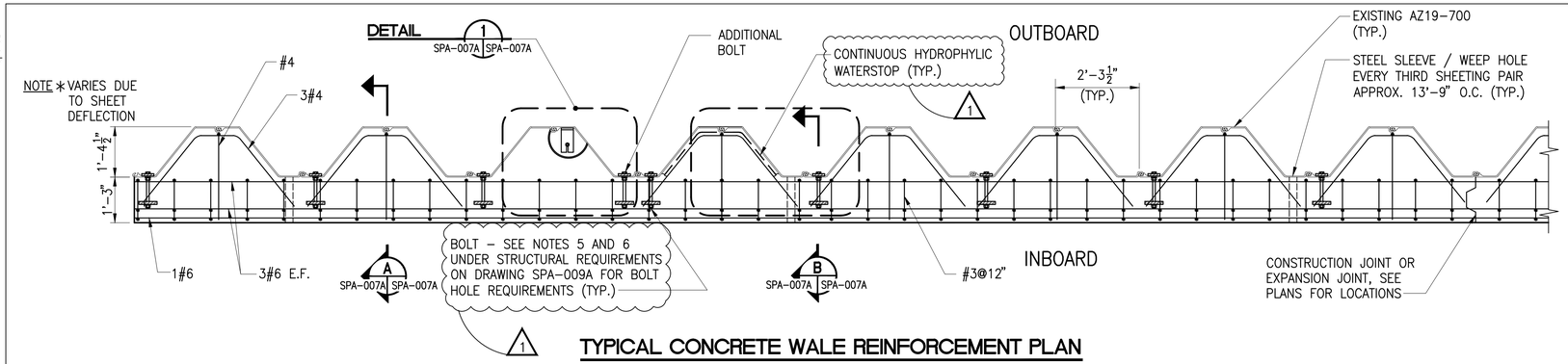

TYPICAL CONCRETE WALE REINFORCEMENT PLAN

SCALE: 1/2"=1'-0"

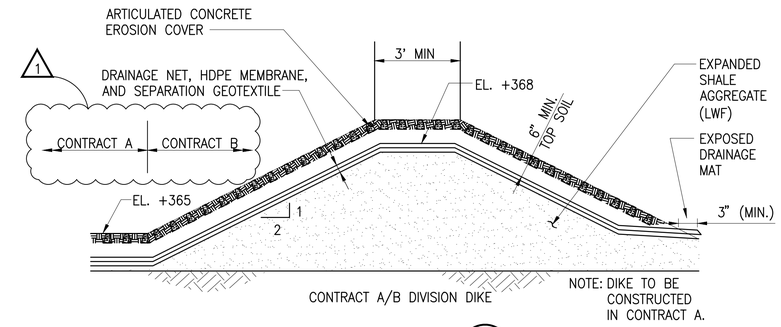

SECTION B

SCALE: 3/8"=1'-0" SPA-005A SPA-007A

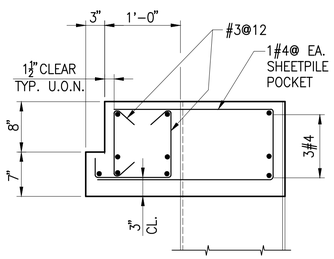

NOTE:
WWF EMBEDMENT INTO WALE NOT SHOWN FOR CLARITY. SEE DETAIL 1 ON DRAWING SPA-006A.

SECTION A

SPA-007A SPA-007A

SCALE: 1"=1'-0"

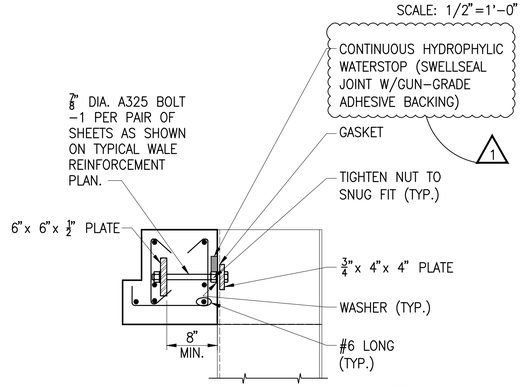

NOTE:
STEEL SLEEVE/WEEP HOLE NOT SHOWN FOR CLARITY. SEE DETAIL 1 ON DRAWING SPA-006A.

SECTION B

SPA-007A SPA-007A

SCALE: 1"=1'-0"

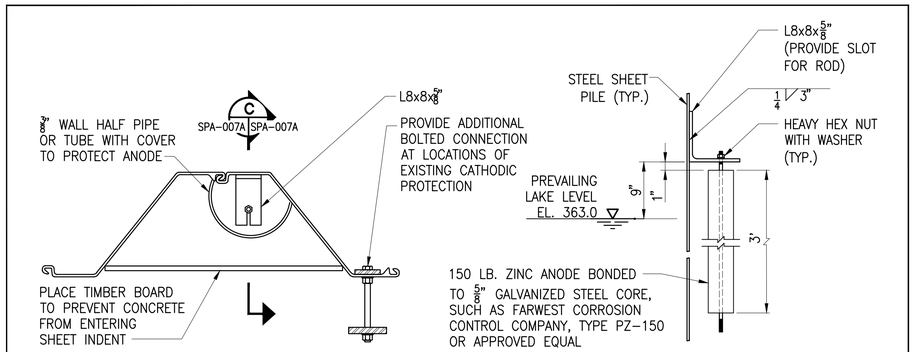

TYPICAL EXISTING CATHODIC PROTECTION DETAIL

DETAIL 1 SPA-007A SPA-007A

N.T.S.

OUTBOARD INBOARD

SECTION C

N.T.S. SPA-007A SPA-007A

NOTES:

1. DIKE IS TO MAINTAIN LAKE LEVEL WITHIN CONTRACT A LIMITS DURING HIGH LAKE LEVEL EVENTS.
2. SECURE HDPE MEMBRANE TO SHEETING AT CONTRACT A/B INTERFACE (SHEETS AT EL. +368) WITH TERMINATION BAR AND LIQUID MEMBRANE TO TOP OF SHEETS.
3. DAYLIGHT DRAINAGE NET IN CONTRACT B, AS SHOWN.
4. ARTICULATED CONCRETE EROSION COVER FOR BERM PROTECTION SHALL BE SHORELOC BLOCKS OR APPROVED ALTERNATIVE PLANTABLE, ARTICULATED CONCRETE BLOCK EROSION CONTROL SYSTEM.
5. SLOPE EROSION COVER TO EL. +368 AT SHEETING.

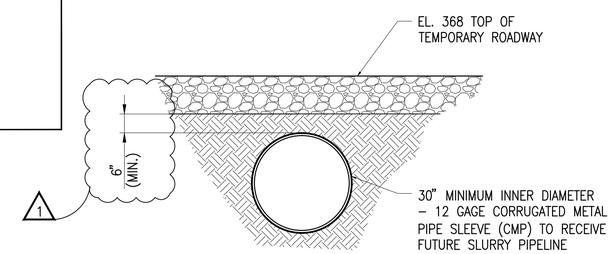

TYPICAL SECTION AT CMP SLEEVE FOR FUTURE SLURRY PIPELINE

SCALE: 1/2"=1'-0"

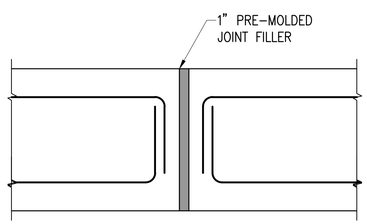

NOTE:
LONGITUDINAL BARS ONLY SHOWN.

TYP. EXPANSION JOINT PLAN

SCALE: 1-1/2"=1'-0"

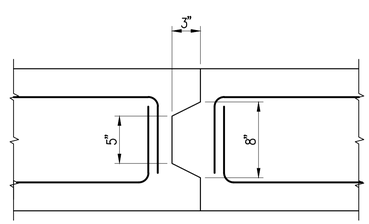

NOTE:
LONGITUDINAL BARS ONLY SHOWN.

TYP. CONSTRUCTION JOINT PLAN

SCALE: 1-1/2"=1'-0"

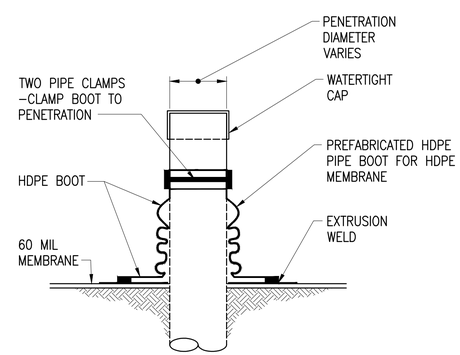

HDPE PIPE BOOT DETAIL

N.T.S.

NOTES:

1. CONSTRUCT PIPE BOOT DETAIL AT ALL EXISTING INSTRUMENT LOCATIONS AND MANHOLE PENETRATIONS.

DRAWING IS HALF-SIZE IF PLOTTED 11x17

STATE OF NEW YORK · PETER WEBSTER BENNETT · No. 062785 · LICENSED PROFESSIONAL ENGINEER

HONEYWELL – RESTRICTED
PRINTS OF THIS DRAWING MAY NOT BE RELEASED WITHOUT PRIOR APPROVAL

PARSONS
290 ELWOOD DAVIS ROAD, SUITE 312, LIVERPOOL, N.Y. 13088, PHONE: 315-451-9560

MUESER RUTLEDGE CONSULTING ENGINEERS
14 PENN PLAZA – 225 WEST 34th STREET
MRCE FILE NO. 9801

NOTICE
THIS DRAWING, THE PROPERTY OF HONEYWELL IS FURNISHED SUBJECT TO RETURN ON DEMAND AND THE CONDITION THAT THE INFORMATION AND TECHNOLOGY EMBODIED HEREIN SHALL NOT BE DISCLOSED OR USED AND THE DRAWING SHALL NOT BE REPRODUCED OR COPIED IN WHOLE OR IN PART EXCEPT AS PREVIOUSLY AUTHORIZED IN WRITING. ANY PERSON WHO MAY RECEIVE OR OBSERVE THIS DESIGN WILL BE HELD STRICTLY LIABLE FOR ANY VIOLATION WHETHER WILLFUL OR NEGLIGENT.

NO.	REVISION	BY	APPR.	APPR.	APPR.	APPR.	DATE
1	ADDED HYDROPHYLIC WATERSTOP	S.Y.	–				08-09-11

NO.	REVISION	BY	APPR.	APPR.	APPR.	APPR.	DATE

REFERENCE	DWG. NO.	APPROVALS	DATE

EQUIPMENT P.O. B/M NUMBERS:

JOB NO.
CONTRACTOR'S JOB NO.
SCALE: AS SHOWN

WILLIS AVE./SEMET TAR BEDS SITE IRM
SYRACUSE, NEW YORK

INTERIM SHORELINE RESTORATION
SECTIONS AND DETAILS 2

Honeywell
EMS ENGINEERING DEPARTMENT
101 COLUMBIA RD. BOX 2105
MORRISTOWN, NJ 07962

A.M.	06-24-11	S.Y.	06-24-11
DRAWN	DATE	CHK.	DATE
LOCATION	SPA-007A		REV 1

cperez
Aug 09, 2011 at 3:03pm
G:\DWGS\98\9801\NEW CONTRACT-OPT1\Contract-A\SPA-007A.dwg

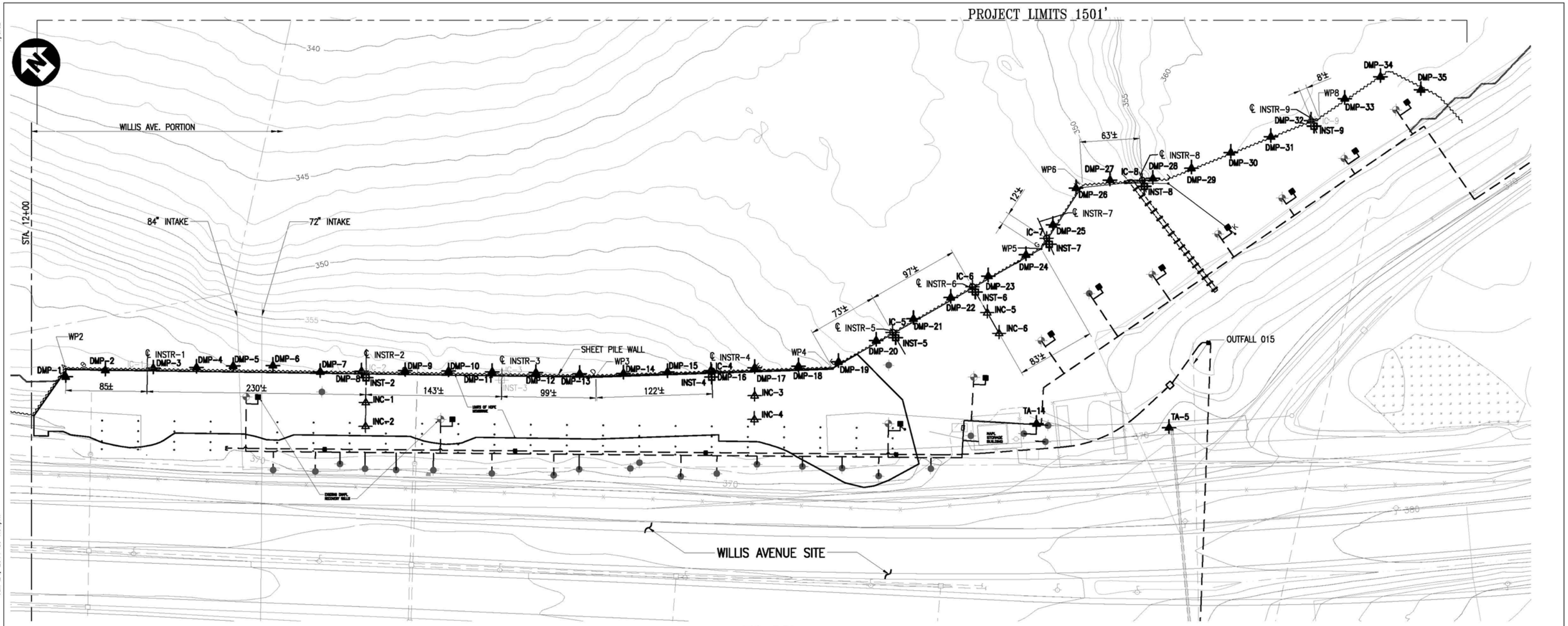

PLAN

50 25 0 50 100

SCALE: 1"=50'

LEGEND:

- DNAPL RECOVERY SYSTEM – EXISTING AND FUTURE
- DMP-13 – DEFORMATION MONITORING POINT
- IC-6 – WALL INSTRUMENTATION LOCATION (2008)
- INST-7 – SOIL INSTRUMENTATION LOCATION (2008)
- INC-6 – SAS LOCATION (2011)
- INST-3 IC-1 – NONFUNCTIONAL INCLINOMETER CASING
- MANHOLE

(DMP-13 through MANHOLE: EXISTING)

NOTES:

1. RE-ESTABLISH DMP POINTS OBSCURED BY CASTING CONCRETE WALE BY CASTING SUITABLE MARKER INTO WALE.
2. BOOT ALL EXISTING INSTRUMENTS THROUGH MEMBRANE.
3. CONTRACTOR TO INSTALL BOOT AROUND EXISTING DNAPL WELLS. IF WELL ACCESS BOX NOT INSTALLED, BOOT MAY BE OF TEMPORARY DESIGN.
4. WALL INSTRUMENTATION LOCATIONS INCLUDE INCLINOMETER CASING.
5. SOIL INSTRUMENT LOCATIONS INCLUDE GROUTED-IN-PLACE PIEZOMETERS, INCLINOMETER CASING AND EXTENSOMETER RINGS.
6. HDPE "BOOT" SHALL BE PLACED AROUND EXISTING INCLINOMETER CASINGS, DNAPL RECOVERY WELL CASING, INSTRUMENT CASINGS AND MANHOLES EXTENDING THROUGH THE PROPOSED HDPE MEMBRANE. SEE DETAIL ON DRAWING SPA-007A.
7. AT FUTURE DNAPL RECOVERY WELL LOCATIONS, PLACE HDPE "BOOT" WITH PROPER DIAMETER HDPE CASING EXTENDING FROM EL. +363 TO +368. SEE DETAIL ON SPA-007A.
8. NONFUNCTIONAL INCLINOMETER CASING SHALL BE BACKFILLED AND SEALED IN WITH CEMENT-BENTONITE GROUT PLACED WITH TREMIE.
9. WATERTIGHT CAPS SHALL BE PLACED ON EXISTING INCLINOMETER CASINGS.

DRAWING IS HALF-SIZE IF PLOTTED 11x17

HONEYWELL – RESTRICTED
PRINTS OF THIS DRAWING MAY NOT BE RELEASED WITHOUT PRIOR APPROVAL

STATE OF NEW YORK – PETER WEBSTER BOND – No. 062785 – LICENSED PROFESSIONAL ENGINEER

PARSONS
290 ELWOOD DAVIS ROAD, SUITE 312, LIVERPOOL, N.Y. 13088, PHONE: 315-451-9560

MUESER RUTLEDGE CONSULTING ENGINEERS
14 PENN PLAZA – 225 WEST 34th STREET
MRCE FILE NO. 9801

NOTICE
THIS DRAWING, THE PROPERTY OF HONEYWELL IS FURNISHED SUBJECT TO RETURN ON DEMAND AND THE CONDITION THAT THE INFORMATION AND TECHNOLOGY EMBODIED HEREIN SHALL NOT BE DISCLOSED OR USED AND THE DRAWING SHALL NOT BE REPRODUCED OR COPIED IN WHOLE OR IN PART EXCEPT AS PREVIOUSLY AUTHORIZED IN WRITING. ANY PERSON WHO MAY RECEIVE OR OBSERVE THIS DESIGN WILL BE HELD STRICTLY LIABLE FOR ANY VIOLATION WHETHER WILLFUL OR NEGLIGENT.

NO.	REVISION	BY	APPR.	APPR.	APPR.	APPR.	DATE
–	–	–	–				–

NO.	REVISION	BY	APPR.	APPR.	APPR.	APPR.	DATE

REFERENCE	DWG. NO.	APPROVALS	DATE

EQUIPMENT P.O. B/M NUMBERS:

JOB NO.
CONTRACTOR'S JOB NO.
SCALE: 1"=50'-0"

WILLIS AVE./SEMET TAR BEDS SITE IRM
SYRACUSE, NEW YORK

INTERIM SHORELINE RESTORATION
EXISTING INSTRUMENTATION PLAN AND NOTES

Honeywell
EMS ENGINEERING DEPARTMENT
101 COLUMBIA RD. BOX 2105
MORRISTOWN, NJ 07962

E.C.	06-24-11	J.L.V.	06-24-11
DRAWN	DATE	CHK.	DATE
LOCATION	SPA-008A		REV

cperez

Jun 24, 2011 at 4:54pm

G:\DWGS\98\9801\NEW CONTRACT-OPT1\Contract-A\SPA-008A.dwg

NOTES:

1. ELEVATIONS SHOWN REFER TO USGS NAVD 88 DATUM.
2. BASE PLANS OBTAINED FROM TOPOGRAPHIC MAP PREPARED BY LOCKWOOD MAPPING COMPANY BASED ON AERIAL PHOTOGRAPHS TAKEN APRIL 14, 2000. ACTUAL CONFIGURATION OF CAUSEWAY SURFACE, SURFACE FEATURES, ETC. AT THE TIME OF CONSTRUCTION MAY DIFFER FROM THAT SHOWN ON THE DRAWINGS.
3. BORING LOCATIONS AND LOGS ARE AVAILABLE FROM THE OWNER FOR REVIEW AND INTERPRETATION
4. PROVIDE SEPARATION AND CONTAINMENT OF ALL EXCAVATED MATERIAL. PREVENT ANY DEBRIS FROM ENTERING ONONDAGA LAKE.
5. CONTRACTOR IS FULLY RESPONSIBLE FOR ALL SITE SAFETY, INCLUDING BUT NOT LIMITED TO TEMPORARY SAFETY RAILING ALONG THE SHEET PILE WALL.
6. ALLOW ACCESS TO EXISTING INSTRUMENTATION FOR READINGS BY ENGINEERS. INSTRUMENTS DAMAGED BY CONSTRUCTION WILL BE REPLACED IN-KIND AT THE EXPENSE OF THE CONTRACTOR.

STRUCTURAL REQUIREMENTS:

1. ALL CONCRETE SHALL BE 4000 PSI MINIMUM 28 DAY STRENGTH, PORTLAND CEMENT TYPE II AIR ENTRAINED. CONCRETE WORK SHALL CONFORM TO ACI 306 – COLD WEATHER CONCRETING.
2. ALL REINFORCING STEEL SHALL CONFORM TO ASTM A615, GRADE 60.
3. ALL STRUCTURAL STEEL SHAPES SHALL CONFORM TO ASTM A572, GRADE 50. STRUCTURAL PLATES AND MISCELLANEOUS STEEL SHALL CONFORM TO ASTM A36.
4. WELDED WIRE FABRIC (WWF) SHALL BE GALVANIZED STEEL AND CONFORM TO ASTM A82.
5. ALL HOLES THROUGH EXISTING SHEET PILE BULKHEAD REQUIRED FOR INSTALLATION OF BOLTS AT CONCRETE WALE SHALL BE DRILLED IN. BURNING HOLES THROUGH SHEET PILE IS NOT PERMITTED.
6. AFTER INSTALLATION OF BOLTS AND PRIOR TO PLACEMENT OF CONCRETE FOR THE CONCRETE WALE, THE EXISTING SHEET PILE COATING SHALL BE REPAIRED IN ACCORDANCE WITH MANUFACTURER'S RECOMMENDATIONS.

1

SOIL COMPACTION REQUIREMENTS:

1. COMPACT DGA WALKWAY ALONG SHEETING WITH A MINIMUM OF THREE PASSES OF A PLATE TAMPER DESIGNED FOR SOIL COMPACTION.
2. COMPACT REGULAR WEIGHT FILL OUTSIDE ROADWAY TO MINIMUM 85% STANDARD PROCTOR MAXIMUM DRY DENSITY MDD (ASTM D698).
3. COMPACT REGULAR WEIGHT FILL BELOW ROADWAY AND ROADWAY DGA TO MINIMUM 92% MDD (ASTM D698), IN MAXIMUM 12 INCH LOOSE LIFTS.
4. COMPACT ROADWAY DGA TO MINIMUM 95% STANDARD PROCTOR MDD IN TWO EQUAL LIFTS.
5. TAMP TOPSOIL UNTIL ABLE TO CARRY FOOT TRAFFIC. NO COMPACTION OF LWF.

CONSTRUCTION SEQUENCE:

1. RELOCATE EXISTING UTILITIES SHOWN ON PLANS.
2. EXCAVATE FOR INSTALLATION OF WWF, WWF ANCHORAGE AND MEMBRANE. STORE EXCAVATED MATERIALS AT LEAST 30 FEET FROM SHEETING. DO NOT MIX SOIL AND LIGHT WEIGHT FILL MATERIALS. MAINTAIN CONSTRUCTION EQUIPMENT AS FAR FROM SHEETING AS POSSIBLE.
3. DRILL HOLES IN EXISTING SHEETING AND INSTALL BOLTS AND PLATES, REINFORCING BARS, AND STEEL SLEEVES FOR CONCRETE WALE AS SHOWN ON THE CONTRACT DRAWINGS.
4. PLACE WWF WITH THE REQUIRED EMBEDMENT INTO WALE AND ANCHORAGE.
5. CAST CONCRETE WALE AND ANCHORAGE.
6. PLACE LIGHT WEIGHT EXPANDED SHALE AGGREGATE FILL (LWF), DRAINAGE NET, HDPE MEMBRANE AND SEPARATION GEOTEXTILE AS SHOWN ON DRAWINGS IN ACCORDANCE WITH SEQUENCE SHOWN. GRADE AS NEEDED TO OBTAIN MEMBRANE CONTOURS. SECURE MEMBRANE TO WALE WITH TERMINATION BAR.
7. PLACE ADVANEDGE PIPE. CUT HOLES IN ADVANEDGE PIPE FOR HDPE PIPE OUTLETS AT WEEP HOLES. SECURE PIPE OUTLETS TO ADVANEDGE PIPE WITH EXTRUSION WELD. INSERT PIPE OUTLET INTO WEEP HOLE SLEEVE.
8. PLACE LIGHT WEIGHT FILL, SEPARATION GEOTEXTILE, ROADWAY STABILIZATION FABRIC, REGULAR WEIGHT FILL (RWF), TOP SOIL AND DGA FILL TO THE REQUIRED GRADE ELEVATIONS TO ACHIEVE FINISHED GRADES AS SHOWN ON THE PLAN DRAWINGS. A GEOTEXTILE SEPARATION FABRIC IS TO BE PLACED ABOVE LIGHT WEIGHT FILL AT ALL LOCATIONS TO PRECLUDE MIGRATION OF SOIL INTO LWF.
9. COMPACT PERIMETER WALKWAY DGA AND TOP SOIL FILL WITH A PLATE TAMPER. COMPACT REGULAR WEIGHT FILL WITH A 2-TON OR EQUIVALENT ROLLER. COMPACT ROADWAY DGA FILL WITH A 6 TON OR EQUIVALENT ROLLER.
10. INSTALL FENCE ON CONCRETE WALE. (FENCE MAY BE DELETED BY OWNER)
11. HYDROSEED TOPSOIL.

GEOSYNTHETIC AND WWF NOTES:

1. ALL OVERLAPS FOR SEPARATION AND STABILIZATION GEOTEXTILES WILL BE MINIMUM 18 INCHES. LAPS FOR DRAINAGE NET WILL BE SIX INCHES.
2. STORE, HANDLE, INSTALL, FULLY WELD AND TEST HDPE MEMBRANE IN ACCORDANCE WITH SPECIFICATION.
3. VERIFY THAT WWF HAS BEEN PLACED TO THE DIMENSIONS SHOWN. ANY SPLICES IN WWF MADE PARALLEL TO THE SHEETING MUST MOBILIZE THE FULL STRENGTH OF THE WWF UNDER VERY SMALL STRAIN (SPLICE DETAIL TO BE APPROVED BY ENGINEER).
4. BUTT LAP WWF IN DIRECTION PERPENDICULAR TO SHEETING (NO SPLICE OR OVERLAP DISTANCE REQUIRED).
5. WWF TO BE PLACED FLAT AGAINST THE GROUND. BULGES IN WWF TO BE SMOOTHED REASONABLY FLAT.

EARTHWORK NOTES:

1. OPERATE ONLY LOW PRESSURE EQUIPMENT DIRECTLY ON LWF TO AVOID CRUSHING OR COMPACTING LWF.
2. PREVENT FINES FROM ENTERING LWF. INSTALL SEPARATION FABRICS OVER LWF AS SOON AS PRACTICAL. PREVENT STORM WATER RUNOFF FROM CARRYING SILT INTO LWF.
3. MAINTAIN CONSTRUCTION EQUIPMENT AS FAR FROM SHEETING AS IS PRACTICAL.
4. FOLLOW ALL SEDIMENT AND EROSION CONTROL REQUIREMENTS.
5. LANDSCAPING REQUIREMENTS INBOARD OF MEMBRANE NOT SHOWN ON THESE DRAWINGS.

MATERIALS LIST

	MATERIALS LIST	DESCRIPTION
1	SEPARATION GEOTEXTILE	NON-WOVEN POLYPROPYLENE GEOTEXTILE, MIN. 7 OZ/SY
2	HDPE MEMBRANE	60 MIL HDPE
3	DRAINAGE NET	US 160 GN GEONET AS MANUFACTURED BY U.S. FABRIC, CINCINNATI OHIO, OR APPROVED EQUAL
4	ADVANEDGE PIPE	ADVANEDGE PIPE SHALL BE 18 IN. - 4 OZ. FABRIC - AS MANUFACTURED BY ADS OF HILLIARD, OHIO, OR APPROVED EQUAL - LENGTH AS SHOWN ON DRAWINGS
5	DENSE GRADED AGGREGATE (DGA) FILL	DGA SHALL CONSIST OF CRUSHED ROCK PRODUCT FROM HARD DURABLE STONE. SEE GRADATION REQUIREMENTS BELOW
6	BITUTHENE STRIP	10 INCH BITUTHENE STRIP - BITUTHENE 3000 - AS MANUFACTURED BY GRACE CONSTRUCTION PRODUCTS OR APPROVED EQUAL
7	LIQUID MEMBRANE	LIQUID MEMBRANE SEALANT AS MANUFACTURED BY GRACE CONSTRUCTION OR APPROVED EQUAL
8	STABILIZATION FABRIC	US 4800 WOVEN GEOTEXTILE AS MANUFACTURED BY US FABRICS, CINCINNATTI, OHIO
9	REGULAR WEIGHT FILL BELOW ROADWAY (RWF1)	WELL-GRADED SAND, LESS THAN 8% FINES (GRADATION IS TO BE APPROVED)
10	REGULAR WEIGHT FILL BELOW SLOPE (RWF2)	WELL-GRADED SAND, LESS THAN 15% FINES (GRADATION IS TO BE APPROVED)
11	LIGHTWEIGHT FILL (LWF)	COARSE EXPANDED SHALE AGGREGATE HAVING A SPECIFIC GRAVITY OF 1.5 +0.05 AND A TOTAL WEIGHT NO GREATER THAN 68 LBS/CF "SATURATED SURFACE DRY" WHEN COMPACTED IN ACCORDANCE WITH ASTM D 698 (STANDARD PROCTOR COMPACTION EFFORT)

DENSE GRADED AGGREGATE (DGA)

SEIVE DESIGNATION	PERCENTAGE BY MASS PASSING SQUARE MESH SEIVES
50 MM	100
37.5 MM	70 - 100
19.0 MM	50 - 85
4.75 MM	30 - 55
300 mM	8 - 24
75 mM	3 - 10

DRAWING IS HALF-SIZE IF PLOTTED 11x17

HONEYWELL – RESTRICTED
PRINTS OF THIS DRAWING MAY NOT BE RELEASED WITHOUT PRIOR APPROVAL

STATE OF NEW YORK · PETER WEBSTER · No. 082785-1 · PROFESSIONAL ENGINEER

PARSONS
290 ELWOOD DAVIS ROAD, SUITE 312, LIVERPOOL, N.Y. 13088, PHONE 315-451-9560

MUESER RUTLEDGE CONSULTING ENGINEERS
14 PENN PLAZA – 225 WEST 34th STREET
MRCE FILE NO. 9801

NOTICE
THIS DRAWING, THE PROPERTY OF HONEYWELL IS FURNISHED SUBJECT TO RETURN ON DEMAND AND THE CONDITION THAT THE INFORMATION AND TECHNOLOGY EMBODIED HEREIN SHALL NOT BE DISCLOSED OR USED AND THE DRAWING SHALL NOT BE REPRODUCED OR COPIED IN WHOLE OR IN PART EXCEPT AS PREVIOUSLY AUTHORIZED IN WRITING. ANY PERSON WHO MAY RECEIVE OR OBSERVE THIS DESIGN WILL BE HELD STRICTLY LIABLE FOR ANY VIOLATION WHETHER WILLFUL OR NEGLIGENT.

NO.	REVISION	BY	APPR.	APPR.	APPR.	APPR.	DATE
1	ADDED NOTES	S.Y.	–				08-09-11

NO.	REVISION	BY	APPR.	APPR.	APPR.	APPR.	DATE

REFERENCE	DWG. NO.	APPROVALS	DATE
		EQUIPMENT P.O. B/M NUMBERS:	

JOB NO.
CONTRACTOR'S JOB NO.
SCALE: NONE

WILLIS AVE./SEMET TAR BEDS SITE IRM
SYRACUSE, NEW YORK

INTERIM SHORELINE RESTORATION
GENERAL NOTES

Honeywell
EMS ENGINEERING DEPARTMENT
101 COLUMBIA RD. BOX 2105
MORRISTOWN, NJ 07962

DRAWN	DATE	CHK.	DATE
A.M.	06-24-11	S.Y.	06-24-11

LOCATION: SPA-009A
REV: 1

cperez
Aug 09, 2011 at 3:02pm
G:\DWGS\98\9801\NEW CONTRACT-OPT1\Contract-A\SPA-009A.dwg