May 12, 2010 – 11:02am

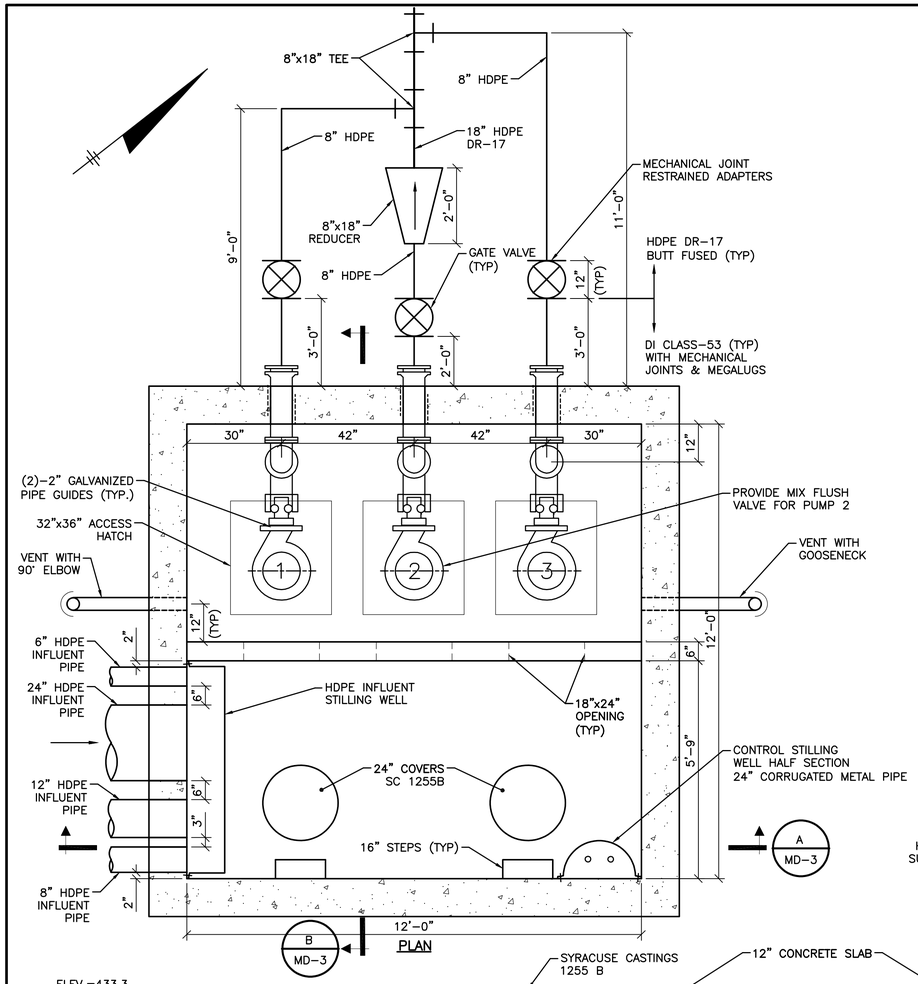

PUMP SCHEDULE

TYPE	SUBMERSIBLE BACKWASH PUMPS (3)
MFGR, MODEL	FLYGT, MODEL NP3153.181, TYPE LT
SIZE	8" DISCHARGE
IMPELLER DIA	217 MM
MOTOR HP RATING	20 HP
RATED CAPACITY/TDH	1600 GPM/30 FT
PUMP SPEED CONTROL	CONSTANT

CONTROL ELEVATION SCHEDULE

	TRANSDUCER CONTROL	FLOAT CONTROL
REDUNDANT HIGH ALARM	–	428.5
HIGH LEVEL ALARM	428	–
START LAG PUMP	427	–
LEAD PUMP ON	426	–
STOP BOTH PUMPS *	423.5	–
REDUNDANT OFF AND L.L. ALARM	–	423.0

* ALTERNATE ALL THREE PUMPS

NOTES:

1. ALL PIPES AND CONDUITS ENTERING P.S. SHALL BE INSTALLED WITH CAST IRON WALL SLEEVES AND MODULAR LINK SEALS FOR WATERTIGHTNESS.
2. 4" FRP VENTS SHALL BE INSTALLED UNDERGROUND FROM PUMPING STATION TO LOCATION SHOWN ON SITE PLAN. VENT PIPE SHALL BE APPROXIMATELY 3' ABOVE FINISHED GRADE (SEE VENT DETAIL THIS SHEET).
3. ALL EXPOSED METAL ITEMS SUCH AS PIPING, SUPPORTS, VALVES AND ETC. NOT PROVIDED WITH A FACTORY COATING SHALL BE PAINTED IN THE FIELD IN ACCORDANCE WITH THE FIELD PAINTING TECHNICAL SPECIFICATION.
4. STAINLESS STEEL SHALL BE GRADE 316 MINIMUM.
5. CONTROL TRANSDUCER TO BE 6-INCHES ABOVE FINISHED FLOOR OF WET WELL.

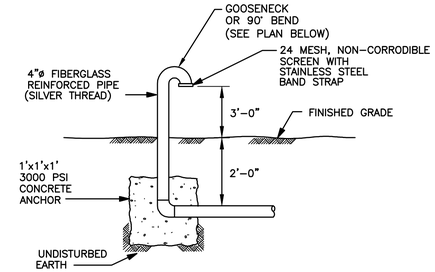

VENT DETAIL

NOT TO SCALE

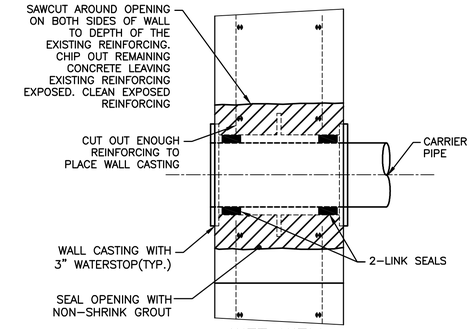

WET WELL WALL PENETRATION DETAIL

NOT TO SCALE

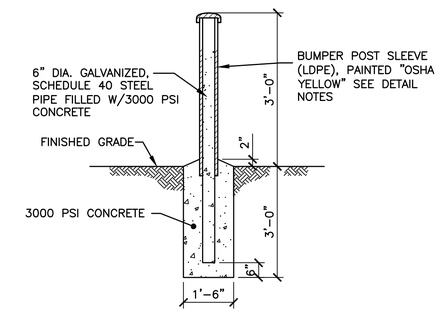

TYPICAL 6" BOLLARD DETAIL

NOT TO SCALE

DETAIL NOTES:

1. BUMPER POST SLEEVES SHALL BE DOME TOP, MADE FROM LOW DENSITY POLYETHYLENE (LDPE), WITH ULTRA VIOLET AND ANTI-STATIC ADDITIVES. FINISH SHALL BE GLOSSY AND SMOOTH WITH NO RIDGES.
2. WALL THICKNESS OF BUMPER POST SLEEVES SHALL BE 0.25 INCHES MINIMUM.
3. BUMPER POST SLEEVE SHALL BE FASTENED TO POST WITH NEOPRENE TAPE SYSTEM.

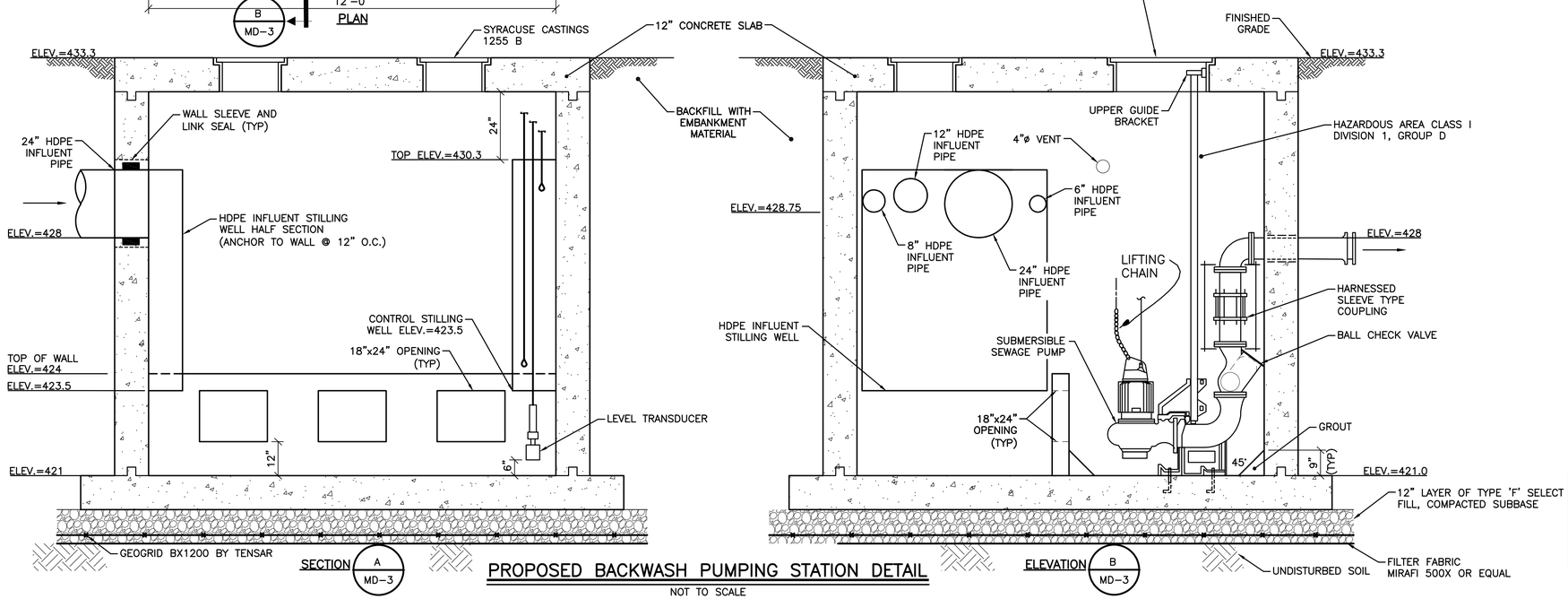

PROPOSED BACKWASH PUMPING STATION DETAIL

NOT TO SCALE

THIS DRAWING WAS PREPARED AT THE SCALE INDICATED IN THE TITLE BLOCK. INACCURACIES IN THE STATED SCALE MAY BE INTRODUCED WHEN DRAWINGS ARE REPRODUCED BY ANY MEANS. USE THE GRAPHIC SCALE BAR IN THE TITLE BLOCK TO DETERMINE THE ACTUAL SCALE OF THIS DRAWING.

IT IS A VIOLATION OF LAW FOR ANY PERSON, UNLESS ACTING UNDER THE DIRECTION OF A LICENSED ENGINEER, TO ALTER THIS DOCUMENT.

PRELIMINARY NOT FOR CONSTRUCTION

DATE: 5/12/10

NO.	DATE	REVISION	INIT.
B	5/12/10	DP #2 FOR NYSDEC AND COUNTY REVIEW	
A	4/09/10	DP #2 DRAFT FOR HONEYWELL REVIEW	

O'BRIEN & GERE ENGINEERS INC.

2010 © O'Brien and Gere Engineers, Inc.

HONEYWELL INTERNATIONAL, INC.
DP #2
WATER TREATMENT PLANT
TOWN OF CAMILLUS, NEW YORK

PUMPING STATION SECTION, PLAN AND DETAILS

IN CHARGE OF M.E. REWKOWSKI
DESIGNED BY MER CHECKED BY RGD
DRAWN BY SLJ/DOK

FILE NO. 1163.45613-MD3
DATE MAY 2010

MD-3

I:\Honeywell.1163\45613.Sca-Wtp-Details\Docs\DWG\DP-2\Sheets\44523-MD3.dwg

May 12, 2010 – 11:02am

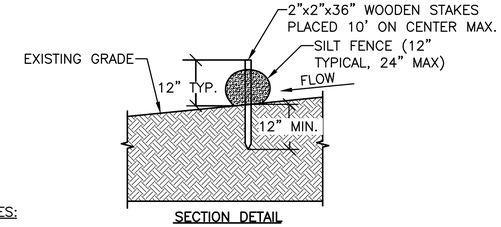

SECTION DETAIL

NOTES:

1. USE FILTREXX® SEDIMENT CONTROL SYSTEM BY FILTREXX® LAND IMPROVEMENT SYSTEMS OR APPROVED EQUAL. ONE SUCH APPROVED EQUAL IS MIRAFI ENVIROFENCE.
2. STAKES SHALL BE INSTALLED THROUGH THE MIDDLE OF THE SILT FENCE AT 10' INTERVALS MAXIMUM USING HARDWOOD STAKES.
3. SILT FENCE TO BE ALIGNED ALONG CONTOUR AS CLOSELY AS POSSIBLE.
4. BOTH ENDS OF EACH FENCE SECTION MUST EXTEND AT LEAST 10 FEET UP SLOPE AT 45 DEGREES TO THE MAIN FENCE ALIGNMENT.
5. SEDIMENT MUST BE REMOVED WHERE ACCUMULATIONS REACH 1/2 THE ABOVE GROUND HEIGHT OF THE FENCE.
6. ANY SILT FENCE SECTION WHICH HAS BEEN UNDERMINED OR TOPPED MUST BE IMMEDIATELY REPAIRED OR REPLACED AT NO ADDITIONAL COST TO THE OWNER
7. SILT FENCES SHALL BE INSTALLED AND MAINTAINED IN ACCORDANCE WITH THE STORM WATER POLLUTION PREVENTION PLAN (SWPPP).

STANDARD SYMBOL —— SF —— SF

SILT FENCE

NOT TO SCALE

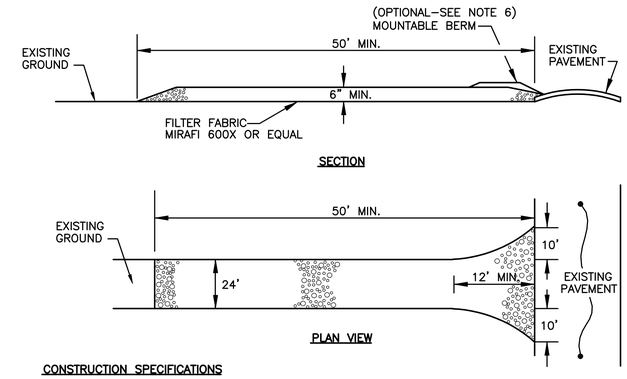

CONSTRUCTION SPECIFICATIONS

1. STONE SIZE – USE 2" STONE, OR RECLAIMED OR RECYCLED CONCRETE EQUIVALENT.
2. LENGTH – AS REQUIRED, BUT NOT LESS THAN 50 FEET
3. THICKNESS – NOT LESS THAN SIX (6) INCHES
4. WIDTH TWENTY–FOUR (24) FEET MINIMUM, BUT NOT LESS THAN THE FULL WIDTH AT POINTS WHERE EGRESS OCCURS.
5. FILTER FABRIC (MIRAFI 600X OR EQUAL) – SHALL BE PLACED OVER THE ENTIRE AREA PRIOR TO PLACING OF STONE.
6. SURFACE WATER – ALL SURFACE WATER FLOWING OR DIVERTED TOWARDS CONSTRUCTION ENTRANCES SHALL BE PIPED ACROSS THE ENTRANCE. IF PIPING IS NOT POSSIBLE, A MOUNTABLE BERM 3' WIDE (MIN.) WITH 5:1 SLOPES WILL BE PERMITTED.
7. MAINTENANCE – THE ENTRANCES SHALL BE MAINTAINED IN A CONDITION WHICH WILL PREVENT TRACKING OR FLOWING OF SEDIMENT ONTO PUBLIC RIGHTS–OF–WAY. THIS MAY REQUIRE PERIODIC TOP DRESSING WITH ADDITIONAL STONE AS CONDITIONS DEMAND AND REPAIR AND/OR CLEANOUT OF ANY MEASURES USED TO TRAP SEDIMENT. ALL SEDIMENT SPILLED, DROPPED, WASHED OR TRACKED ONTO PUBLIC RIGHTS–OF–WAY MUST BE REMOVED IMMEDIATELY.
8. WASHING – WHEELS SHALL BE CLEANED TO REMOVE SEDIMENT PRIOR TO ENTRANCE ONTO PUBLIC RIGHTS–OF–WAY. WHEN WASHING IS REQUIRED, IT SHALL BE DONE ON AN AREA STABILIZED WITH STONE AND WHICH DRAINS INTO ADJACENT SEDIMENT BASINS.
9. PERIODIC INSPECTION AND NEEDED MAINTENANCE SHALL BE PERFORMED IN ACCORDANCE WITH THE PROJECT STORM WATER POLLUTION PREVENTION PLAN.

STABILIZED CONSTRUCTION ENTRANCE DETAIL

NOT TO SCALE

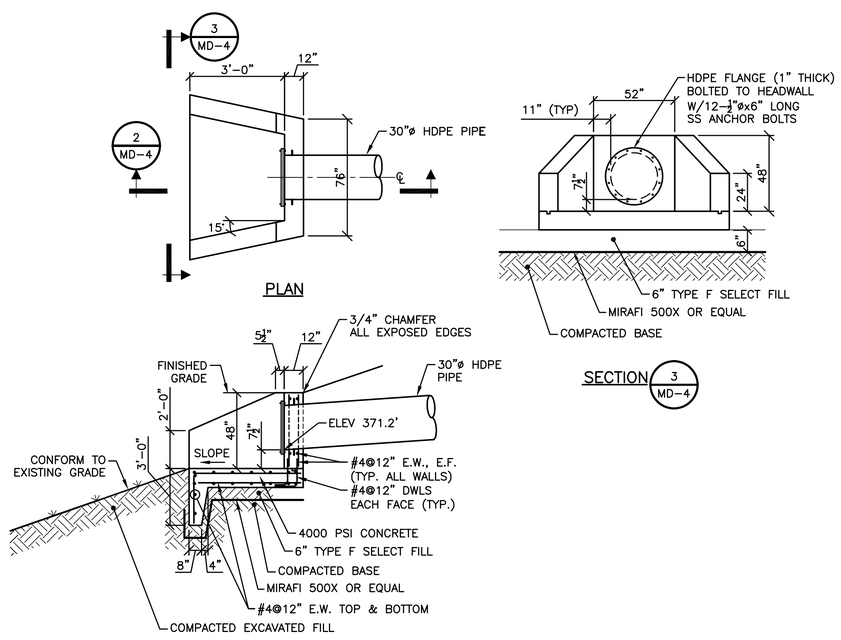

OUTFALL STRUCTURE DETAIL

NOT TO SCALE

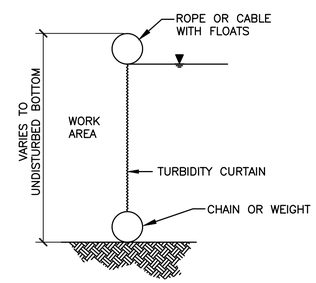

TURBIDITY CURTAIN DETAIL

NOT TO SCALE

DETAIL NOTES:

1. IF A PRE–MANUFACTURED PRODUCT IS USED, THE TURBIDITY CURTAIN SHALL BE INSTALLED PER THE MANUFACTURER'S WRITTEN INSTRUCTIONS, OVERLAPPING AND SECURING SIDE AND ENDS AS REQUIRED.
2. THE HEIGHT OF THE CURTAIN SHALL BE 20% GREATER THAN THE DEPTH OF THE WATER TO ALLOW FOR WATER LEVEL FLUCTUATIONS.
3. IF WATER DEPTH AT THE DESIGN ALIGNMENT IS MINIMAL, THE TOE CAN BE ANCHORED IN PLACE BY STAKING.

THIS DRAWING WAS PREPARED AT THE SCALE INDICATED IN THE TITLE BLOCK. INACCURACIES IN THE STATED SCALE MAY BE INTRODUCED WHEN DRAWINGS ARE REPRODUCED BY ANY MEANS. USE THE GRAPHIC SCALE BAR IN THE TITLE BLOCK TO DETERMINE THE ACTUAL SCALE OF THIS DRAWING.

IT IS A VIOLATION OF LAW FOR ANY PERSON, UNLESS ACTING UNDER THE DIRECTION OF A LICENSED ENGINEER, TO ALTER THIS DOCUMENT.

PRELIMINARY
NOT FOR
CONSTRUCTION

DATE: 5/12/10

NO.	DATE	REVISION	INIT.
B	5/12/10	DP #2 FOR NYSDEC AND COUNTY REVIEW	
A	4/09/10	DP #2 DRAFT FOR HONEYWELL REVIEW	

O'BRIEN & GERE ENGINEERS INC.

2010 © O'Brien and Gere Engineers, Inc.

HONEYWELL INTERNATIONAL, INC.
DP #2
WATER TREATMENT PLANT
TOWN OF CAMILLUS, NEW YORK

MISCELLANEOUS DETAILS

IN CHARGE OF M.E. REWKOWSKI
DESIGNED BY MER CHECKED BY RGD
DRAWN BY SLJ/DOK

FILE NO. 1163.45613–MD4
DATE MAY 2010

MD–4

I:\Honeywell.1163\45613.Sca–Wtp–Details\Docs\DWG\DP–2\Sheets\44523–MD4.dwg

May 11, 2010 – 6:51pm

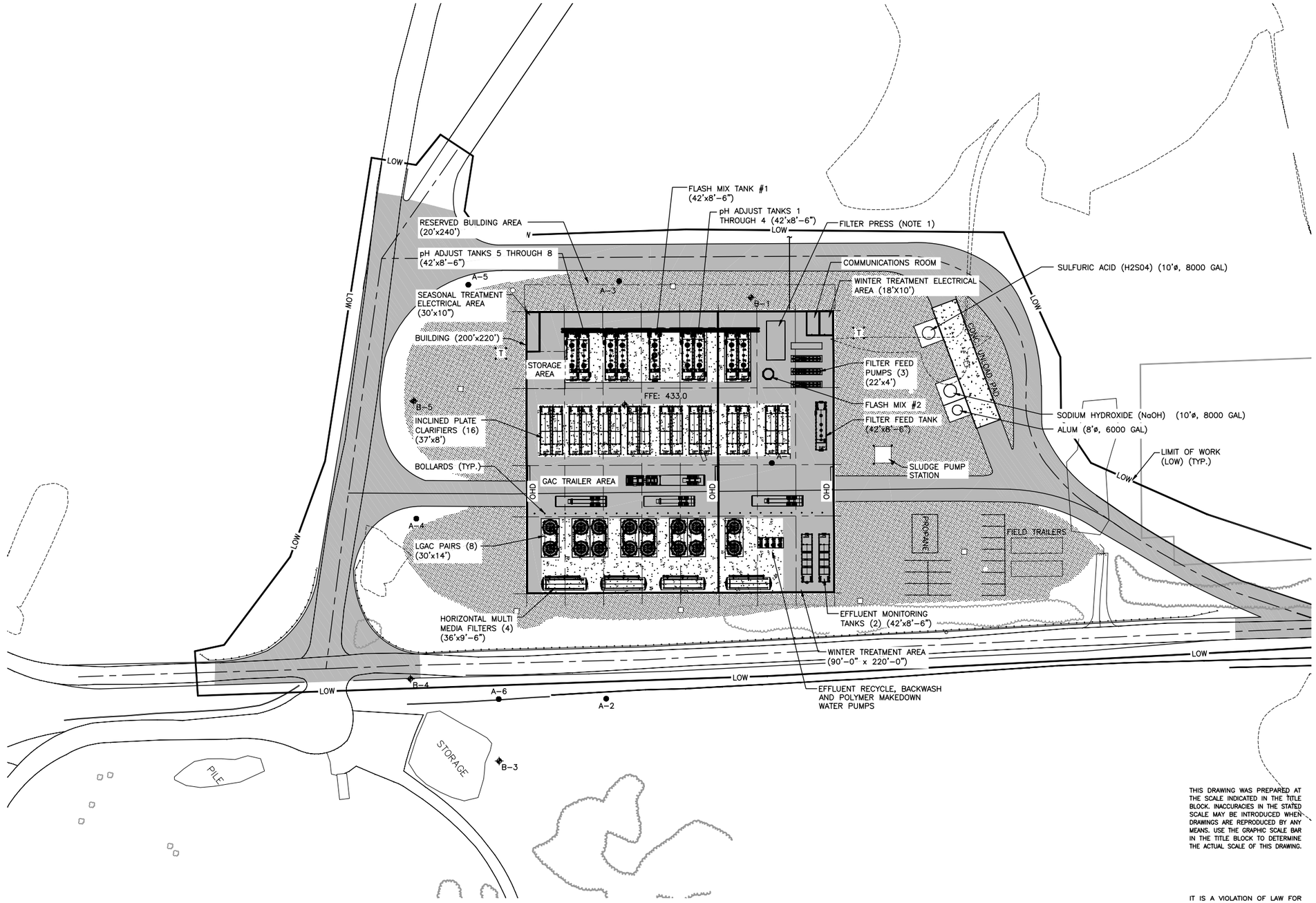

NOTES:

1. SPACE RESERVED FOR FILTER PRESS IF REQUIRED.

SITE PLAN

SCALE: 1"=40'

1"=40' 40 0 40 80

NO.	DATE	REVISION	INIT.
F	5/12/10	DP #2 FOR NYSDEC AND COUNTY REVIEW	
E	4/09/10	DP #2 DRAFT FOR HONEYWELL REVIEW	
D	3/24/10	REVISED BUILDING LAYOUT	
C	3/10/10	DP #1 FOR NYSDEC AND COUNTY REVIEW	
B	2/12/10	DP #1 DRAFT FOR HONEYWELL REVIEW	
A	2/4/10	DP #1 INTERNAL REVIEW	

THIS DRAWING WAS PREPARED AT THE SCALE INDICATED IN THE TITLE BLOCK. INACCURACIES IN THE STATED SCALE MAY BE INTRODUCED WHEN DRAWINGS ARE REPRODUCED BY ANY MEANS. USE THE GRAPHIC SCALE BAR IN THE TITLE BLOCK TO DETERMINE THE ACTUAL SCALE OF THIS DRAWING.

IT IS A VIOLATION OF LAW FOR ANY PERSON, UNLESS ACTING UNDER THE DIRECTION OF A LICENSED ENGINEER, TO ALTER THIS DOCUMENT.

PRELIMINARY NOT FOR CONSTRUCTION

DATE: 5/12/10

O'BRIEN & GERE ENGINEERS INC.

2010 © O'Brien and Gere Engineers, Inc.

HONEYWELL INTERNATIONAL, INC.
DP #2
WATER TREATMENT PLANT
TOWN OF CAMILLUS, NEW YORK

GENERAL
SITE CIVIL
GENERAL ARRANGEMENT

IN CHARGE OF JSR
DESIGNED BY GBE CHECKED BY PDS
DRAWN BY JAS

FILE NO. 1163.45613–GA1
DATE FEBRUARY 2010

GA–01

I:\Honeywell.1163\45613.Sca–Wtp–Details\Docs\DWG\DP–2\Sheets\44523–GA1.dwg

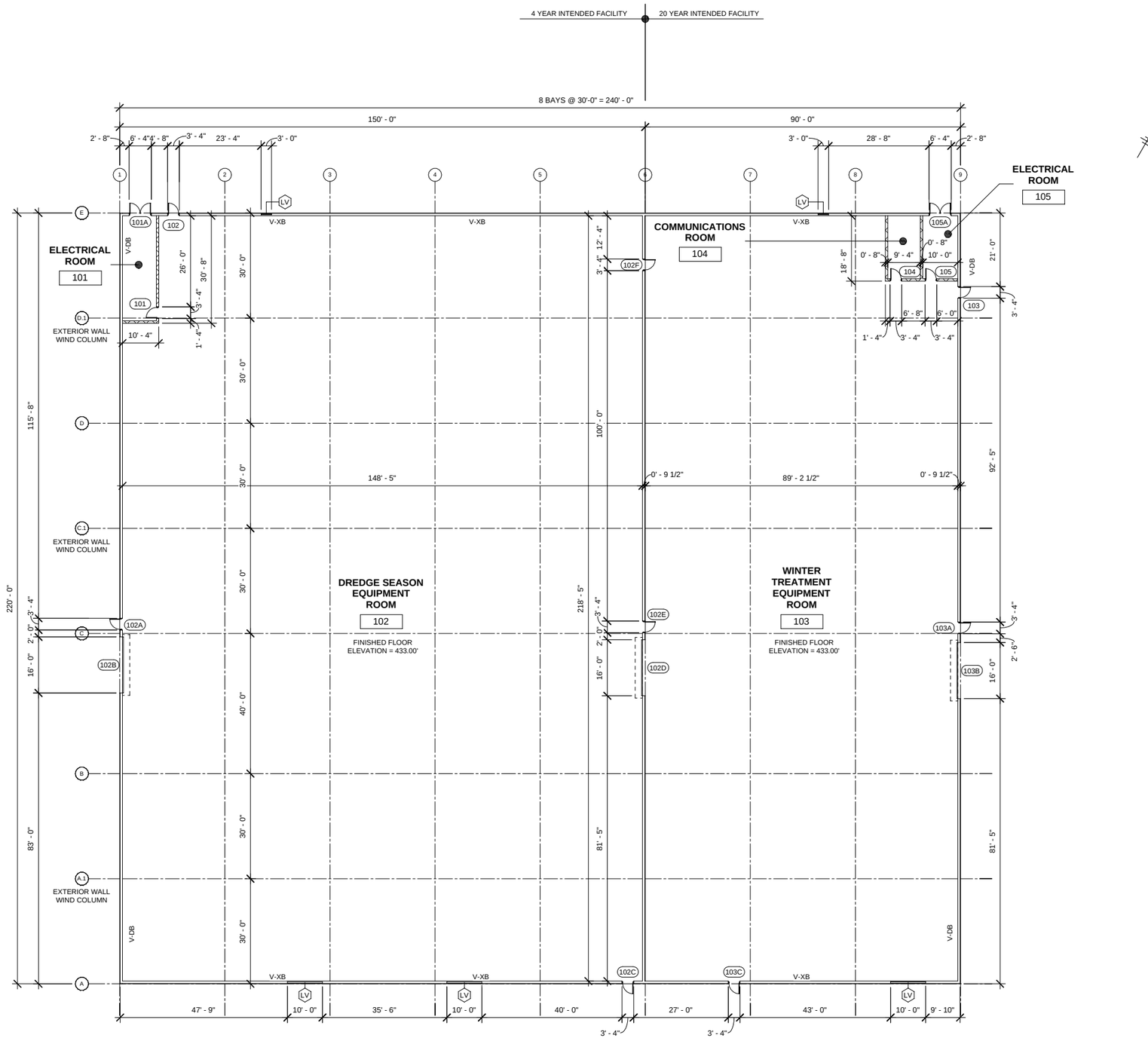

1 FLOOR PLAN
1/16" = 1'-0"

1/16"=1'-0" 16 8 0 16 32

PLAN NOTES:

1. V-XB = VERTICAL CROSS BRACING
2. V-DB = VERTICAL DIAGONAL BRACE

IT IS A VIOLATION OF LAW FOR ANY PERSON, UNLESS ACTING UNDER THE DIRECTION OF A LICENSED ENGINEER, TO ALTER THIS DOCUMENT.

PRELIMINARY NOT FOR CONSTRUCTION

DATE: 05/12/2010

NO.	DATE	REVISION	INT.
A	4/09/10	DP #2 DRAFT FOR HONEYWELL REVIEW	
B	5/12/10	DP #2 FOR NYSDEC AND COUNTY REVIEW	

O'BRIEN & GERE

2010 © O'BRIEN & GERE

HONEYWELL INTERNATIONAL INC.
DP #2
WATER TREATMENT PLANT
TOWN OF CAMILLUS, NEW YORK

ARCHITECTURAL

FLOOR PLAN

IN CHARGE OF NJD
DESIGNED BY NJD CHECKED BY NJD
DRAWN BY KRM

FILE NO. **1163. 45613. A-1**
DATE **MAY 2010**

A-1

SAVED: 5/12/2010 12:43:37 PM

FILE NAME: I:\Honeywell.1163\45613.Sca-Wtp-Detailed\Docs\DWG\DP-2\Revit\45613 - WTP.rvt

SAVED: 5/12/2010 12:43:38 PM

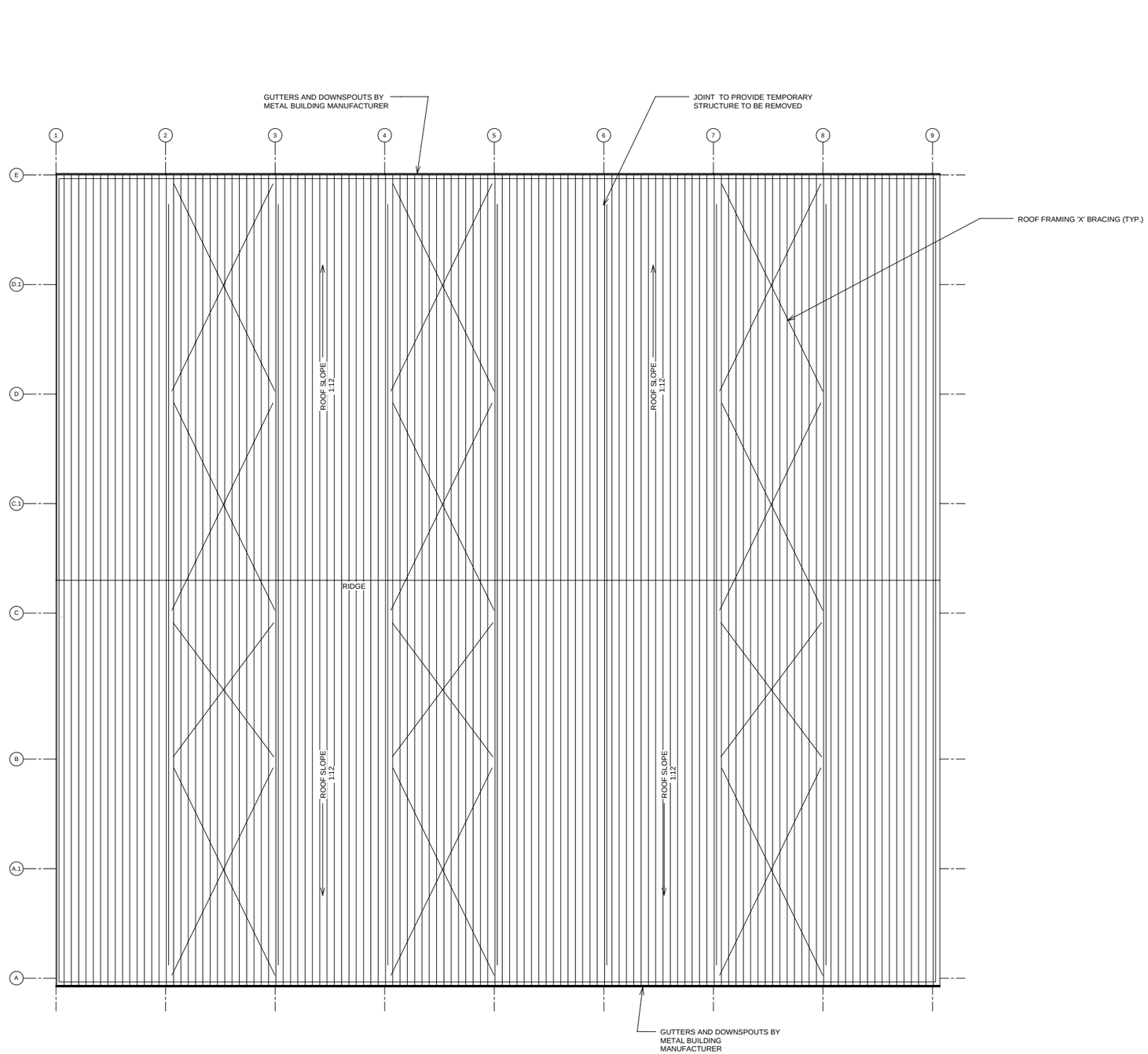

1 ROOF PLAN
1/16" = 1'-0"

1/16"=1'-0" 16 8 0 16 32

IT IS A VIOLATION OF LAW FOR ANY PERSON, UNLESS ACTING UNDER THE DIRECTION OF A LICENSED ENGINEER, TO ALTER THIS DOCUMENT.

PRELIMINARY NOT FOR CONSTRUCTION

DATE: **5/12/10**

NO.	DATE	REVISION	INT.
A	4/09/10	DP #2 DRAFT FOR HONEYWELL REVIEW	
B	5/12/10	DP #2 FOR NYSDEC AND COUNTY REVIEW	

O'BRIEN & GERE

2010 © O'BRIEN & GERE

HONEYWELL INTERNATIONAL INC.
DP #2
WATER TREATMENT PLANT
TOWN OF CAMILLUS, NEW YORK

ARCHITECTURAL

ROOF PLAN

IN CHARGE OF NJD
DESIGNED BY NJD CHECKED BY NJD
DRAWN BY KRM

FILE NO. **1163. 45613. A-2**
DATE **MAY 2010**

A-2

FILE NAME: I:\Honeywell.1163\45613.Sca-Wtp-Detaile\Docs\DWG\DP-2\Revit\45613 - WTP.rvt

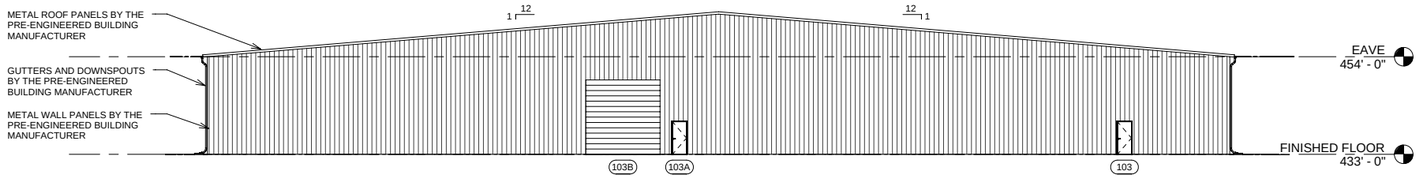

1 EAST ELEVATION
1/16" = 1'-0"

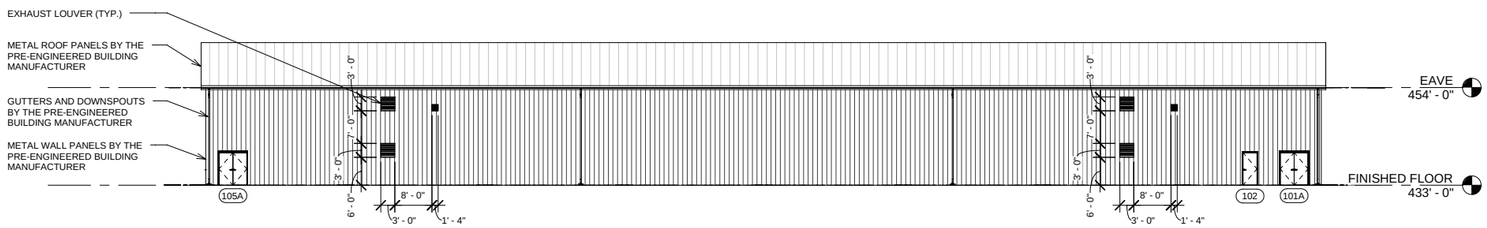

2 NORTH ELEVATION
1/16" = 1'-0"

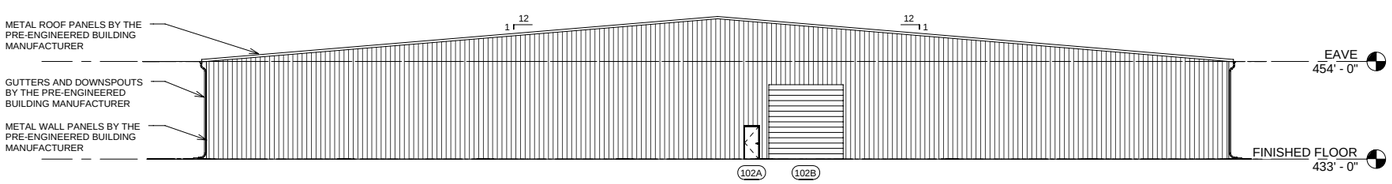

4 WEST ELEVATION
1/16" = 1'-0"

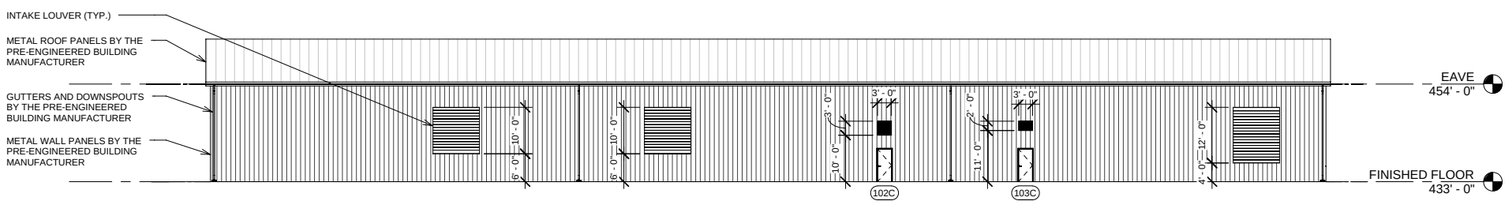

3 SOUTH ELEVATION
1/16" = 1'-0"

1/16"=1'-0" 16 8 0 16 32

IT IS A VIOLATION OF LAW FOR ANY PERSON, UNLESS ACTING UNDER THE DIRECTION OF A LICENSED ENGINEER, TO ALTER THIS DOCUMENT.

PRELIMINARY NOT FOR CONSTRUCTION

DATE: 5/12/10

NO.	DATE	REVISION	INT.
A	4/09/10	DP #2 DRAFT FOR HONEYWELL REVIEW	
B	5/12/10	DP #2 FOR NYSDEC AND COUNTY REVIEW	

O'BRIEN & GERE

2010 © O'BRIEN & GERE

HONEYWELL INTERNATIONAL INC.
DP #2
WATER TREATMENT PLANT
TOWN OF CAMILLUS, NEW YORK

ARCHITECTURAL

ELEVATIONS

IN CHARGE OF NJD
DESIGNED BY NJD CHECKED BY NJD
DRAWN BY KRM

FILE NO. **1163. 45613. A-3**
DATE **MAY 2010**

A-3

SAVED: 5/12/2010 12:43:39 PM

FILE NAME: I:\Honeywell.1163\45613.Sca\Wtp-Detail\Docs\DWG\DP-2Revit\45613 - WTP.rvt

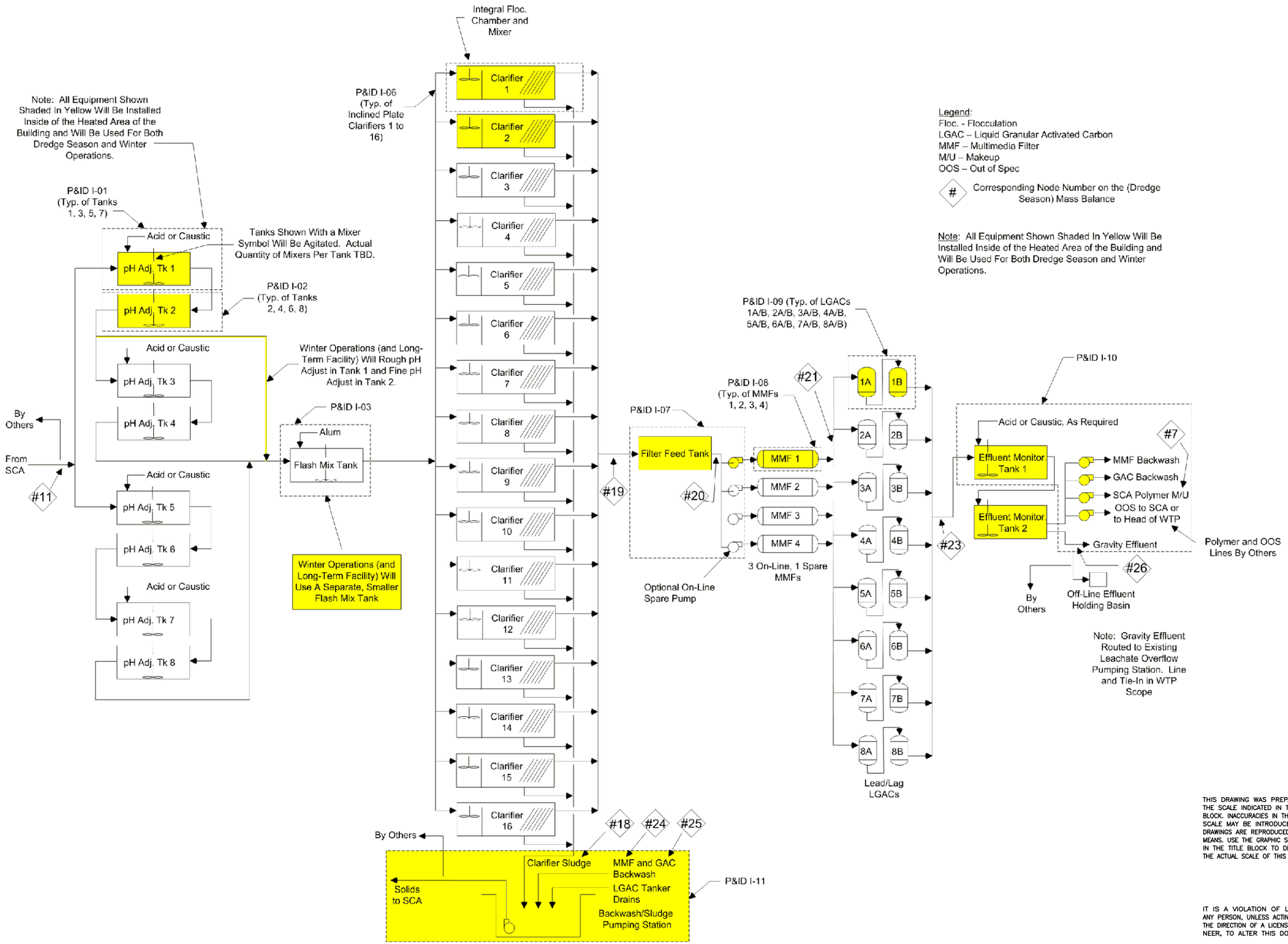

NO.	DATE	REVISION	INIT.
E	5/12/10	DP #2 FOR NYSDEC AND COUNTY REVIEW	
D	4/09/10	DP #2 DRAFT FOR HONEYWELL REVIEW	
C	3/25/10	DP #1 FOR GAC BIDDING	
B	3/10/10	DP #1 ISSUED FOR NYSDEC AND COUNTY REVIEW	
A	2/12/10	DP #1 DRAFT FOR HONEYWELL REVIEW	

NOT TO SCALE

THIS DRAWING WAS PREPARED AT THE SCALE INDICATED IN THE TITLE BLOCK. INACCURACIES IN THE STATED SCALE MAY BE INTRODUCED WHEN DRAWINGS ARE REPRODUCED BY ANY MEANS. USE THE GRAPHIC SCALE BAR IN THE TITLE BLOCK TO DETERMINE THE ACTUAL SCALE OF THIS DRAWING.

IT IS A VIOLATION OF LAW FOR ANY PERSON, UNLESS ACTING UNDER THE DIRECTION OF A LICENSED ENGINEER, TO ALTER THIS DOCUMENT.

O'BRIEN & GERE ENGINEERS INC.

2010 © O'Brien and Gere Engineers, Inc.

HONEYWELL INTERNATIONAL, INC.
DP #1
WATER TREATMENT PLANT
TOWN OF CAMILLUS, NEW YORK

MECHANICAL

PROCESS FLOW DIAGRAM

PRELIMINARY NOT FOR CONSTRUCTION
DATE: 5/12/10

IN CHARGE OF JSR
DESIGNED BY GBE CHECKED BY PDS
DRAWN BY LMW

FILE NO. 1163.44523–PFD1
DATE FEBRUARY 2010

PFD–1

May 11, 2010 – 7:02pm
I:\Honeywell.1163\45613.Sco–Wtp–Details\Docs\DWG\DP–2\Sheets\45613–PFD1.dwg
I:\1163\44523\4\Detailed Design Shared PFD Mar 22 10.vsd

Draft

Honeywell SCA WTP
Mass Balance Maximum Flow - Based on Phase II Pre-Design Investigation Report - Pre Holding at Peak Flows
Review Rev. 10
3/26/2010

PARAMETER	Primary Screen Underflow		Combined Recirculation to Geotubes		Recirculation Solids Contribution to Geotubes		Non-Recirc. Liquid Stream to EQ Basin leaving Geotubes		Recirculation Liquid to EQ Basin leaving Geotubes		Total Liquid to EQ Basin		Parson Polymer Makeup		Rain Water to EQ Basin		Internal Reuse from EQ		Accumulation in EQ Basin		pH Adj Tank Influent		H2SO4 Add to pH Adj Tk		NaOH Add to pH Adj Tk		Alum Add'n to Floc	
Line Number	1		2		3		4		5		6		7		8		9		10		11		12		13		14	
Column Designation	Concent.	lb/hr	Concent.	lb/hr	Concent.	lb/hr	Concent.	lb/hr	Concent.	lb/hr	Concent.	lb/hr	Concent.	lb/hr	Concent.	lb/hr	Concent.	lb/hr			Concent.	lb/hr	Concent.	lb/hr	Concent.	lb/hr	Concent.	lb/hr
GENERAL																												
Flow Rate	---	2,574,058	---	583,526	---	692	---	2,306,841	---	582,834	---	2,889,675	---	87,049	---	70,539	---	51,029	---	76,043	---	2,833,143	---	991.6	---	0.000	---	56.7
Flow Rate (GPM)	---	5,145	---	1,166	---	1.4	---	4,611	---	1,165	---	5,776.1	---	174.0	---	141.0	---	102	---	152	---	5,663	---	1.08	---	0.000	---	0.092
Flow Rate (MGD)	---	7.41	---	1.68	---	0.002	---	6.64	---	1.678	---	8.3	---	0.251	---	0.203	---	0.15	---	0.22	---	8.15	---	0.002	---	0.000	---	0.000
Temp (deg F)	---	Ambient	---	Ambient	---	Ambient	---	Ambient	---	Ambient	---	Ambient	---	Ambient	---	Ambient	---	Ambient	---	Ambient	---	Ambient	---	Ambient	---	Ambient	---	Ambient
Specific Gravity	---	1.00	---	1.00	---	1.00	---	1.00	---	1.00	---	1.00	---	1.00	---	1.00	---	1.00	---	1.00	---	1.00	---	1.84	---	1.55	---	1.25
Design pH (S.U.)	11.5 - 12.0	---	9.0 - 10.0	---	6.5 - 7.5	---	11.5 - 12.0	---	9.0 - 10.0	---	10.0 - 11.5	---	9.0 - 10.0	---	6.5 - 7.5	---	9.0 - 10.0	---	9.0 - 10.0	---	9.0 - 10.0	---	< 1	---	> 13	---	---	---
CATIONS / ANIONS (mg/L)																												
Aluminum	---	---	8.49	4.96	3,605.8	2.50	4.900	11.312	4.222	2.462	4.763	13.77	4.217	0.367	0.0	0.0	4.650	0.24	4.650	0.35	4.774	13.54	0.0	0.0	0.0	0.0	19,930	0.9
Cadmium	---	---	0.005	0.003	0.0	0.000	0.005	0.012	0.005	0.003	0.005	0.014	0.005	0.000	0.0	0.0	0.005	0.000	0.005	0.000	0.005	0.01	0.0	0.0	0.0	0.0	0.0	0.0
Chlorides	---	---	1,193	696.9	0.0	0.000	1,190	2,747	1,195	697	1,191	3,444	1,193	104	0.0	0.0	1,163	59.4	1,163	88.5	1,194	3,385	0.0	0.0	0.0	0.0	0.0	0.0
Chromium	---	---	0.1	0.040	53.9	0.037	0.020	0.046	0.004	0.003	0.017	0.049	0.004	0.000	0.0	0.0	0.016	0.001	0.016	0.001	0.017	0.05	0.0	0.0	0.0	0.0	0.0	0.0
Hex Chromium	---	---	0.005	0.003	0.0	0.000	0.005	0.012	0.005	0.003	0.005	0.014	0.005	0.000	0.0	0.0	0.005	0.000	0.005	0.000	0.005	0.01	0.0	0.0	0.0	0.0	0.0	0.0
Copper	---	---	0.892	0.521	663.6	0.459	0.240	0.554	0.105	0.061	0.213	0.616	0.037	0.003	0.0	0.0	0.208	0.011	0.208	0.016	0.213	0.60	0.0	0.0	0.0	0.0	0.0	0.0
Lead	---	---	0.203	0.119	143.3	0.099	0.070	0.162	0.033	0.019	0.063	0.181	0.026	0.002	0.0	0.0	0.061	0.003	0.061	0.005	0.063	0.18	0.0	0.0	0.0	0.0	0.0	0.0
Mercury	---	---	0.005	0.024	35.1	0.024	0.011	0.025	0.000	0.000	0.009	0.026	0.000	0.000	0.0	0.0	0.009	0.000	0.009	0.001	0.009	0.03	0.0	0.0	0.0	0.0	0.0	0.0
Nickel	---	---	2.399	1.401	1941.4	1.344	0.670	1.547	0.098	0.057	0.555	1.604	0.078	0.007	0.0	0.0	0.541	0.028	0.541	0.041	0.556	1.58	0.0	0.0	0.0	0.0	0.0	0.0
Silver	---	---	0.005	0.003	0.0	0.000	0.005	0.012	0.005	0.003	0.005	0.014	0.005	0.000	0.0	0.0	0.005	0.000	0.005	0.000	0.005	0.01	0.0	0.0	0.0	0.0	0.0	0.0
Sulfate	---	---	551.1	321.9	0.0	0.00	150.0	346.3	551.8	321.9	231.0	668.2	551.1	48.01	0.0	0.0	225.5	11.52	225.5	17.16	231.6	656.6	1,674,971	903.4	0.0	0.0	70,864	3.3
Zinc	---	---	0.362	0.212	294.6	0.204	0.098	0.226	0.013	0.008	0.081	0.234	0.008	0.001	0.0	0.0	0.079	0.004	0.079	0.01	0.081	0.23	0.0	0.0	0.0	0.0	0.0	0.0
Total Tracked Cations / Anions	---	---	1,760.7	1028.2	7,699.3	5.3	1,348.7	3,113.7	1,753.6	1022.9	1,430.4	4,136.6	1,751.3	152.6	0.0	0.0	1,396.3	71.3	1,396.3	106.3	1,433.8	4,065.3	1,674,971	903.4	0.0	0.0	90,794	4.2
VOC (ug/L)																												
TIO	---	---	15.5	9.1	0.0	0.0	28.0	64.6	15.5	9.1	25.5	73.7	0.026	0.002	0.0	0.0	24.9	1.27	24.88	1.89	25.5	72.4	0.0	0.0	0.0	0.0	0.0	0.0
TOTAL ORGANICS	---	---	15.5	9.1	0.0	0.0	28.0	64.6	15.5	9.1	25.5	73.7	0.026	0.002	0.0	0.0	24.9	1.27	24.88	1.89	25.5	72.4	0.0	0.0	0.0	0.0	0.0	0.0
OTHER																												
TBOD5 (mg/L)	---	---	334.1	195.1	142,197	98.4	170.0	392.5	165.7	96.7	169.1	489.1	131.8	11.5	0.0	0.0	165.1	8.43	165.11	12.57	169.5	480.7	0.0	0.0	0.0	0.0	0.0	0.0
TSS (mg/L)	---	---	990	578.3	666,147	461.2	200.0	461.7	200.0	116.7	200	578.4	2.0	0.2	0.0	0.0	195.2	9.97	195.23	14.86	200.5	568.4	0.0	0.0	0.0	0.0	0.0	0.0
TP (mg/L)	---	---	1.0	0.6	0.0	0.0	0.7	1.7	1.0	0.6	0.8	2.2	0.8	0.1	0.0	0.0	0.8	0.04	0.76	0.06	0.8	2.2	0.0	0.0	0.0	0.0	0.0	0.0
TKN (mg/L)	---	---	61.5	35.9	0.0	0.0	47.0	108.5	61.5	35.9	49.93	144.4	48.9	4.3	0.0	0.0	48.7	2.49	48.74	3.71	50.0	141.9	0.0	0.0	0.0	0.0	0.0	0.0

PARAMETER	Polymer Add'n to Floc		Polymer Makeup Water		I.P. Clarifier Influent		I.P. Clarifier Sludge		I.P. Clarifier Effluent		Filter Feed Tank Disch		MMF Effluent		GAC Units		GAC Effluent		Spent MMF B/Wash		Spent GAC B/Wash		Eff. Tanks Discharge		PERMIT LIMIT
Line Number	15		16		17		18		19		20		21		22		23		24		25		26		
Column Designation	Concent.	lb/hr	Concent.	lb/hr	Concent.	lb/hr	Concent.	lb/hr	Concent.	lb/hr	Concent.	lb/hr	Concent.	lb/hr			Concent.	lb/hr	Concent.	lb/hr	Concent.	lb/hr	Concent.	lb/hr	
GENERAL																									
Flow Rate	---	1.42	---	1,152	---	2,835,345	---	354,418	---	2,480,927	---	2,480,927	---	2,480,927	---	---	---	2,480,927	---	83,172	---	58,887	---	2,250,667	NA
Flow Rate (GPM)	---	0.003	---	2.303	---	5,668	---	708.4	---	4,959	---	4,959	---	4,959	---	---	---	4,959	---	166.3	---	117.7	---	4,499	
Flow Rate (MGD)	---	0.000	---	0.003	---	8.16	---	1.020	---	7.14	---	7.14	---	7.14	---	---	---	7.14	---	0.239	---	0.170	---	6.5	
Temp (deg F)	---	Ambient	---	Ambient	---	Ambient	---	Ambient	---	Ambient	---	Ambient	---	Ambient	---	Ambient	---	Ambient	---	Ambient	---	Ambient	---	Ambient	< 150
Specific Gravity	---	1.00	---	1.00	---	1.00	---	1.00	---	1.00	---	1.00	---	1.00	---	---	---	1.00	---	1.00	---	1.00	---	1.00	
Design pH (S.U.)	6.5 - 7.5	---	9.0 - 10.0	---	8.5-10.5	---	8.5-10.5	---	8.5	---	8.5	---	8.5	---	---	---	9.0 - 10.0	---	8.5	---	9.0 - 10.0	---	9.0 - 10.0	---	5.5-10.5
CATIONS / ANIONS (mg/L)																									
Aluminum	0.0	0.0	4.217	0.005	5.096	14.461	11.254	3.992	4.217	10.469	4.217	10.469	4.217	10.469			4.217	10.469	4.217	0.351	4.2	0.248	4.2	9.5	---
Cadmium	0.0	0.0	0.005	0.000	0.005	0.014	0.005	0.002	0.005	0.012	0.005	0.012	0.005	0.012	---	0.000	0.005	0.012	0.005	0.000	0.005	0.000	0.005	0.011	2.0
Chlorides	0.0	0.0	1,193.3	1.376	1,193.3	3,386.2	1,193.34	423.3	1,193.34	2,962.90	1,193.34	2,962.90	1,193.34	2,962.9	---	0.000	1,193.3	2962.9	1,193.3	99.33	1,193	70.3	1,193	2,688	---
Chromium	0.0	0.0	0.004	0.000	0.017	0.048	0.10	0.035	0.005	0.013	0.005	0.013	0.005	0.013	---	0.000	0.004	0.009	0.004	0.000	0.068	0.004	0.004	0.008	0.3
Hex Chromium	0.0	0.0	0.005	0.000	0.005	0.014	0.005	0.002	0.005	0.012	0.005	0.012	0.005	0.012	---	0.000	0.005	0.012	0.005	0.000	0.005	0.000	0.005	0.011	4.0
Copper	0.0	0.0	0.037	0.000	0.213	0.605	0.661	0.234	0.149	0.371	0.149	0.371	0.149	0.371	---	0.000	0.037	0.093	0.037	0.003	4.8	0.280	0.037	0.084	0.7
Lead	0.0	0.0	0.026	0.000	0.063	0.178	0.238	0.085	0.038	0.093	0.038	0.093	0.038	0.093	---	0.000	0.026	0.065	0.026	0.002	0.502	0.030	0.026	0.059	0.2
Mercury	0.0	0.0	0.000	0.000	0.009	0.025	0.069	0.024	2.651E-04	6.582E-04	2.65E-04	6.58E-04	2.65E-04	6.58E-04	---	0.00039	1.06E-04	2.63E-04	1.06E-04	8.83E-06	1.06E-04	6.25E-06	0.00011	0.00024	0.0002
Nickel	0.0	0.0	0.078	0.000	0.556	1.576	3.667	1.301	0.111	0.276	0.111	0.276	0.111	0.276	---	0.000	0.078	0.193	0.078	0.006	1.48	0.087	0.08	0.18	0.35
Silver	0.0	0.0	0.005	0.000	0.005	0.014	0.005	0.002	0.005	0.012	0.005	0.012	0.005	0.012	---	0.000	0.005	0.012	0.005	0.000	0.005	0.000	0.005	0.011	1.0
Sulfate	0.0	0.0	551.1	0.636	551.1	1563.9	551.1	195.5	551.1	1368.4	551.1	1368.4	551.1	1368.4	---	0.000	551.1	1368.4	551.1	45.9	551	32.5	551	1241	---
Zinc	0.0	0.0	0.008	0.000	0.081	0.230	0.535	0.190	0.016	0.040	0.016	0.040	0.016	0.040	---	0.000	0.008	0.020	0.008	0.001	0.349	0.021	0.008	0.018	0.4
Total Tracked Cations / Anions	0.0	0.0	1,751.3	2.0	1,753.2	4,974.9	1,763.7	625.6	1,751.7	4,349.3	1,751.7	4,349.3	1,751.7	4,349.3	---	0.000	1,751.3	4,348.2	1,751.3	145.8	1,770	104	1,751	3,945	---
VOC (ug/L)																									
TIO	0.0	0.0	0.026	0.002	25.5	72.4	25.5	9.1	25.5	63.38	25.5	63.4	25.5	63.4	---	63.3	0.026	0.063	0.026	0.002	0.026	0.002	0.026	0.057	0.1
TOTAL ORGANICS	0.0	0.0	0.026	0.002	25.5	72.4	25.5	9.1	25.5	63.38	25.5	63.4	25.5	63.4	---	63.3	0.026	0.063	0.026	0.002	0.026	0.002	0.026	0.057	---
OTHER																									
TBOD5 (mg/L)	0.0	0.0	131.8	11.5	173	492.2	416	147.7	138.8	344.5	138.8	344.5	138.8	344.5	---	0.0	131.8	327.3	131.8	11.0	424.1	25.0	132	297	NA
TSS (mg/L)	0.0	0.0	2.0	0.2	205	582.8	1571	557.3	10.3	25.5	10.3	25.5	5.0	12.4	---	0.0	2.0	5.0	159.2	13.2	128.4	7.6	2.0	4.5	NA
TP (mg/L)	0.0	0.0	0.8	0.07	0.8	2.3	0.8	0.3	0.8	2.0	0.8	2.0	0.8	2.0	---	0.0	0.8	1.9	0.76	0.06	2.4	0.1	0.76	1.7	NA
TKN (mg/L)	0.0	0.0	48.9	4.3	51.5	146.2	51.5	18.3	51.5	127.9	51.5	127.9	51.5	127.9	---	0.0	48.9	121.5	48.9	4.1	157.4	9.3	49	110	NA

Notes:
1. Cadmium, hexavalent chromium and silver were non-detect.
2. Molybdenum data and estimates are provided for informational purposes. A draft permit limit has not been established. Pre-Design Investigation (PDI) 6 will provide additional information regarding molybdenum.
3. The Geotube effluent TSS maximum anticipated value is 200 mg/L.
4. Sludge underflow from the I.P. Clarifier is 12.5% by influent volume.
5. Backwash design frequencies are: 1 time per day for each MMF unit, and 1 time per two-day period for each GAC unit.
6. Nickel removal is anticipated to occur at a pH of 10.5 S.U.
7. Parson's Mass Balance and O'Brien & Gere's Mass Balance correspond as follows: Parson's Node # 4 is equivalent to O'Brien & Gere's Node #16. Parsons Node #9 is equivalent to the sum of O'Brien & Gere Nodes # 18, 24 & 25. Parson's Node # 10 is equivalent to O'Brien & Gere's Node #9. Refer to Parsons' Mass Balance, Rev. A, 1/20/10.
8. O'Brien & Gere's in scope work for the SCA Water Treatment System begins at Node #11, the pH Adjust Tank Influent. Nodes #1 through #10 are presented for calculation purposes only, and are being addressed by Parsons.
9. Polymer is not planned to be used at the WTP. If required, usage would be as shown in Node #15.

IT IS A VIOLATION OF LAW FOR ANY PERSON, UNLESS ACTING UNDER THE DIRECTION OF A LICENSED ENGINEER, TO ALTER THIS DOCUMENT.

THIS DRAWING WAS PREPARED AT THE SCALE INDICATED IN THE TITLE BLOCK. INACCURACIES IN THE STATED SCALE MAY BE INTRODUCED WHEN DRAWINGS ARE REPRODUCED BY ANY MEANS. USE THE GRAPHIC SCALE BAR IN THE TITLE BLOCK TO DETERMINE THE ACTUAL SCALE OF THIS DRAWING.

PRELIMINARY NOT FOR CONSTRUCTION
DATE: 5/12/10

NO.	DATE	REVISION	INIT.
E	5/12/10	DP #2 FOR NYSDEC AND COUNTY REVIEW	
C	4/09/10	DP #2 DRAFT FOR HONEYWELL REVIEW	
B	3/10/10	DP #1 ISSUED FOR NYSDEC AND COUNTY REVIEW	
A	2/12/10	DP #1 DRAFT FOR HONEYWELL REVIEW	

NOT TO SCALE

O'BRIEN & GERE ENGINEERS INC.

2010 © O'Brien and Gere Engineers, Inc.

HONEYWELL INTERNATIONAL, INC.
DP #2
WATER TREATMENT PLANT
TOWN OF CAMILLUS, NEW YORK

MECHANICAL

MASS BALANCE – DREDGE SEASON

IN CHARGE OF JSR
DESIGNED BY GBE CHECKED BY PDS
DRAWN BY LMW
FILE NO. 1163.45613-PFD2
DATE FEBRUARY 2010
PFD-2

May 11, 2010 – 7:03pm
I:\Honeywell.1163\45613.Sca-Wtp-Detail\Docs\DWG\DP-2\Sheets\45613-PFD2.dwg

May 11, 2010 – 7:04pm

Honeywell SCA WTP
Winter Conditions
Mass Balance Maximum Flow - Based on Phase II Pre-Design Investigation Report - Pre Holding at Peak Flows
Review Rev. 10
5/26/2010

Draft

PARAMETER	Primary Screen Underflow		Combined Recirculation to Geotubes		Recirculation Solids Contribution to Geotubes		Non-Recirc. Liquid Stream to EQ Basin leaving Geotubes		Recirculation Liquid to EQ Basin leaving Geotubes		Total Liquid to EQ Basin		Parson Polymer Makeup		Rain Water to EQ Basin		Internal Reuse from EQ		Accumulation in EQ Basin		pH Adj Tank Influent		H2SO4 Add to pH Adj Tk		NaOH Add to pH Adj Tk		Alum Add'n to Floc	
Line Number	1		2		3		4		5		6		7		8		9		10		11		12		13		14	
Column Designation	Concent.	lb/hr	Concent.	lb/hr	Concent.	lb/hr	Concent.	lb/hr	Concent.	lb/hr	Concent.	lb/hr	Concent.	lb/hr	Concent.	lb/hr	Concent.	lb/hr			Concent.	lb/hr	Concent.	lb/hr	Concent.	lb/hr	Concent.	lb/hr
GENERAL																												
Flow Rate	---	130,604	---	49,041	---	40	---	130,573	---	49,001	---	179,574	---	0	---	70,539	---	0	---	0	---	250,113	---	87.5	---	0.000	---	5.0
Flow Rate (GPM)	---	261	---	98	---	0.1	---	261	---	98	---	358.9	---	0.0	---	141.0	---	0	---	0	---	500	---	0.10	---	0.000	---	0.008
Flow Rate (MGD)	---	0.38	---	0.14	---	0.000	---	0.38	---	0.141	---	0.5	---	0.000	---	0.203	---	0.00	---	0.00	---	0.72	---	0.000	---	0.000	---	0.000
Temp (deg F)	---	Ambient	---	Ambient	---	Ambient	---	Ambient	---	Ambient	---	Ambient	---	Ambient	---	Ambient	---	Ambient	---	Ambient	---	Ambient	---	Ambient	---	Ambient	---	Ambient
Specific Gravity	---	1.00	---	1.00	---	1.00	---	1.00	---	1.00	---	1.00	---	1.00	---	1.00	---	1.00	---	1.00	---	1.00	---	1.84	---	1.53	---	1.23
Design pH (S.U.)	11.5 - 12.0	---	9.0 - 10.0	---	6.5 - 7.5	---	11.5 - 12.0	---	9.0 - 10.0	---	10.0 - 11.5	---	9.0 - 10.0	---	6.5 - 7.5	---	9.0 - 10.0	---	9.0 - 10.0	---	9.0 - 10.0	---	< 1	---	> 13	---	---	---
CATIONS / ANIONS (mg/L)																												
Aluminum	---	---	6.33	0.31	4,402.7	0.18	4.900	0.640	2.701	0.132	4.300	0.77	2.699	0.000	0.0	0.0	3.087	0.00	3.087	0.00	3.087	0.77	0.0	0.0	0.0	0.0	19,930	0.1
Cadmium	---	---	0.003	0.000	0.0	0.000	0.005	0.001	0.003	0.000	0.005	0.001	0.003	0.000	0.0	0.0	0.003	0.000	0.003	0.000	0.003	0.00	0.0	0.0	0.0	0.0	0.0	0.0
Chlorides	---	---	772	37.9	0.0	0.000	1,190	156	773	38	1,076	193	772	0	0.0	0.0	773	0.0	773	0.0	773	193	0.0	0.0	0.0	0.0	0.0	0.0
Chromium	---	---	0.0	0.002	53.1	0.002	0.020	0.003	0.003	0.000	0.015	0.003	0.002	0.000	0.0	0.0	0.011	0.000	0.011	0.000	0.011	0.00	0.0	0.0	0.0	0.0	0.0	0.0
Hex Chromium	---	---	0.005	0.000	0.0	0.000	0.005	0.001	0.003	0.000	0.005	0.001	0.003	0.000	0.0	0.0	0.003	0.000	0.003	0.000	0.003	0.00	0.0	0.0	0.0	0.0	0.0	0.0
Copper	---	---	0.610	0.030	654.1	0.026	0.240	0.031	0.071	0.003	0.194	0.035	0.024	0.000	0.0	0.0	0.139	0.000	0.139	0.000	0.139	0.03	0.0	0.0	0.0	0.0	0.0	0.0
Lead	---	---	0.138	0.007	140.8	0.006	0.070	0.009	0.022	0.001	0.057	0.010	0.017	0.000	0.0	0.0	0.041	0.000	0.041	0.000	0.041	0.01	0.0	0.0	0.0	0.0	0.0	0.0
Mercury	---	---	0.005	0.001	34.6	0.001	0.011	0.001	0.000	0.000	0.008	0.001	0.000	0.000	0.0	0.0	0.006	0.000	0.006	0.000	0.006	0.00	0.0	0.0	0.0	0.0	0.0	0.0
Nickel	---	---	1.640	0.081	1911.8	0.077	0.670	0.088	0.065	0.003	0.505	0.091	0.051	0.000	0.0	0.0	0.362	0.000	0.362	0.000	0.362	0.09	0.0	0.0	0.0	0.0	0.0	0.0
Silver	---	---	0.003	0.000	0.0	0.000	0.005	0.001	0.003	0.000	0.005	0.001	0.003	0.000	0.0	0.0	0.003	0.000	0.003	0.000	0.003	0.00	0.0	0.0	0.0	0.0	0.0	0.0
Sulfate	---	---	494.9	24.3	0.0	0.00	150.0	19.6	495.3	24.3	244.2	43.9	494.9	0.00	0.0	0.0	175.4	0.00	175.4	0.00	175.4	43.9	1,674,971	79.8	0.0	0.0	70,864	0.3
Zinc	---	---	0.248	0.012	290.3	0.012	0.098	0.013	0.009	0.000	0.074	0.013	0.005	0.000	0.0	0.0	0.053	0.000	0.053	0.00	0.053	0.01	0.0	0.0	0.0	0.0	0.0	0.0
Total Tracked Cations / Anions	---	---	1,278.8	62.8	8,428.5	0.3	1,348.7	176.2	1,272.9	62.4	1,328.0	238.7	1,271.7	0.0	0.0	0.0	953.5	0.0	953.5	0.0	953.5	238.7	1,674,971	79.8	0.0	0.0	90,794	0.4
VOC (ug/L)																												
TIO	---	---	10.7	0.5	0.0	0.0	28.0	3.7	10.7	0.5	23.3	4.2	0.017	0.000	0.0	0.0	16.7	0.00	16.71	0.00	16.7	4.2	0.0	0.0	0.0	0.0	0.0	0.0
TOTAL ORGANICS	---	---	10.7	0.5	0.0	0.0	28.0	3.7	10.7	0.5	23.3	4.2	0.017	0.000	0.0	0.0	16.7	0.00	16.71	0.00	16.7	4.2	0.0	0.0	0.0	0.0	0.0	0.0
OTHER																												
TBOD5 (mg/L)	---	---	217.0	10.7	135,406	5.5	170.0	22.2	105.5	5.2	152.4	27.4	83.1	0.0	0.0	0.0	109.4	0.00	109.42	0.00	109.4	27.4	0.0	0.0	0.0	0.0	0.0	0.0
TSS (mg/L)	---	---	750	36.8	666,147	26.9	200.0	26.1	200.0	9.8	200	35.9	2.0	0.0	0.0	0.0	143.6	0.00	143.59	0.00	143.6	35.9	0.0	0.0	0.0	0.0	0.0	0.0
TP (mg/L)	---	---	0.6	0.0	0.0	0.0	0.7	0.1	0.6	0.0	0.7	0.1	0.5	0.0	0.0	0.0	0.5	0.00	0.50	0.00	0.5	0.1	0.0	0.0	0.0	0.0	0.0	0.0
TKN (mg/L)	---	---	38.7	1.9	0.0	0.0	47.0	6.1	38.7	1.9	44.74	8.0	30.5	0.0	0.0	0.0	32.1	0.00	32.12	0.00	32.1	8.0	0.0	0.0	0.0	0.0	0.0	0.0

PARAMETER	Polymer Add'n to Floc		Polymer Makeup Water		I.P. Clarifier Influent		I.P. Clarifier Sludge		I.P. Clarifier Effluent		Filter Feed Tank Disch		MMF Effluent		GAC Units		GAC Effluent		Spent MMF B/Wash		Spent GAC B/Wash		Eff. Tanks Discharge		PERMIT LIMIT
Line Number	15		16		17		18		19		20		21		22		23		24		25		26		
Column Designation	Concent.	lb/hr	Concent.	lb/hr	Concent.	lb/hr	Concent.	lb/hr	Concent.	lb/hr	Concent.	lb/hr	Concent.	lb/hr			Concent.	lb/hr	Concent.	lb/hr	Concent.	lb/hr	Concent.	lb/hr	
GENERAL																									
Flow Rate	---	0.13	---	65	---	250,271	---	31,284	---	218,987	---	218,987	---	218,987	---	---	---	218,987	---	10,396	---	7,361	---	201,165	NA
Flow Rate (GPM)	---	0.000	---	0.130	---	500	---	62.5	---	438	---	438	---	438	---	---	---	438	---	20.8	---	14.7	---	402	
Flow Rate (MGD)	---	0.000	---	0.000	---	0.72	---	0.090	---	0.63	---	0.63	---	0.63	---	---	---	0.63	---	0.030	---	0.021	---	0.6	
Temp (deg F)	---	Ambient	---	Ambient	---	Ambient	---	Ambient	---	Ambient	---	Ambient	---	Ambient	---	Ambient	---	Ambient	---	Ambient	---	Ambient	---	Ambient	< 150
Specific Gravity	---	1.00	---	1.00	---	1.00	---	1.00	---	1.00	---	1.00	---	1.00	---	---	---	1.00	---	1.00	---	1.00	---	1.00	
Design pH (S.U.)	6.5 - 7.5	---	9.0 - 10.0	---	8.5-10.5	---	8.5-10.5	---	8.5	---	8.5	---	8.5	---	---	---	9.0 - 10.0	---	8.5	---	9.0 - 10.0	---	9.0 - 10.0	---	5.5-10.5
CATIONS / ANIONS (mg/L)																									
Aluminum	0.0	0.0	2.699	0.000	3.410	0.854	8.388	0.263	2.699	0.591	2.699	0.591	2.699	0.591			2.699	0.591	2.699	0.028	2.7	0.020	2.7	0.5	---
Cadmium	0.0	0.0	0.003	0.000	0.003	0.001	0.003	0.000	0.003	0.001	0.003	0.001	0.003	0.001	---	0.000	0.003	0.001	0.003	0.000	0.003	0.000	0.003	0.001	2.0
Chlorides	0.0	0.0	772.4	0.050	772.4	193.5	772.41	24.2	772.41	169.28	772.41	169.28	772.41	169.3	---	0.000	772.4	169.3	772.4	8.04	772	5.7	772	156	---
Chromium	0.0	0.0	0.002	0.000	0.011	0.003	0.06	0.002	0.003	0.001	0.003	0.001	0.003	0.001	---	0.000	0.002	0.001	0.002	0.000	0.032	0.000	0.002	0.000	0.3
Hex Chromium	0.0	0.0	0.003	0.000	0.003	0.001	0.003	0.000	0.003	0.001	0.003	0.001	0.003	0.001	---	0.000	0.003	0.001	0.003	0.000	0.003	0.000	0.003	0.001	4.0
Copper	0.0	0.0	0.024	0.000	0.139	0.035	0.431	0.014	0.097	0.021	0.097	0.021	0.097	0.021	---	0.000	0.024	0.005	0.024	0.000	2.2	0.016	0.024	0.005	0.7
Lead	0.0	0.0	0.017	0.000	0.041	0.010	0.155	0.005	0.024	0.005	0.024	0.005	0.024	0.005	---	0.000	0.017	0.004	0.017	0.000	0.236	0.002	0.017	0.003	0.2
Mercury	0.0	0.0	0.000	0.000	0.006	0.001	0.045	0.001	1.750E-04	3.791E-05	1.73E-04	3.79E-05	1.73E-04	3.79E-05	---	0.00002	6.92E-05	1.52E-05	6.92E-05	7.20E-07	6.92E-05	5.10E-07	0.00007	0.00001	0.0002
Nickel	0.0	0.0	0.051	0.000	0.362	0.091	2.391	0.075	0.072	0.016	0.072	0.016	0.072	0.016	---	0.000	0.051	0.011	0.051	0.001	0.70	0.005	0.05	0.01	0.35
Silver	0.0	0.0	0.003	0.000	0.003	0.001	0.003	0.000	0.003	0.001	0.003	0.001	0.003	0.001	---	0.000	0.003	0.001	0.003	0.000	0.003	0.000	0.003	0.001	1.0
Sulfate	0.0	0.0	494.9	0.032	494.9	124.0	494.9	15.5	494.9	108.5	494.9	108.5	494.9	108.5	---	0.000	494.9	108.5	494.9	5.1	495	3.6	495	100	---
Zinc	0.0	0.0	0.005	0.000	0.053	0.013	0.349	0.011	0.011	0.002	0.011	0.002	0.011	0.002	---	0.000	0.005	0.001	0.005	0.000	0.162	0.001	0.005	0.001	0.4
Total Tracked Cations / Anions	0.0	0.0	1,271.7	0.1	1,273.1	318.9	1,280.9	40.1	1,272.0	278.8	1,272.0	278.8	1,272.0	278.8	---	0.000	1,271.7	278.7	1,271.7	13.2	1,280	9	1,272	256	---
VOC (ug/L)																									
TIO	0.0	0.0	0.017	0.000	16.7	4.2	16.7	0.5	16.7	3.66	16.7	3.7	16.7	3.7	---	3.7	0.017	0.004	0.017	0.000	0.017	0.000	0.017	0.003	0.1
TOTAL ORGANICS	0.0	0.0	0.017	0.000	16.7	4.2	16.7	0.5	16.7	3.66	16.7	3.7	16.7	3.7	---	3.7	0.017	0.004	0.017	0.000	0.017	0.000	0.017	0.003	---
OTHER																									
TBOD5 (mg/L)	0.0	0.0	83.1	0.0	109	27.4	262	8.2	87.5	19.2	87.5	19.2	87.5	19.2	---	0.0	83.1	18.2	83.1	0.9	213.2	1.6	83	17	NA
TSS (mg/L)	0.0	0.0	2.0	0.0	149	37.2	1136	35.6	7.4	1.6	7.4	1.6	5.0	1.1	---	0.0	2.0	0.4	53.1	0.6	91.3	0.7	2.0	0.4	NA
TP (mg/L)	0.0	0.0	0.5	0.00	0.5	0.1	0.5	0.0	0.5	0.1	0.5	0.1	0.5	0.1	---	0.0	0.5	0.1	0.47	0.00	1.2	0.0	0.47	0.1	NA
TKN (mg/L)	0.0	0.0	30.5	0.0	32.1	8.0	32.1	1.0	32.1	7.0	32.1	7.0	32.1	7.0	---	0.0	30.5	6.7	30.5	0.3	78.2	0.6	30	6	NA

Notes:
1. Cadmium, hexavalent chromium and silver were non-detect.
2. Molybdenum data and estimates are provided for informational purposes. A draft permit limit has not been established. Pre-Design Investigation (PDI) 6 will provide additional information regarding molybdenum.
3. The Geotube effluent TSS maximum anticipated value is 200 mg/L.
4. Sludge underflow from the I.P. Clarifier is 12.5% by influent volume.
5. Backwash design frequencies are: 1 time per day for each MMF unit, and 1 time per two-day period for each GAC unit.
6. Nickel removal is anticipated to occur at a pH of 10.5 S.U.
7. Parson's Mass Balance and O'Brien & Gere's Mass Balance correspond as follows: Parson's Node # 4 is equivalent to O'Brien & Gere's Node #16. Parsons Node #9 is equivalent to the sum of O'Brien & Gere Nodes # 18, 24 & 25. Parson's Node # 10 is equivalent to O'Brien & Gere's Node #9. Refer to Parsons' Mass Balance, Rev. A, 1/20/10.
8. O'Brien & Gere's in scope work for the SCA Water Treatment System begins at Node #11, the pH Adjust Tank Influent. Nodes #1 through #10 are presented for calculation purposes only, and are being addressed by Parsons.
9. Polymer is not planned to be used at the WTP. If required, usage would be as shown in Node #15.

IT IS A VIOLATION OF LAW FOR ANY PERSON, UNLESS ACTING UNDER THE DIRECTION OF A LICENSED ENGINEER, TO ALTER THIS DOCUMENT.

THIS DRAWING WAS PREPARED AT THE SCALE INDICATED IN THE TITLE BLOCK. INACCURACIES IN THE STATED SCALE MAY BE INTRODUCED WHEN DRAWINGS ARE REPRODUCED BY ANY MEANS. USE THE GRAPHIC SCALE BAR IN THE TITLE BLOCK TO DETERMINE THE ACTUAL SCALE OF THIS DRAWING.

PRELIMINARY NOT FOR CONSTRUCTION
DATE: 5/12/10

NO.	DATE	REVISION	INIT.
E	5/12/10	DP #2 FOR NYSDEC AND COUNTY REVIEW	
C	4/09/10	DP #2 ISSUED FOR HONEYWELL REVIEW	
B	3/10/10	DP #1 ISSUED FOR NYSDEC AND COUNTY REVIEW	
A	2/12/10	DP #1 DRAFT FOR HONEYWELL REVIEW	

NOT TO SCALE

O'BRIEN & GERE ENGINEERS INC.

2010 © O'Brien and Gere Engineers, Inc.

HONEYWELL INTERNATIONAL, INC.
DP #2
WATER TREATMENT PLANT
TOWN OF CAMILLUS, NEW YORK

MECHANICAL

MASS BALANCE – WINTER SEASON

IN CHARGE OF JSR
DESIGNED BY GBE CHECKED BY PDS
DRAWN BY LMW

FILE NO. 1163.45613-PFD2
DATE FEBRUARY 2010

PFD-3

I:\Honeywell.1163\45613.Sca-Wtp-Detaile\Docs\DWG\DP-2\Sheets\45613-PFD3.dwg