DRAFT DESIGN PACKAGE (DP) #3
TECHNICAL SPECIFICATIONS

Onondaga Lake Remedial Design
SCA Water Treatment Plant

Prepared for:

Honeywell

September 2010

1163/45613

DRAFT DESIGN PACKAGE (DP) #3
TECHNICAL SPECIFICATIONS

Onondaga Lake Remedial Design
SCA Water Treatment Plant

Prepared for:

Honeywell

301 Plainfield Road
Suite 330
Syracuse, New York 13212

Jeffrey S. Rogers, P.E.
Senior Vice President

September 2010

O'BRIEN & GERE

TABLE OF CONTENTS

TECHNICAL SPECIFICATIONS

Site/Civil

01160 Spill and Discharge Control
01170 Material Handling and Disposal
02111 Clearing and Grubbing
02141 Construction Water Management
02220 Earthwork
02222 Embankment
02226 Trenching, Backfilling and Compacting
02230 Select Fill
02270 Erosion and Sediment Control
02503 Restoration of Surfaces
02510 Bituminous Concrete Pavements
02600 Pipeline Installation
02602 Leakage Tests
02623 High Density Polyethylene (HDPE) Pressure Pipe
02625 Smooth Interior Corrugated Polyethylene Pipe
02675 Chlorination
02720 Vaults and Inlets
02730 Precast Concrete Manholes
03306 Concrete for Site Work
11300 Packaged Submersible Backwash Pumping Station
11390 Tests on Pumping Equipment
15000 Gate Valves 3-Inches and Larger

Structural

03 30 00 Cast-in-Place Concrete
05 12 00 Structural Steel Framing
05 21 00 Steel Joist Framing
05 50 00 Metal Fabrications
05 52 13 Pipe and Tube Railings
05 53 00 Metal Gratings
13 34 19 Metal Building Systems

Process/Mechanical

01300 Shop Drawings and Samples
09900 Field Painting
11390 Tests on Pumping Equipment
15001 Mechanical Completion and Commissioning
15003 Equipment
15004 Mechanical Installation
15060 Hangers, Supports, and Restraints

TABLE OF CONTENTS
(Continued)

Process/Mechanical (Continued)

15075 Mechanical Identification
15225 Pipe, Pipe Fittings, and Valves
15250 Mechanical Insulation
15992 Pipe Pressure Tests

HVAC

23 05 00 Common Work Results for HVAC
23 05 29 Hangers and Supports for HVAC Piping and Equipment
23 05 53 Identification for HVAC Piping and Equipment
23 05 93 Testing Adjusting and Balancing for HVAC
23 05 93.5 Pipe Pressure Tests for HVAC
23 07 00 HVAC Insulation
23 09 13 Instrumentation and Control Devices for HVAC
23 11 23 Propane Piping System
23 31 00 HVAC Ducts and Casing
23 33 00 Ductwork Accessories
23 34 00 HVAC Fans
23 55 33 Fuel Fired Unit Heaters
23 73 13 Indoor Central Station Air Handling Unit
23 81 13 Packaged Terminal Air Conditioners

Plumbing

22 05 00 Common Work Results for Plumbing
22 05 53 Identification for Plumbing Piping and Equipment
22 07 19 Plumbing Insulation
22 08 00 Cleaning and Testing
22 11 16 Domestic Water Piping
22 11 19 Domestic Water Piping Specialties
22 13 16 Sanitary Waste and Vent Piping
22 13 19 Sanitary Waste Piping Specialties
22 33 00 Electric Domestic Water Heaters
22 40 00 Plumbing Fixtures
22 45 00 Emergency Plumbing Fixtures

Major Equipment

44 42 23.07 Water Treatment Clarifiers - Inclined Plate
44 42 73 Frac Tanks
44 43 13.26 Multimedia Filtration
44 43 13.29 Granular Activated Carbon System

Instrumentation
40 91 00 Instrumentation and Controls Requirements

TABLE OF CONTENTS
(Continued)

Electrical

26 05 00 Electrical – General
26 05 13 Electric Motors
26 05 19 Wire and Cable
26 05 26 Grounding
26 05 33 Raceways, Boxes and Fittings
26 05 48 Electrical Identification
26 09 15 Electrical Control Components
26 22 13 Dry Type Transformers (600 V and Less)
26 24 16 Panelboards
26 24 19 Motor Control Centers
26 27 26 Wiring Devices
26 28 16 Enclosed Switches and Circuit Breakers
26 29 23 Variable Frequency Controllers
26 32 13 Diesel Engine Driven Generator Set
26 51 00 Lighting
28 31 11 Addressable Fire Alarm Systems

Miscellaneous Information

Pump Curves

SECTION 01160

SPILL AND DISCHARGE CONTROL

PART 1 GENERAL

1.1 WORK INCLUDED

A. Preparation, submission, and implementation of an acceptable Spill and Discharge Control Plan by the Contractor as specified herein and in accordance with all provisions of the Contract Documents.

1.2 APPLICABLE CODES, STANDARDS, AND SPECIFICATIONS

A. Not Used.

1.3 SUBMITTALS

A. The following items shall be submitted:

1. Spill and Discharge Control Plan

2. Spill Incident Reports

PART 2 PRODUCTS

2.1 GENERAL

A. Spill and Discharge Control (SDC) Plan

1. The Contractor shall develop, implement, maintain, supervise, and be responsible for a Spill and Discharge Control Plan. This SDC Plan shall provide contingency measures for potential spills of oil and hazardous materials and construction-related materials including, but not limited to, fuels, hydraulic fluids, lubricants, and construction water.

2. Procedures outlined in the SDC Plan shall follow applicable local, State, and Federal laws and regulations. The plan shall, at a minimum, contain the following:

a. Procedures for Containing Dry and Liquid Spills.
b. Absorbent Material available on-site.
c. Procedures for collection, storage, and handling/disposal of spilled materials.
d. Decontamination Procedures. Decontamination procedures may be required after cleanup to eliminate traces of the substance spilled or reduce it to an acceptable level. Acceptable levels shall be in accordance with all applicable local, State, and Federal laws and regulations and shall be approved by the New York State Department of Environmental Conservation (NYSDEC). Complete cleanup may require removal of contaminated soils. All contaminated materials that cannot be decontaminated must be

properly containerized, labeled, and properly disposed of within 90 days. Any and all testing and disposal costs related to the cleanup of a spill caused by the Contractor's activities shall be borne by the Contractor.

e. Spill Incident Report Format. A written report detailing the spill or discharge shall include, at a minimum, the cause and resolution of the incident, the substance and quantity spilled, outside agencies involved, date and time the incident occurred and actions taken to prevent incident reoccurrence. The report shall be submitted to the Owner's Representative, the Owner, and NYSDEC, within 24 hours of the incident, and earlier if necessary to comply with local, state, or federal regulations. The Contractor shall document the location of all spills on the Site Drawings and submit the Drawings to the Owner's Representative at project completion.

B. Spill and Discharge Control

1. The Contractor shall provide methods, means, equipment, facilities, and personnel required to prevent contamination of soil, water, air, equipment, or materials by the discharge of bulk wastes from spills due to Contractor's operations.

2. The Contractor shall provide methods, means, equipment, facilities and personnel to perform emergency measures required to contain any spillage and to remove spilled materials and soils or liquids that become contaminated due to spillage. All collected spill material shall be properly disposed of at the Contractor's expense.

C. Decontamination

1. The Contractor shall provide equipment and personnel to perform decontamination measures that may be required to remove spillage from previously uncontaminated structures, equipment, or material. Decontamination residues shall be properly disposed of at the Contractor's expense. Hazardous waste shall be handled in accordance with local, state and Federal regulations.

PART 3 EXECUTION

3.1 GENERAL

A. Contractor shall be responsible for all liabilities related to spills, discharges, leaks, or emissions from equipment, tankage, vessels, drums, or any other devices owned, operated, or controlled by the Contractor, his subcontractors, vendors, personnel, agents, or assigns.

B. In the case of a spill or discharge, the Contractor shall follow procedures outlined in the SDC Plan.

3.2 NOTIFICATION

A. The Contractor shall notify the Owner and Owner's Representative at the time of occurrence and follow-up in writing within 24 hours.

B. The Contractor shall report a spill or discharge to regulatory agencies, as necessary to comply with local, state, and federal regulations.

END OF SECTION

SECTION 01170

MATERIAL HANDLING AND DISPOSAL

PART 1 GENERAL

1.1 SUMMARY

A. Preparation, submission, and implementation by the contractor of an acceptable Material Handling and Disposal Plan, as specified herein and in accordance with all provisions of the Contract Documents.

B. Contractor shall develop and submit methods and sequencing of all intended operations hereinafter referred to as the Material Handling and Disposal Plan. The Material Handling and Disposal Plan shall include, but not be limited to, methods, plans, and drawings necessary for staging equipment, stockpiling materials, designating work zones and requirements for other construction activities. Construction activities shall not be initiated until the methods and sequencing of all operations are reviewed by the Owner's Representative. Review by the Owner's Representative does not relieve the Contractor of his obligations for the proper handling and disposal of the material.

1.2 RELATED WORK SPECIFIED ELSEWHERE

A. Construction Water Management, Section 02141

B. Earthwork, Section 02220

C. Trenching, Backfilling and Compacting, Section 02226

1.3 APPLICABLE PUBLICATIONS, CODES, STANDARDS, AND SPECIFICATIONS

NOT USED.

1.4 SUBMITTALS

A. The following items shall be submitted:

1. Material Handling and Disposal Plan

PART 2 PRODUCTS

2.1 MATERIAL HANDLING AND DISPOSAL PLAN

A. The Material Handling and Disposal Plan shall describe in detail the Contractor's plan for handling all materials during the execution of the work.

1. The Material Handling and Disposal Plan shall establish approaches for the handling of all materials except including means, methods, equipment, facility, personnel, and sequencing, that:

a. Minimize contamination of uncontaminated materials.

b. Minimize recontamination of cleaned areas or contamination of uncontaminated areas.

c. Minimize the tracking of contaminated and potentially contaminated material to uncontaminated areas on or off site.

d. Minimize the generation of dust.

e. Minimize the generation of construction water.

2. The Material Handling Plan and Disposal shall coordinate the management and tracking of all materials, through completion of construction activities.

3. The Material Handling and Disposal Plan shall also include, in detail:

a. The identification of exclusion zones, contamination reduction zones, and support zones, for the purpose of transport and handling of materials.

b. Procedures for decontaminating personnel and equipment, for the purpose of transport and handling of materials.

4. The Material Handling and Disposal Plan shall address handling hazardous waste in accordance all applicable Local, State and Federal regulations.

5. The Material Handling and Disposal Plan shall address material handling and disposal issues associated with the activities identified in this specification.

B. Acceptable methods of handling and disposal of material include, but are not limited to, the following:

1. Stockpiling of materials on 10 mil polyethylene sheeting and covered with 10 mil polyethylene sheeting at a location designated by the Owner.

2. Off-site disposal of spoil material in accordance with all applicable Local, State and Federal regulations.

PART 3 EXECUTION

3.1 GENERAL

A. The Contractor shall implement the Material Handling and Disposal Plan.

B. The Contractor shall update the Material Handling and Disposal Plan as necessary to incorporate changes in site conditions and construction activities.

C. It shall be the responsibility of the Contractor to investigate and comply with all applicable Federal, State, and Local laws and regulations governing the handling and temporary storage of materials.

D. The Contractor shall obtain all permits required for the handling and temporary storage of materials.

E. The Contractor shall be responsible for any sampling and analyses necessary to protect the health and welfare of the Contractor's employees and/or agents.

F.. Contractor shall provide assistance to Honeywell as required to mark, label, placard, package and manifest wastes in accordance with applicable codes, regulations, and statutes.

H. The Contractor shall make every effort to minimize the generation of spoil materials.

I. Material handling shall utilize equipment compatible with anticipated contaminants which may be present.

3.2 SOLIDS, HANDLING, AND DISPOSAL

A. Containerize solids and/or spoil to a relatively dry condition as determined by the Owner’s Representative.

B. Transport in watertight container to a site area designated by the Owner.

C. Place specified 10 mil polyethylene barrier on existing grade.

D. Place spoil.

E. Securely cover with 10 mil daily and at end of project.

3.3 DISPOSAL OF WASTES

A. Contractor shall characterize construction water related wastes and any settled solids, excavated materials, or other residuals as necessary for disposal at a site location designated by the Owner.

END OF SECTION

SECTION 02111

CLEARING AND GRUBBING

PART 1 GENERAL

1.1 SUMMARY

A. This Section includes clearing and grubbing by removal or destruction of trees, underbrush, logs, stumps, decayed or growing organic matter above the surface of the ground, and snow and ice which interfere with construction or landscaping, specified or directed within or adjacent to the lines of work.

1.2 RELATED WORK SPECIFIED ELSEWHERE

A. Earthwork, Section 02220

B. Restoration of Surfaces, Section 02503

PART 2 PRODUCTS

2.1 Not Used.

PART 3 EXECUTION

3.1 GENERAL

A. Only those portions of the site necessary and essential to be cleared for work shall be cleared.

B. Removal of brush, trees, stumps, and spoil

1. Contractor shall chip brush, tree trunks and tree limbs.

2. Contractor shall likewise chip tree stumps, provided however, that if the tree was located in a potentially contaminated area, all soil adhering to the stump must first be removed prior to chipping. Soil adhering to the stump shall be handled in a manner accepted by the Owner's Representative.

3. All chipped brush, trees, stumps, and spoil material shall be removed from the area and disposed of by the Contractor in a manner accepted by the Owner and Owner's Representative.

END OF SECTION

SECTION 02141

CONSTRUCTION WATER MANAGEMENT

PART 1 GENERAL

1.1 SUMMARY

A. This Section includes the Contractor's development and implementation of an acceptable Construction Water Management Plan. The plan shall include, but not be limited to, the responsible party for each task, the contractor's proposed method of handling, sampling and analyses, methods for minimizing the volume of construction water and associated sediments, storage (if necessary), treatment (if necessary) and disposal of construction water generated during construction in accordance with all applicable Local, State, and Federal regulations.

B. The Contractor is to obtain, and/or operate in substantial compliance, all required Local, State, and Federal Permits and requirements required to implement the proposed Construction Water Management Plan.

C. Provide all labor, materials, and equipment required for the handling of construction water in accordance with the approved Construction Water Management Plan.

1.3 SUBMITTALS

A. The following items shall be submitted:

1. Construction Water Management Plan

2. Shop drawings and test results used in design of the method of handling construction water.

1.4 REFERENCES

A. Materials and installation shall be in substantial compliance with the latest revisions of all applicable federal, state, and local codes, ordinances, regulations, statutes, standards and specifications, except where more stringent requirements have been specified herein.

B. Stormwater Pollution Prevention Plan (SWPPP).

PART 2 PRODUCTS

2.1 CONSTRUCTION WATER MANAGEMENT PLAN

A. The Contractor shall submit his plan for handling construction water. The plan shall include, but not be limited to, the responsible party for each task, the contractor's proposed method of handling, sampling and analyses (if required), methods for

minimizing the volume of construction water and associated sediments, storage (if necessary), treatment (if necessary) and disposal of construction water generated during construction.

B. Acceptable methods of handling construction water include, but are not limited to, the following:

1. Collection and on-site pretreatment to remove suspended solids, transport, and discharge in a manner consistent with the SWPPP at a location acceptable to the Owner' Representative, by Contractor.

C. Acceptable methods of handling sludge generated by the Contractor's management of construction water include, but are not limited to:

1. Collection, on-site transport and disposal in an area designated by the Owner, by Contractor consistent with the SWPPP.

PART 3 EXECUTION

3.1 GENERAL

A. It shall be the responsibility of the Contractor to investigate and obtain and/or operate in substantial compliance with all applicable federal, state, and local laws and regulations governing the handling and temporary storage of construction water and associated sediments.

B. The Contractor shall be responsible for any sampling and analyses necessary to protect the health and welfare of the Contractor's employees and/or agents.

C. The Contractor will be responsible for providing water storage tanks for temporary storage of collected construction water. At the time of project close out the contractor shall be responsible for cleaning the tanks and performing all decontamination, wash down and analytical to prove cleanliness to Owners satisfaction prior to leaving the site.

D. The Contractor shall make every effort to minimize the generation of construction water. Appropriate methods to minimize generation of construction and contaminated water include, but are not limited to, erection of temporary berms, use of low permeability tarpaulin or suitable means to cover exposed contaminated areas, limiting the amount of exposed contaminated areas, grading to control run-on and run-off, engineering controls on construction activities to minimize contact of personnel and equipment with contaminated areas thus minimizing the amount of decontamination required, and other appropriate methods.

E. Construction water and associated sediments, shall be handled in compliance with the SWPPP using equipment compatible with anticipated contaminants which may be present.

END OF SECTION

SECTION 02220

EARTHWORK

PART 1 GENERAL

1.1 SUMMARY

A. This Section includes excavation and backfilling including the loosening, removing, refilling, transporting, storage and disposal of all materials classified as "earth" necessary to be removed for the construction and completion of all work under the Contract, and as shown on the Contract Drawings, specified or directed.

1.2 REFERENCES

A. Materials and installation shall be in accordance with the latest revisions of the following codes, standards, and specifications, except where more stringent requirements have been specified herein:

1. American Society for Testing and Materials (ASTM)

   a. A328 Specification for Steel Sheet Piling
   b. D698 Test Method for Laboratory Compaction Characteristics of Soil Using Standard Effort (12,400 ft-lbf/ft^3) (600 kN-m/m^3)
   c. D1556 Test Method for Density and Unit Weight of Soil in Place by the Sand-Cone Method
   d. D1760 Specification for Pressure Treatment of Timber Products
   e. D2922 Test Methods for Density of Soil and Soil Aggregate in Place by Nuclear Methods (Shallow Depth)

1.3 DEFINITIONS

A. Excavation (or Trenching)

1. Grubbing, stripping, removing, storing and rehandling of all materials of every name and nature necessary to be removed for all purposes incidental to the construction and completion of all the work under construction.

2. All sheeting, sheetpiling, bracing and shoring, and the placing, driving, cutting off and removing of the same.

3. All diking, ditching, fluming, cofferdamming, pumping, bailing, draining, well pointing, or otherwise disposing of water.

4. The removing and disposing of all surplus materials from the excavations in the manner specified.

5. The maintenance, accommodation and protection of travel.

6. The supporting and protecting of all tracks, rails, buildings, curbs, sidewalks, pavements, overhead wires, poles, trees, vines, shrubbery, pipes, sewers, conduits or other structures or property in the vicinity of the work,

whether over- or underground or which appear within or adjacent to the excavations, and the restoration of the same in case of settlement or other injury.

7. All temporary bridging and fencing and the removing of same.

B. Earth

1. All materials such as Solvay waste, sand, gravel, clay, loam, ashes, cinders, pavements, muck, roots or pieces of timber, soft or disintegrated rock, not requiring blasting, barring, or wedging from their original beds, and specifically excluding all ledge or bedrock and individual boulders or masonry larger than one-half cubic yard in volume.

C. Backfill

1. The refilling of excavation and trenches to the line of filling indicated on the Contract Drawings or as directed using materials suitable for refilling of excavations and trenches; and the compacting of all materials used in filling or refilling by rolling, ramming, watering, puddling, etc., as may be required.

D. Spoil

1. Surplus excavated materials not required or not suitable for backfills or embankments.

E. Embankments

1. Fills constructed above the original surface of the ground or such other elevation as specified or directed.

F. Limiting Subgrade

1. 6-inches below the underside of the pipe barrel for pipelines

2. 6-inches below the underside of footing lines for structures

G. Excavation Below Subgrade

1. Excavation below the limiting subgrades of structures or pipelines.

2. Where materials encountered at the limiting subgrades are not suitable for proper support of structures or pipelines, the Contractor shall excavate to such new lines and grades as required.

PART 2 PRODUCTS

2.1 MATERIALS AND CONSTRUCTION

A. Wood Sheeting and Bracing

1. Shall be sound and straight; free from cracks, shakes and large or loose knots; and shall have dressed edges where directed.

2. Shall conform to National Design Specifications for Stress Grade Lumber having a minimum fiber stress of 1200 pounds per square inch.

3. Sheeting and bracing to be left-in-place shall be pressure treated in accordance with ASTM D1760 for the type of lumber used and with a preservative approved by the Owner's Representative.

B. Steel Sheeting and Bracing

1. Shall be sound

2. Shall conform to ASTM A328 with a minimum thickness of 3/8 inch.

PART 3 EXECUTION

3.1 UNAUTHORIZED EXCAVATION

A. Whenever excavations are carried beyond or below the lines and grades shown on the Contract Drawings, or as given or directed by the Owner's Representative, all such excavated space shall be refilled with special granular materials, concrete or other materials as the Owner's Representative may direct. All refilling of unauthorized excavations shall be at the Contractor's expense.

B. All material which slides, falls or caves into the established limits of excavations due to any cause whatsoever, shall be removed and disposed of at the Contractor's expense and no extra compensation will be paid the Contractor for any materials ordered for refilling the void areas left by the slide, fall or cave-in.

3.2 REMOVAL OF WATER

A. General

1. The Contractor shall at all times provide and maintain proper and satisfactory means and devices for the removal of all water entering the excavations, and shall remove all such water as fast as it may collect, in such manner as shall not interfere with the prosecution of the work or the proper placing of pipes, structures, or other work.

2. Unless otherwise specified, all excavations which extend down to or below the static groundwater elevations shall be dewatered by lowering and maintaining the groundwater beneath such excavations at all times when work thereon is in progress, during subgrade preparation and the placing of the structure or pipe thereon.

3. Water shall not be allowed to rise over or come in contact with any masonry, concrete or mortar, until at least 24 hours after placement, and no stream of water shall be allowed to flow over such work until such time as the Owner's Representative may permit.

4. Where the presence of fine grained subsurface materials and a high groundwater table may cause the upward flow of water into the excavation with a resulting quick or unstable condition, the Contractor shall install and operate a well point system to prevent the upward flow of water during construction.

5. Water pumped or drained from excavations, or any sewers, drains or water courses encountered in the work, shall be managed per Section 02141 Construction Water Management and without injury to adjacent property, the work under construction, or to pavements, roads, drives, and water courses. No water shall be discharged to sanitary sewers.

6. Any damage caused by or resulting from dewatering operations shall be the sole responsibility of the Contractor.

B. Work Included

1. The construction and removal of sheeting and bracing, and the furnishing of materials and labor necessary therefore.

2. The excavation and maintenance of ditches.

3. The furnishing and operation of pumps, well points, and appliances needed to maintain thorough drainage of the work in a satisfactory manner.

3.3 STORAGE OF MATERIALS

A. Sod

1. Any sod cut during excavation shall be removed and stored during construction so as to preserve the grass growth. Sod damaged while in storage shall be replaced in like kind at the sole expense of the Contractor.

B. Topsoil

1. Topsoil suitable for final grading shall be removed and stored separately from other excavated material.

C. Excavated Materials

1. All excavated materials shall be stored in locations so as not to endanger the work, and so that easy access may be had at all times to all parts of the excavation. Stored materials shall be kept neatly piled and trimmed, so as to cause as little inconvenience as possible to public travel or to adjoining property holders. Erosion & Sediment control practices shall be installed, inspected, and maintained around stockpiled material.

2. Special precautions must be taken to permit access at all times to fire hydrants, fire alarm boxes, police and fire department driveways, and other points where access may involve the safety and welfare of the general public.

3.4 DISPOSAL OF MATERIALS

A. Spoil Material

1. All spoil materials shall be disposed of on site in a location designated by the Owner's Representative and as required by the local, state or federal regulations pertaining to the area.

2. The surface of all spoil areas shall be graded and dressed and no unsightly mounds or heaps shall be left on completion of the work.

3.5 SHEETING AND BRACING

A. Installation

1. The Contractor shall furnish, place and maintain such sheeting, bracing and shoring as may be required to support the sides and ends of excavations in such manner as to prevent any movement which could, in any way, injure the pipe, structures, or other work; diminish the width necessary for construction; otherwise damage or delay the work of the Contract; endanger existing structures, pipes or pavements; or cause the excavation limits to exceed the right-of-way limits.

2. In no case will bracing be permitted against pipes or structures in trenches or other excavations.

3. Sheeting shall be driven as the excavation progresses, and in such manner as to maintain pressure against the original ground at all times. The sheeting shall be driven vertically with the edges tight together, and all bracing shall be of such design and strength as to maintain the sheeting in its proper position. Seepage which carries fines through the sheeting shall be plugged to retain the fines.

4. Where breast boards are used between soldier pile, the boards shall be back packed with soil to maintain support.

5. The Contractor shall be solely responsible for the adequacy of all sheeting and bracing.

B. Removal

1. In general, all sheeting and bracing, whether of steel, wood or other material, used to support the sides of trenches or other open excavations, shall be withdrawn as the trenches or other open excavations are being refilled. That portion of the sheeting extending below the top of a pipe or structural foundation shall not be withdrawn, unless otherwise directed, before more than 6 inches of earth is placed above the top of the pipe or structural foundation and before any bracing is removed. The voids left by the sheeting shall be carefully refilled with selected material and rammed tight with tools especially adapted for the purpose or otherwise as may be approved.

2. The Contractor shall not remove sheeting and bracing until the work has attained the necessary strength to permit placing of backfill.

C. Left in Place

1. If, to serve any purpose of his own, the Contractor files a written request for permission to leave sheeting or bracing in the trench or excavation, the Owner's Representative may grant such permission, in writing, on condition that the cost of such sheeting and bracing be assumed and paid by the Contractor.

2. The Contractor shall leave in place all sheeting, shoring and bracing which are shown on the Contract Drawings or specified to be left in place or which the Owner's Representative may order, in writing, to be left in place. All shoring, sheeting and bracing shown or ordered to be left in place will be paid for under the appropriate item of the Contract. No payment allowance will be made for wasted ends or for portions above the proposed cutoff level which are driven down instead of cut-off.

3. In case sheeting is left in place, it shall be cut off or driven down as directed so that no portion of the same shall remain within 24 inches of the street subgrade or finished ground surface.

3.6 BACKFILLING

A. General

1. All excavations shall be backfilled to the original surface of the ground or to such other grades as may be shown, specified or directed.

2. Backfilling shall be done with suitable excavated materials which can be satisfactorily compacted during refilling of the excavation. In the event the excavated materials are not suitable, Special Backfill as specified or ordered by the Owner's Representative shall be used for backfilling.

3. Any settlement occurring in the backfilled excavations shall be refilled and compacted.

B. Unsuitable Materials

1. Stones, pieces of rock or pieces of pavement greater than 1 cubic foot in volume or greater than 1.5 feet in any single dimension shall not be used in any portion of the backfill.

2. All stones, pieces of rock or pavement shall be distributed through the backfill and alternated with earth backfill in such a manner that all interstices between them shall be filled with earth.

3. Frozen earth shall not be used for backfilling.

C. Compaction and Density Control

1. The compaction shall be as specified for the type of earthwork, i.e., structural, trenching or embankment.

   a. The compaction specified shall be the percent of maximum dry density.
   b. The compaction equipment shall be suitable for the material encountered.

2. Where required, to assure adequate compaction, in-place density test shall at the expense of the Contractor be made by an approved testing laboratory.

   a. The moisture-density relationship of the backfill material shall be determined by ASTM D698, Method D.
      1) Compaction curves for the full range of materials used shall be developed.
   b. In-place density shall be determined by the methods of ASTM D1556 or ASTM D2922 and shall be expressed as a percentage of maximum dry density.

3. Where required, to obtain the optimum moisture content, the Contractor shall add, at his expense, sufficient water during compaction to assure the specified maximum density of the backfill. If, due to rain or other causes, the material exceeds the optimum moisture content, it shall be allowed to dry, assisted if necessary, before resuming compaction or filling efforts.

4. The Contractor shall be responsible for all damage or injury done to pipes, structures, property or persons due to improper placing or compacting of backfill.

3.7 OTHER REQUIREMENTS

A. Drainage

1. All material deposited in roadway ditches or other water courses shall be removed immediately after backfilling is completed and the section, grades and contours of such ditches or water courses restored to their original condition, in order that surface drainage will be obstructed no longer than necessary.

B. Unfinished Work

1. When, for any reason, the work is to be left unfinished, all trenches and excavations shall be filled and all roadways, sidewalks and watercourses left unobstructed with their surfaces in a safe and satisfactory condition. The surface of all roadways and sidewalks shall have a temporary pavement.

C. Hauling Material on Streets

1. When it is necessary to haul material over the streets or pavements, the Contractor shall provide suitable tight vehicles so as to prevent deposits on

the streets or pavements. In all cases where any materials are dropped from the vehicles, the Contractor shall clean up the same as often as required to keep the crosswalks, streets and pavements clean and free from dirt, mud, stone and other hauled material.

D. Dust Control

1. It shall be the sole responsibility of the Contractor to control the dust created by any and all of his operations to such a degree that it will not endanger the safety and welfare of the general public.

2. Calcium chloride, chemicals, and petroleum products shall not to be used for dust control.

E. Test Pits

1. For the purpose of obtaining detail locations of underground obstructions, the Contractor shall make excavations in advance of the work or as ordered by Owner's Representative. Test pits shall include sheeting, bracing, pumping, excavation and backfilling.

END OF SECTION

SECTION 02222

EMBANKMENT

PART 1 GENERAL

1.1 SUMMARY

A. This Section includes construction of earth embankments constructed to established lines and grades at the locations shown on the Contract Drawings and as directed by the Owner's Representative.

1.2 REFERENCES

A. Materials and installation shall be in accordance with the latest revisions of the following codes, standards and specifications, except where more stringent requirements have been specified herein:

1. American Society for Testing and Materials (ASTM)

   a. D698 Test Method for Laboratory Compaction Characteristics of Soil Using Standard Effort (12,400 ft-lbf/ft^3) (600 kN-m/m^3)
   b. D1556 Test Method for Density and Unit Weight of Soil in Place by the Sand-Cone Method
   c. D2922 Test Methods for Density of Soil and Soil Aggregate in Place by Nuclear Methods (Shallow Depth)

1.3 SUBMITTALS

A. The following items shall be submitted:

1. Proposed testing laboratory

2. Source of off-site materials

3. Compaction curves for all materials to be used

1.4 TESTING

A. All testing, including field and laboratory services, shall be at the Contractor's expense without additional compensation, except where separate payment is specified.

PART 2 PRODUCTS

2.1 GENERAL

A. Embankment material shall be free from frost, stumps, trees, roots, sods, muck, marl, vegetable matter or other unsuitable material and shall be suitable for compaction as described in the following provisions. Where embankments are to be placed underwater only acceptable granular materials shall be used.

B. Embankment materials shall be obtained from acceptable soils on the site, or approved off-site sources.

PART 3 EXECUTION

3.1 PREPARATION OF SUBGRADE

A. The entire surface to be covered with embankment shall be grubbed and stripped of all grass, vegetation, topsoil, rubbish, or other unsuitable materials before any embankment material is placed.

1. Topsoil shall be stockpiled or placed as designated.

2. Other grubbed and stripped materials shall be removed as spoil.

B. Stripped or excavated surfaces on which embankments are to be placed shall be compacted to the required density of the embankment prior to any fill being placed.

3.2 PLACEMENT AND COMPACTION

A. Materials shall be placed in lifts not greater than 8 inches of thickness unless greater thicknesses are allowed by the Owner's Representative upon demonstration by the Contractor that the materials and compaction efforts are adequate to obtain the required density.

B. Material shall be placed in a uniform lift and thoroughly compacted by compaction equipment suitable for the material encountered to obtain the required density prior to the placement of succeeding lift.

1. Each lift shall be tested for proper compaction before successive lifts are applied.

C. Stones shall not exceed 6 inches in greatest dimension and shall be well distributed throughout the soil mass. Stone shall be defined as rock material either in its natural or broken state.

D. Stones not well mixed with soil material shall not be used in earth embankments unless the stone material is sufficiently deteriorated or friable so as to be compactible to achieve minimum voids and required density.

E. If the required density is not obtained, compaction of the embankment shall continue until specified densities are obtained, before any additional embankment is placed. Improperly compacted embankment shall be removed.

F. Where required, the Contractor shall, at his expense, add sufficient water during the compaction effort to assure proper density. If, due to rain or other causes, the material exceeds the optimum moisture content for satisfactory compaction, it shall be allowed to dry, assisted by discing or harrowing, if necessary, before compaction or filling effort is resumed.

G. The Contractor shall be required to seal the working surface at the close of each day's operation and when practical prior to rainfall. Sealing shall be accomplished by rolling the surface with a smooth wheel steel roller.

H. Compaction or consolidation achieved by traveling trucks, machines and other equipment will not be accepted unless such procedures are approved by the Engineer and proper compaction density is achieved.

I. Hand tamping shall be required around buried utility lines or other subsurface features that could be damaged by mechanical compaction equipment.

J. Embankments shall be constructed to such elevations as to make allowance for any settlement that may occur. Prior to the construction of any structure, roadway or other ground feature and before final acceptance of the contract, the Contractor shall regrade the embankments to conform to the established lines and grades.

3.3 DENSITY CONTROL

A. Embankments shall be compacted to 90% of maximum dry density as determined by the density tests designated in ASTM D 698, Method D.

1. Compaction curves for the full range of soil materials to be used in the embankment shall be developed by an approved independent testing laboratory.

B. Field control samples shall be taken and tested by the testing laboratory as required to assure that adequate compaction of the embankment material is being achieved.

C. A minimum of one (1) in-place density test shall be made for every (10,000) square feet of compacted area per lift.

1. In-place density of soils shall be determined by the methods described in ASTM D1556 or ASTM D2922 and expressed as a percentage of the maximum dry density.

END OF SECTION

SECTION 02226

TRENCHING, BACKFILLING AND COMPACTING

PART 1 GENERAL

1.1 SUMMARY

A. This Section includes excavation and backfill as required for pipe installation or other construction in the trench, and removal and disposal of water, in accordance with the applicable provisions of the Section entitled "Earthwork" unless modified herein.

PART 2 PRODUCTS

NOT USED

PART 3 EXECUTION

3.1 EXCAVATION

A. The trench excavation shall be located as shown on the Contract Drawings or as specified. Under ordinary conditions, excavation shall be by open cut from the ground surface. Where the depth of trench and soil conditions permit, tunneling may be required beneath cross walks, curbs, gutters, pavements, trees, driveways, railroad tracks and other surface structures. No additional compensation will be allowed for such tunneling over the price bid for open cut excavation of equivalent depths below the ground surface unless such tunnel excavation is specifically provided for in the Contract Documents.

B. Trenches shall be excavated to maintain the depths as shown on the Contract Drawings or as specified for the type of pipe to be installed.

C. The alignment and depth shall be determined and maintained by the use of a string line installed on batter boards above the trench, a double string line installed along side of the trench or a laser beam system.

D. The minimum width of trench excavation shall be 6 inches on each side of the pipe hub for 21-inch diameter pipe and smaller and 12 inches on each side of the pipe hub for 24-inch diameter pipe and larger.

E. Trenches shall not be opened for more than 300 feet in advance of pipe installation nor left unfilled for more than 100 feet in the rear of the installed pipe when work is in progress without the consent of the Owner’s Representative. Open trenches shall be protected and barricaded as required.

F. Bridging across open trenches shall be constructed and maintained where required.

3.2 SUBGRADE PREPARATION FOR PIPE

A. Where pipe is to be laid on undisturbed bottom of excavated trench, mechanical excavation shall not extend lower than the finished subgrade elevation at any point.

B. Where pipe is to be laid on special granular material, the excavation below subgrade shall be to the depth specified or directed. The excavation below subgrade shall be refilled with special granular material as specified or directed, shall be deposited in layers not to exceed 6 inches and shall be thoroughly compacted prior to the preparation of pipe subgrade.

C. The subgrade shall be prepared by shaping with hand tools to the contour of the pipe barrel to allow for uniform and continuous bearing and support on solid undisturbed ground or embedment for the entire length of the pipe.

D. Pipe subgrade preparation shall be performed immediately prior to installing the pipe in the trench. Where bell holes are required they shall be made after the subgrade preparation is complete and shall be only of sufficient length to prevent any part of the bell from becoming in contact with the trench bottom and allowing space for joint assembly.

3.3 STORAGE OF MATERIALS

A. Traffic shall be maintained at all times in accordance with the applicable Highway Permits. Where no Highway Permit is required, at least one-half of the street or access road must be kept open for traffic.

B. The material excavated from a trench length shall be removed by the Contractor, at his cost and expense and placed in a location designated by the Owner.

C. The Contractor shall refill trenches with embankment or select fill and excess excavated materials shall be disposed of as spoil.

3.4 REMOVAL OF WATER AND DRAINAGE

A. The Contractor shall at all times provide and maintain proper and satisfactory means and devices for the removal of all water entering the trench, and shall remove all such water as fast as it may collect, in such manner as shall not interfere with the prosecution of the work.

B. The removal of water shall be in accordance with the Section entitled "Earthwork".

3.5 PIPE EMBEDMENT

A. All pipe shall be protected from lateral displacement and possible damage resulting from superimposed backfill loads, impact or unbalanced loading during backfilling operations by being adequately embedded in suitable pipe embedment material. To ensure adequate lateral and vertical stability of the installed pipe during pipe jointing and embedment operations, a sufficient amount of the pipe embedment material to hold the pipe in rigid alignment shall be uniformly deposited and thoroughly compacted on each side, and back of the bell, of each pipe as laid.

B. Concrete cradle and encasement of the class specified shall be installed where and as shown on the Contract Drawings or ordered by the Owner's Representative. Before any concrete is placed, the pipe shall be securely blocked and braced to prevent movement or flotation. The concrete cradle or encasement shall extend the full width of the trench as excavated unless otherwise authorized by the Engineer. Where concrete is to be placed in a sheeted trench it shall be poured directly against sheeting to be left in place or against a bond-breaker if the sheeting is to be removed.

C. Embedment materials placed above the centerline of the pipe or above the concrete cradle to a depth of 12 inches above the top of the pipe barrel shall be deposited in such manner as to not damage the pipe. Compaction shall be as required for the type of embedment being installed.

3.6 BACKFILL ABOVE EMBEDMENT

A. The remaining portion of the pipe trench above the embedment shall be refilled with suitable materials compacted as specified.

1. Where trenches are within the Site Limits or road or within a driveway, shall be under a structure, the trench shall be refilled in horizontal layers not more than 8 inches in thickness, and compacted to obtain 95% maximum density, and determined as set forth in the Section entitled "Earthwork".

2. Where trenches are in open fields or unimproved areas, the trench shall be refilled in horizontal layers not more than 8 inches in thickness, and compacted to obtain 90% maximum density.

3. Hand tamping shall be required around buried utility lines or other subsurface features that could be damaged by mechanical compaction equipment.

B. Backfilling of trenches beneath, across or adjacent to drainage ditches and water courses shall be done in such a manner that water will not accumulate in unfilled or partially filled trenches and the backfill shall be protected from surface erosion by adequate means.

1. Where trenches cross waterways, the backfill surface exposed on the bottom and slopes thereof shall be protected by means of stone or concrete rip-rap or pavement.

C. All settlement of the backfill shall be refilled and compacted as it occurs.

END OF SECTION

SECTION 02230

SELECT FILL

PART 1 GENERAL

1.1 SUMMARY

A. This Section includes select fill materials used in either embedment or special backfill, as specified or as directed by the Owner.

1.2 REFERENCES

A. Materials and installation shall be in accordance with the latest revisions of the following codes, standards, and specifications, except where more stringent requirements have been specified herein:

1. American Society for Testing and Materials (ASTM)

a. D422 - Method for Particle-Size Analysis of Soil

1.3 SUBMITTALS

A. The following items shall be submitted:

1. The name and location of the source of the material.

2. Samples and test reports of the material.

1.4 DEFINITIONS

A. Embedment or Lining

1. Any type granular material specified or directed placed below an imaginary line drawn one foot above the inside diameter of the pipe and within the trench limits.

B. Special Backfill

1. Pipelines

a. Any select fill material specified or directed placed above an imaginary line drawn one foot above the inside diameter of the pipe and within the trench limits.

2. Structures

a. Any select fill material specified or directed placed within the excavation limits, either in, under or adjacent to the structure.

C. Special Granular Material

1. Special granular material shall mean any of the granular materials listed below or other materials ordered by the Owner.

PART 2 PRODUCTS

2.1 MATERIALS

A. Type A

1. Crushed Gravel

a. Thoroughly washed crushed, durable, sharp angled fragments of gravel free from coatings. Crushed particles shall be a minimum of 85% by weight of the particles with at least two fractured faces. The total area of each fractional face shall exceed 25% of the maximum cross-sectional area of the particle.

b. Crushed gravel shall have the following gradation by weight:

% Passing	Sieve
100%	1½-inch
0-25%	¾-inch
0-5%	½-inch

B. Type B

1. Crushed Stone

a. Thoroughly washed clean, sound, tough, hard crushed limestone or approved equal free from coatings. Gradation for crushed stone shall be the same as specified for Type A material.

C Type E

1. Run-of-Bank Gravel

a. Run-of-bank gravel or other acceptable granular material free from organic matter with a gradation by weight of 100% passing a 1½-inch square opening, 30 to 65% passing a 1/4-inch square opening and not more than 10% passing a No. 200 mesh sieve as determined by washing through the sieve in accordance with ASTM D422.

D Type F

1. Run-of-crusher Stone

a. Run-of-crusher hard durable limestone or approved equal having the following gradation by weight:

% Passing	Sieve
100	1½- inch
95 – 100	1
65 – 80	½
40 – 60	¼
0 – 10	#200 Sieve

PART 3 EXECUTION

3.1 INSTALLATION

A. Special granular material as specified or directed for pipeline embedment shall be placed in accordance with the Section entitled "Trenching, Backfilling and Compacting".

B. Special backfill where specified or directed shall be placed in accordance with the backfilling provisions of the Section entitled "Trenching, Backfilling, and Compacting", and the Section entitled "Earthwork".

3.2 DISPOSAL OF DISPLACED MATERIALS

A. Materials displaced through the use of SELECT fill shall be wasted or disposed of by the Contractor and the cost of such disposal shall be included in the unit price bid for each of the materials.

3.3 SETTLEMENTS

A. Any settlements in the finished work shall be made good by the Contractor.

END OF SECTION

SECTION 02270

EROSION AND SEDIMENT CONTROL

PART 1 GENERAL

1.1 SUMMARY

A. This Section includes diversion swales, silt fences, stabilized construction entrance, and other permanent and temporary erosion and sediment control measures intended to minimize erosion of soils and sedimentation of drainage channels and lands adjacent to or affected by the work.

B. Provide temporary vegetation for all areas disturbed by construction.

1.2 REFERENCES

A. Materials and installation shall be in accordance with the latest revisions of the following codes, documents and standards and specifications, except where more stringent requirements have been specified herein:

1. New York State Standards and Specifications for Erosion and Sediment Control
2. NYSDEC SPDES General Permit for Stormwater Discharges for Construction Activity (GP-0-10-001)
3. Stormwater Pollution Prevention Plan (SWPPP)

1.3 SUBMITTALS

A. The following items shall also be submitted.

1. Shop drawings of erosion and sediment control materials.

PART 2 PRODUCTS

2.1 MATERIALS

A. The Contractor shall provide all necessary supervision, labor, equipment and materials as needed to perform the specified work.

B. Materials shall include silt fence, stone, or other manufactured products to reduce erosion and control siltation as specified on the Contract Drawings.

2.2 SILT FENCE

A. Provide and install as indicated on the Contract Drawings or as directed by the Owner's Representative.

2.3 STABILIZED CONSTRUCTION ENTRANCE

A. Provide and install as indicated on the Contract Drawings or as directed by the Owner's Representative.

2.4 TEMPORARY VEGETATION

A. Temporary vegetation shall consist of a mixture of quick germinating, fast growing perennial rye grass mixed with sweet or white clover with an application rate of 50 pounds per acre.

B. Fertilizer shall be applied at the rate of 400 pounds per acre using 15-15-15 or equivalent. Soils which are highly acidic should be limed.

C. Mulch shall be a moist straw or hay and applied at the rate of 2 tons per acre.

D. The seed furnished by the Contractor shall not be more than two years old. Germination tests of the seed proposed to be used shall be made not more than six months prior to seeding operations and a certificate of such tests shall be furnished to the Owner's Representative. When directed by the Owner's Representative, the above mixture may be varied to suit any special condition of soil peculiar to the areas to be seeded. Seed which has become wet, moldy, or otherwise damaged in transit or storage shall not be acceptable.

PART 3 EXECUTION

3.1 INSTALLATION

A. Install erosion and sediment control facilities as shown on the Contract Drawings or directed by the Owner's Representative and in accordance with the SWPPP.

B. Temporary Vegetation

1. Spread fertilizer and work into soil by discing or other approved methods.

2. Spread seed by hand or approved sowing equipment at a rate of 50 pounds per acre.

3. After sowing has been completed, apply mulch evenly over the entire seeded area at a rate of 2 tons per acre. Wet mulch immediately after placing. Compact area by two passes of a smooth drum roller, one 90° to the other to the extent possible.

3.2 MAINTENANCE

A. Maintain silt fences as needed, and remove sediment when bulges develop in silt fence.

B. Inspect and install stone dressing on the stabilized construction entrance as necessary or as directed.

C. Install additional erosion control devices in areas as necessary during construction. Place erosion control devices as directed by the Owner's Representative.

END OF SECTION

SECTION 02503

RESTORATION OF SURFACES

PART 1 GENERAL

1.1 SUMMARY

A. This Section includes restoration and maintenance of all types of surfaces, culverts and other features disturbed, damaged or destroyed during the performance of the work under or as a result of the operations of the Contractor.

B. The quality of materials and the performance of work used in the restoration shall produce a surface or feature equal to the condition of each before the work began.

1.2 REFERENCES

A. Materials and installation shall be in accordance with the latest revisions of the following codes, standards and specifications, except where more stringent requirements have been specified herein:

1. American Society for Testing and Materials (ASTM)

a. D698 - Test Method for Laboratory Compaction Characteristics of Soil Using Standard Effort (12,400 ft-lbf/ft^3) (600 kN-m/m^3)

1.3 SUBMITTALS

A. The following items shall be submitted:

1. A schedule of restoration operations. After an accepted schedule has been agreed upon it shall be adhered to unless otherwise revised with the approval of the Owner's Representative.

PART 2 PRODUCTS

NOT USED

PART 3 EXECUTION

3.1 GENERAL

A. The replacement of surfaces at any time, as scheduled or as directed, shall not relieve the Contractor of responsibility to repair damages by settlement or other failures.

3.7 STONE OR GRAVEL PAVEMENT

A. All pavement and other areas surfaced with stone or gravel shall be replaced with material to match the existing surface unless otherwise specified.

1. The depth of the stone or gravel shall be at least equal to the existing.

2. After compaction the surface shall conform to the slope and grade of the area being replaced.

3.9 LAWNS AND IMPROVED AREAS

A. The area to receive topsoil shall be graded to a depth of not less than 4 inches or as specified, below the proposed finished surface.

1. If the depth of existing topsoil prior to construction was greater than 4 inches, topsoil shall be replaced to that depth.

B. The furnishing and placing of topsoil, seed and mulch.

C. When required to obtain germination, the seeded areas shall be watered in such a manner as to prevent washing out of the seed.

D. Any washout or damage which occurs shall be regraded and reseeded until a good sod is established.

E. The Contractor shall maintain the newly seeded areas, including regrading, reseeding, watering and mowing, in good condition.

3.10 OTHER TYPES OF RESTORATION

A. Water courses shall be reshaped to the original grade and cross-section and all debris removed. Where required to prevent erosion, the bottom and sides of the water course shall be protected.

B. Culverts destroyed or removed as a result of the construction operations shall be replaced in like size and material and shall be replaced at the original location and grade. When there is minor damage to a culvert and with the consent of the Engineer, a repair may be undertaken, if satisfactory results can be obtained.

3.11 MAINTENANCE

A. The finished products of restoration shall be maintained in an acceptable condition for and during a period of one year following the date of Substantial Completion or other such date as set forth elsewhere in the Contract Documents.

END OF SECTION

SECTION 02510

BITUMINOUS CONCRETE PAVEMENTS

PART 1 GENERAL

1.1 SUMMARY

A. This Section includes construction of two course bituminous concrete pavement on a prepared base laid to the required grade, thickness and cross-section as shown on the Contract Drawings or as specified in this Section.

B. The quality of materials and performance of the work shall be in accordance with the Standards of the New York State Department of Transportation unless otherwise specified in this Section.

1.2 REFERENCES

A. Materials and installation shall be in accordance with the latest revisions of the following codes, standards and specifications, except where more stringent requirements have been specified herein:

1. New York State Department of Transportation

PART 2 PRODUCTS

2.1 MATERIALS AND CONSTRUCTION

A. Soil Stabilization Material

1. Mirafi 500X

2. Tensar geogrid BX1200

B. Bituminous Concrete Products

1. The base course shall be as shown on the Contract Documents

2. The wear course shall be as shown on the Contract Documents

PART 3 EXECUTION

3.1 INSTALLATION

A. Install finished pavement to the grades and cross-sections as shown on the Contract Drawings.

B. Subgrade

1. The subgrade shall be shaped to line and grade and compacted with self-propelled rollers.

2. All depressions which develop under rolling shall be filled with acceptable material and the area re-rolled.

3. Soft areas shall be removed and filled with acceptable materials and the area re-rolled.

4. Should the subgrade become rutted or displaced prior to the placing of the subbase it shall be reworked to bring to line and grade.

C. Soil Stabilization Material

1. The soil stabilization fabric shall be placed on the subgrade prior to the depositing of the subbase.

   a. The soil stabilization fabric shall be the full width of the subgrade and shall extend up the sides the depth of the subbase.
   b. The fabric shall be lapped in accordance with manufacturer's recommendations.

D. Subbase

1. The subbase shall be as shown on the Contract Drawings placed in 6-inch layers. Each layer shall be compacted by rolling with self-propelled rollers.

   (Note: The loose lift thickness shall be a minimum of 1.5 times the maximum particle size with a minimum of 6 inches.)

2. Rolling shall begin at the sides and continue toward the center and shall continue until there is no movement ahead of the roller.

3. After completion of the subbase rolling there shall be no hauling over the subbase other than the delivery of material for the top course.

E. Bituminous Material

1. The bituminous base course shall be 3-1/2 compacted depth.

2. The bituminous wear course shall be 1-1/2 compacted depth.

3. Prior to placing of any bituminous pavement a sealer shall be applied to the edges of existing pavement, curbing, gutters, manholes and other structures.

3.2 FIELD TESTING

A The surface tolerance shall not exceed 1/4 inch in 10 feet.

B. There shall be no depressions which will retain standing water.

C. Variations exceeding 1/4 inch or depressions shall be satisfactorily corrected.

END OF SECTION

SECTION 02600

PIPELINE INSTALLATION

PART 1 GENERAL

1.1 SUMMARY

A. This Section includes all metallic and non-metallic pipelines as shown on the Contract Drawings, complete with fittings and specials.

B. Certain features of pipes shall be as scheduled.

1.2 REFERENCES

A. Materials and installation shall be in accordance with the latest revisions of the following codes, standards, and specifications, except where more stringent requirements have been specified herein:

1. American Society of Testing and Materials (ASTM)

2. American Water Works Association (AWWA)

1.3 SUBMITTALS

A. The following items shall be submitted:

1. Manufacturer's certification that all materials furnished are in compliance with the applicable requirements of the referenced standards and this specification.

2. Layout drawings are required for pipelines to be installed within structures, showing the location including the support system, sleeves and appurtenances.

PART 2 PRODUCTS

2.1 MATERIALS AND CONSTRUCTION

A. Pipe

1. Materials for the piping, joints and fittings shall be as specified in the Section for the type of pipe to be installed, shown in the pipe schedule or on the Contract Drawings.

a. Pipe and appurtenances shall comply with the applicable standards for its type of material.

B. Joints

1. Type of joints shall be as scheduled in the pipe schedule or as shown or noted on the Contract Drawings.

C. Inspection

1. Pipe and appurtenances shall be inspected by the Contractor in the presence of the Engineer on delivery and prior to installation for conformance with the standards and specifications.

a. Materials not conforming to the standards and specifications shall not be stored on site but removed at once and replaced with material conforming to the specifications.

PART 3 EXECUTION

3.1 INSTALLATION - UNDERGROUND

A. General

1. Install pipelines, fittings, specials, and accessories in accordance with the configuration shown on the Contract Drawings.

2. Excavation and backfilling shall be in accordance with the applicable provisions of the Section entitled "Trenching, Backfilling and Compacting".

3. Blocking will not be permitted under pipe, except where the pipe is to be laid with concrete cradle or encasement.

4. No pipe shall be laid upon a foundation in which frost exists; nor at any time when there is danger of the formation of ice or the penetration of frost at the bottom of the excavation.

5. Temporary bulkheads shall be placed in all open ends of pipe whenever pipe laying is not actively in process. The bulkheads shall be designed to prevent the entrance of dirt, debris or water.

6. Precautions shall be taken to prevent the flotation of the pipe in the event of water entering the trench.

B. Location and Grade

1. Pipelines and appurtenances shall be located as shown on the Contract Drawings or as directed and as established from the control survey in accordance with the Special Provisions.

2. The alignment and grades shall be determined and maintained by a method acceptable to the Engineer.

C. Subgrade

The subgrade for pipelines shall be earth or special embedment as specified or directed and shall be prepared in accordance with the Section entitled "Trenching, Backfilling and Compacting".

D. Joints

1. Joints shall be assembled using gaskets, lubricants and solvents as furnished by the pipe manufacturer and in accordance with the manufacturer's recommendations.

E. Embedment

1. Embedment shall be deposited and compacted in accordance with the Section entitled "Trenching, Backfilling and Compacting", and the Section for the type of pipe being installed and shall be one of the embedments shown below unless otherwise specified or directed.

2. Pipe of: High Density Polyethylene Pipe
Smooth Interior Corrugated Polyethylene Pipe
Polyvinyl Chloride
Ductile Iron

a. The embedment shall consist of compacted Type F granular materials placed from a depth of 6 inches below the pipe to a depth of 12 inches over the pipe.

1) Embedment material shall be deposited and hand-compacted in 6-inch maximum layers.

3.2 INSTALLATION – ON GRADE

A. General

1. Install pipelines, fittings, specials, and accessories in accordance with the configuration shown on the Contract Drawings.

2. Above ground Pipe (pipe installed on grade) shall be blocked with concrete anchor blocks and bollards or as directed by the Owner’s Representative.

3.3 FIELD TESTING

A. Perform leakage tests in accordance with the applicable provisions of the Section entitled “Leakage Tests”, at the test pressure specified or scheduled.

3.4 CUTTING

A. Field cuts of pipes shall be in accordance with the manufacturer's instructions.

END OF SECTION

SECTION 02602

LEAKAGE TESTS

PART 1 GENERAL

1.1 SUMMARY

A. This Section includes leakage tests of all hydraulic structures, pressure and non-pressure piping for leakage as specified.

1. The Contractor shall furnish all labor, equipment, test connections, vents, water and materials necessary for carrying out the pressure and leakage tests.

B. All testing shall be witnessed by the Owner's Representative.

1.2 SUBMITTALS

A. The following items shall be submitted:

1. Reports of test results.

PART 2 PRODUCTS

NOT USED

PART 3 EXECUTION

3.1 LEAKAGE TESTS FOR STRUCTURES

A. Tanks, vaults, wells and other fluid containing structures, (excluding manholes and unless otherwise noted, structures used in storm sewer systems) shall be tested before backfilling by filling the structure with water to overflowing, or other level as may be directed by the Engineer, and observing the water surface level twenty-four hours thereafter.

1. When testing absorbent materials such as concrete, the structure shall be filled with water at least 24 hours before the test is started.

B. The exterior surface, especially at the construction joint, will be inspected for leakage during and upon completion of the 24 hour test.

1. Leakage will be considered to be within the allowable limits when there is no visible sign of leakage on the exterior surface and where the water surface does not drop except as associated with evaporation.

2. A slight dampness on the exterior wall surface during the test period will not be considered as leakage, except in the case of prestressed concrete structures.

3.2 TESTS ON PRESSURE PIPING FOR TRANSPORT OF FLUIDS

A. General

1. Pipelines designed to transport water, sewage or other fluids under pressure shall be tested hydrostatically and for leakage prior to being placed in service.

2. The length of piping and sections included in the tests shall meet the approval of the Owners Representative.

3. Equipment in or attached to the pipes being tested shall be protected. Any damage to such equipment during the test shall be repaired by the Contractor at his expense.

4. When piping is to be insulated or concealed in a structure, tests shall be made before the pipe is covered.

5. All fittings, hydrants and appurtenances must be properly braced and harnessed before the pressure is applied. Thrust restraining devices which will become a part of the system must also be tested at the test pressure.

6. When testing absorbent pipe materials, the pipeline shall be filled with water at least 24 hours before the test is made.

7. If the line fails the test, the Contractor shall explore for the cause of the excessive leakage and after repairs have been made the line shall be retested. This procedure shall be repeated until the pipe complies.

B. Pressure Test

1. Test pressure shall be as scheduled or, where no pressure is scheduled, shall be 150 psi.

2. Test pressure shall be held on the piping for a period of at least 2 hours, unless a longer period is requested by the Owners Representative.

C. Leakage Test

1. The leakage test shall be conducted concurrently with the pressure test.

2. The rate of leakage shall be determined at 15-minute intervals by means of volumetric measurement of the makeup water added to maintain the test pressure. The test shall proceed until the rate of leakage has stabilized or is decreasing below an allowable value, for three consecutive 15-minute intervals. After this, the test pressure shall be maintained for at least another 15 minutes.

   a. At the completion of the test the pressure shall be released at the furthermost point from the point of application.

3. All exposed piping shall be examined during the test and all leaks, defective material or joints shall be repaired or replaced before repeating the tests.

4. The allowable leakage for pressure pipelines shall not exceed the following in gallons per 24 hours per inch of diameter per mile of pipe:

Type of Pipe	Leakage
Ductile iron	10
Polyvinyl chloride, thermal plastic or fiberglass with rubber joints	10
Polyvinyl chloride, thermal plastic or fiberglass with solvent-cemented joints	0
High Density Polyethylene, with butt fused joints	0
All piping inside structures	0

5. Regardless of the above allowables, any visible leaks shall be permanently stopped.

3.3 TEST FOR NON-PRESSURE PIPELINES FOR TRANSPORT OF WATER OR SEWAGE

A. General

1. Pipelines designed to carry water or sewage in open channel flow or at minimal pressures shall be tested for leakage prior to being placed in service.

2. The leakage shall be determined by exfiltration, infiltration or low pressure air.

   a. The testing method directed by the Owner’s Representative shall take into consideration the groundwater elevation of the section of pipe being tested.
   b. The maximum non-pressure pipeline to be tested for leakage shall be the section between manholes or 600 feet as directed by the Owner’s Representative.

3. Intermediate leakage tests during construction shall be made at the Contractor's discretion. Upon completion of any pipeline, the entire system including manholes shall be tested for compliance to allowable leakage.

4. When testing absorbent pipe materials such as cement or concrete, the pipeline shall be filled with water at least 24 hours before the test is made.

5. Groundwater level shall be determined by the Contractor prior to any testing by reading the water level at the observation pipe in the manholes.

6. If the line fails the test, the Contractor shall explore for the cause of the excessive leakage and after repairs have been made the line shall be retested. This procedure shall be repeated until the pipe complies.

B. Exfiltration Testing

1. Exfiltration tests shall be made by filling a section of pipeline with water and measuring the quantity of leakage.

2. The head of water at the beginning of the test shall be at least 2 feet above the highest pipe within the section being tested.

   a. Should groundwater be present within the section being tested, the head of water for the test shall be 2 feet above the hydraulic gradient of the groundwater.

   b. Should the requirement of 2 feet of water above the highest pipe subject any joint at the lower end of the test section to a differential head of greater than 11.5 feet another method of testing shall be employed.

C. Infiltration Testing

1. Infiltration tests will be allowed only when the water table gauges determine the groundwater level to be 2 feet or more above the highest pipe of the section being tested.

2. Infiltration test shall be made by measuring the quantity of water leaking into a section of pipeline.

3. Measurement of the infiltration shall be by means of a calibrated weir constructed at the outlet of the section being tested.

D. Allowable Leakage for Non-Pressure Pipelines

The allowable leakage (exfiltration or infiltration) for non- pressure pipelines shall not exceed the following in gallons per 24 hours per inch of diameter per 1000 feet of pipe:

Type of Pipe	Leakage
Ductile iron - mechanical or push-on joints	10
Polyvinyl chloride, thermal plastic or fiberglass with rubber joints	10
Polyvinyl chloride, thermal plastic or fiberglass with solvent-cemented joints	0
All piping inside structures	0

Regardless of the above allowable leakage any spurting leaks detected shall be permanently stopped.

E. Air Testing

1. For the acceptance of air testing in lieu of hydrostatic testing (exfiltration or infiltration), the Contractor shall perform hydrostatic and air tests on at least three sections of pipeline for each type of pipe being used. The Owner's Representative shall select the sections for the corroborative tests. If these duel tested sections indicate the same results, that is, acceptance under both tests, air testing will be allowed in lieu of hydrostatic testing to meet the project requirements.

2. Air testing for acceptance shall not be performed until the backfilling has been completed.

3. Low pressure air tests shall conform to ASTM C 828 except as specified herein and shall not be limited to type or size of pipe.

4. All sections of pipelines shall be cleaned and flushed prior to testing.

5. The air test shall be based on the average holding pressure of 3 psi gauge, a drop from 3.5 to 2.5 psi, within the period of time allowed for the size of pipe and the length of the test section. The time allowed for the 1 psi drop in pressure, measured in seconds, will be computed by the Engineer and will be based on the limits of ASTM C 828.

   a. When groundwater is present the average test pressure of 3 psig shall be above any back pressure due to the groundwater level.
   b. The maximum pressure allowed under any condition in air testing shall be 10 psig. The maximum groundwater level for air testing is 13 feet above the top of the pipe.

6. The equipment required for air testing shall be furnished by the Contractor and shall include the necessary compressor, valves and gauges to allow for the monitoring of the pressure, release of pressure and a separable test gauge.

   a. The test gauge shall be sized to allow for the measuring of the one psig loss allowed during the test period and shall be on a separate line to the test section.

3.4 MANHOLE TESTING

A. General

1. Each manhole shall be tested by either exfiltration or infiltration.

2. A manhole will be acceptable if the leakage does not exceed an allowable of one gallon per vertical foot of depth for 24 hours. Regardless of the allowable leakage any leaks detected shall be permanently stopped.

B. Exfiltration test may be performed prior to or after backfilling. The test shall be made by filling the manhole with water and observing the level for a minimum of eight hours.

C. Infiltration tests shall be performed when the groundwater level is above the joint of the top section of a precast manhole.

3.5 TEST PRESSURE

PIPE	TEST PRESSURE
a. Backwash Pump Station Force Main	50 psi
b. Water	150 pi
c. Effluent Line	50 psi
d. Chemical Lines (secondary Pipe)	10 psi

END OF SECTION

SECTION 02623

HIGH DENSITY POLYETHYLENE (HDPE) PRESSURE PIPE

PART 1 GENERAL

1.1 SCOPE OF WORK

A. Single wall and dual wall polyethylene pipe of the classification, size, and use as specified and as shown on the Contract Drawings.

1.2 QUALITY ASSURANCE

A. Prior to initiating joining of the pipe the Contractor or his subcontractor shall present evidence to the Owner's Representative of having successfully installed HDPE piping using this method on a minimum of three previous projects.

B. The Contractor shall test and certify each weld.

C. All testing including field services needed during installation of the pipe shall be provided by the Contractor.

1.3 APPLICABLE CODES, STANDARDS AND SPECIFICATIONS

Stormwater

A. American National Standards Institute (ANSI)

B. American Society for Testing and Materials (ASTM)

C. Plastics Pipe Institute (PPI)

D. DOT Regulations

1.4 SUBMITTALS

A. Drawings and manufacturer's data of the pipe, joints and fittings showing compliance with this Specification.

B. Copies of Leakage test results

C. Submit five (5) copies of manufacturer's affidavit that all delivered materials comply with the following criteria:

Parameter	Standard	Criteria
Density	ASTM D1505	0.941 - 0.955 gm/cc
Melt Flow Index	ASTM D1238 Condition E	Less Than 4 gm/10 min
Percent Carbon Black	ASTM D1603	2.5%
Hydrostatic Design Basis	ASTM D2837	Minimum of 1600 psi
Environmental Stress	ASTM D1693	
Crack Resistance	Condition C	Greater Than 5000 hours

Parameter	Standard	Criteria
Flexural Modulas	ASTM D790	110,000 - 160,000 psi
Tensile Strength	ASTM D638	3,000 - 3,500 psi

PART 2 PRODUCT

2.1 MATERIALS

A. GENERAL

1. High density polyethylene pipe shall be constructed from PE 3408 high molecular weight polyethylene piping having a cell classification of PE 345434C and conforming to ASTM D3350.

2. Acceptable manufacturers are Performance Pipe or equal.

B. Fittings and Couplings

1. High density polyethylene piping fittings and couplings shall conform to the requirements of HDPE pipe for classification and size.

2. The high density polyethylene pipe fittings and couplings shall be capable of withstanding the pressure required for the leakage test specified.

3. Fittings larger than 8-inch shall be fabricated. All fabricated fittings shall be one (1) class (SDR/DR) stronger than the mainline pipe.

4. Where mechanical couplings are called for, a steel sleeve in accordance with the manufacturer's recommendations shall be used. Electrofusion couplings, up to 30-inches in diameter, shall be used where typical fusion welding is impractical.

C. Joints

Unless otherwise specified, joints for pipe and fittings shall be fusion welded in accordance with the manufacturer's recommendations.

1. All fusion welders shall be qualified per the DOT code of Federal Regulations Title 49 Part 192.285.

2. Restrained joint mechanical adapters shall be used for connecting to valves and other appurtenances unless indicated otherwise.

3. Flanged joints shall be used only when ordered by the Owner's Representative.

   a. Gaskets shall be 1/8" thick soft natural or synthetic rubber with a durometer of 73, plus or minus 4."
   b. Steel bolts and nuts shall be cadmium plated.
   c. Backup (follower) rings shall be Ductile Iron.

PART 3 EXECUTION

3.1 INSTALLATION

A. High density polyethylene pipe shall be handled and stored in accordance with the manufacturer's recommendations.

B. The interior fusion bead shall be removed from all pipe joints and disposed of by the Contractor

3.2 TESTING

A. Pipe shall be hydrostatically tested in accordance with Section entitled, “Leakage Tests”.

END OF SECTION

SECTION 02625

SMOOTH INTERIOR CORRUGATED POLYETHYLENE PIPE

PART 1 GENERAL

1.1 SUMMARY

A. This Section includes the requirements for procurement, transportation, storage, handling, and installation of smooth interior corrugated polyethylene pipe (SICPP) as a storm drainage conduit with watertight joints.

B. The SICPP shall be installed to the prescribed lines and grades at the locations indicated on the Contract Drawings or as directed by the Owner.

1.2 REFERENCES

A. Materials and installation shall be in accordance with the latest revisions of the following codes, standards, and specifications, except where more stringent requirements have been specified herein:

1. American Society for Testing and Materials (ASTM)

   a. D-1248 - Standard Specification for Polyethylene Plastics Molding and Extrusion Materials.
   b. D-2321 - Standard Practice for Underground Installation of Thermoplastic Pipe for Sewers and Other Gravity Flow Applications.
   c. D-3350 - Standard Specification for Polyethylene Plastics Pipe and Fitting Materials.
   d. F-405 - Standard Specification for Corrugated Polyethylene Tubing and Fittings.
   e. F-667 - Standard Specification for Large Diameter Corrugated Polyethylene Tubing and Fittings.

2. American Association of State Highway and Transportation Officials (AASHTO)

   a. M-252 - Specification for Corrugated Polyethylene Drainage Tubing.
   b. M-294 - Specification for Corrugated Polyethylene Pipe.

1.3 SUBMITTALS

A. Contractor’s certification that all products, materials, construction, and installation complies with the applicable requirements of the referenced standards, this specification and the Contract Drawings.

B. A list of minimum property values for the pipe and fittings.

C. Manufacturer's product literature including, but not limited to, parts lists, materials of construction, operations & maintenance requirements, specifications, drawings, and installation guidelines, which demonstrate compliance with this specification.

1.4 QUALITY ASSURANCE

A. Pipe shall be marked with the manufacturer's name, product identification, lot number, pipe size, and pipe length.

1.5 STORAGE AND PROTECTION

A. Transportation is the responsibility of the Contractor who shall be liable for all damages prior to and during transportation to the site.

B. Handling, storage, and care on-site is the responsibility of the Contractor prior to, during, and after installation.

1.6 PLACEMENT AND HANDLING

A. Handle all materials in such a manner as to ensure it is not damaged in any way.

B. Materials shall not be dragged.

C. During placement, care shall be taken not to entrap stones, excessive dust, or moisture that could hamper subsequent performance. If pipe is not free of debris and soil prior to installation, the Contractor shall clean material prior to installation.

D. The Owner will examine the drainage piping over the entire surface to ensure that no potentially harmful foreign objects are present. Any foreign objects so encountered shall be removed by the Contractor or the pipe shall be replaced.

PART 2 PRODUCTS

2.1 MANUFACTURERS

A. The following manufacturers are named to establish a standard of quality necessary for the Project:

1. Hancor, Inc. – Blue Seal

2. Or equal.

2.2 PIPE

A. The drainage pipe and fittings shall be smooth interior, corrugated, high density polyethylene (HDPE) with dimensions as shown on the Contract Drawings.

B. Piping shall meet all requirements of AASHTO M-294.

C. Pipe joints and fittings shall be water tight and conform to AASHTO M-252 or AASHTO M-294, or be approved by the Owner and shall be watertight.

PART 3 EXECUTION

3.1 INSTALLATION

A. Installation shall be in accordance with the specification.

B. Pipe shall be joined with internal or external couplers, or coupling banks and fittings supplied by the pipe manufacturer covering at least two full corrugations on each of the pipe ends.

C. The Contractor shall protect the ends of the drain pipes from being damaged or from allowing foreign objects (*e.g.*, debris, sand, filter fabric) from entering the pipes.

D. Each pipe shall be inspected by the Contractor prior to making connections to ensure pipe is free of foreign objects. Any foreign objects shall be removed by the Contractor.

E. The Contractor shall exercise care to thoroughly compact the bedding material under the haunches of the pipe and to ensure that the material is in intimate contact with the pipe. The selected backfill shall be brought up evenly in layers on both sides of the pipe until the trench is filled to the required elevation.

F. The Contractor shall replace or repair any damaged pipe as directed by the Engineer at no additional cost to the Owner.

G. The Contractor is responsible for all excavation and backfill required for complete installation of the drain pipe.

3.2 CONFORMANCE TESTING

A. Samples of materials delivered to the site may be collected for testing to confirm conformance with the properties in Part 2 of this Specification at the Owner's discretion.

B. Samples, if required, will be obtained by the Owner. All testing performed will be paid for by the Contractor.

END OF SECTION

SECTION 02675

CHLORINATION

PART 1 GENERAL

1.1 SUMMARY

A. This Section includes the cleaning, chlorinating and flushing of all pipelines or structures which shall carry or hold potable water, as shown on the Contract Drawings, including all chemicals required.

1.2 REFERENCES

A. Materials and installation shall be in accordance with the latest revisions of the following codes, standards and specifications, except where more stringent requirements have been specified herein:

1. American Water Works Association (AWWA)

1.3 USE OF WATER

A. Permission shall be obtained from the owner of the water system before the use of water from any existing system. The Subcntractor shall:

1. Conform to the requirements of the water system owner.

2. Pay all costs connected with the taking or use of water.

3. Give notice at least 24 hours before the use of water for any reason.

B. All work under this section shall be performed in the presence of the Owners Representative and a representative of the public health authority having jurisdiction, as required.

C. Chlorination shall be scheduled such that sampling and flushing will be performed during normal daylight working hours.

1.4 SUBMITTALS

A. The following items shall be submitted:

1. Material Safety and Data Sheets for all chemicals to be used.
2. Test results

PART 2 PRODUCTS

2.1 MATERIALS AND CONSTRUCTION

A. Chlorination shall be by the use of a solution of water and liquid chlorine, calcium hypochlorite or sodium hypochlorite and the solution shall be contained in the pipe or structure as specified.

PART 3 EXECUTION

3.1 APPLICATION

A. Prior to chlorination, all dirt and foreign matter shall be removed by a thorough cleaning and flushing of the pipeline or structure.

B. The chlorine solution shall be admitted to pipelines through corporation stops placed in the horizontal axis of the pipe, to structures by means of tubing extending directly into the structure or other approved methods.

C. The application of the chlorine solution shall be by means of a solution feed device. The rate of chlorine solution flow shall be in such proportion to the rate of water entering the pipe or structure that the resulting free chlorine residual shall not be less than l00 parts per million (PPM), milligrams per liter (mg/l).

D. The slug method may be used for chlorination of pipelines with the prior approval of the Owners Representative and shall be in accordance with AWWA C651, Section 5.3.

E. The chlorine treated water shall be retained in the pipe or structure at least 24 hours, unless otherwise directed. During the retention period all valves and hydrants within the treated sections shall be operated.

F. The chlorine residual shall be not less than 25 PPM (mg/l) at any point in the pipe or structure at the end of the retention period.

G. When making repairs to or when specified, structures and portions of pipelines shall be chlorinated by a concentrated chlorine solution containing not less than 200 PPM (mg/l) of free chlorine. The solution shall be applied with a brush or sprayed on the entire inner surface of the empty pipes or structures. The surfaces disinfected shall remain in contact with the strong chlorine solution for at least 30 minutes.

3.2 FLUSHING

A. After the required retention of chlorinated water in the pipe or structures they shall be thoroughly flushed until the replacement water shall, upon test, both chemically and bacteriologically, be proven equal to the water quality served to the public from the existing water supply system.

B. The disposal of chlorinated water from any pipe or structure shall contain no more than 0.5 ppm residual chlorine (unless a lower limit is shown, specified, or required). This residual chlorine limit is established to prevent damage to vegetation, fish, or animal life.

C. After final flushing and before the new main is connected to the distribution system, two consecutive sets of acceptable samples, taken at least 24 hours apart, shall be collected from the new main. At least one set of samples shall be collected from every 1,200 ft (366 m) of the new water main, plus one set from the end of the line and at least one set from each branch. Certification forms must include the

bacteriological results, the dates of sampling, and detailed information on sampling location.

3.3 FIELD TESTING

A. The Contractor shall make all arrangements for the testing of water quality. In areas where the testing of water quality is not performed by the public health authority, the Contractor shall have the required test made by an approved independent laboratory. The results of all tests shall be forwarded to the Owners Representative and the public health authority having jurisdiction.

B. The Contractor shall provide the men and tools as may be required by the Owners Representative or the public health authority in the sampling for testing of water quality.

C. All water quality requirements shall be fulfilled prior to the passage of any water through the new system to a public supply or the use of the new system.

END OF SECTION

SECTION 02720

VAULTS AND INLETS

PART 1 GENERAL

1.1 SUMMARY

A. This Section includes valve and meter vaults, catch basins, curb inlets, surface water inlets, and similar structures, complete with frames and covers, manhole steps and appurtenances as shown on the Contract Drawings.

1.2 REFERENCES

A. Materials and installation shall be in accordance with the latest revisions of the following codes, standards and specifications, except where more stringent requirements have been specified herein:

1. American Society for Testing and Materials (ASTM)

2. American Association of State Highway Transportation Officials (ASHTO)

PART 2 PRODUCTS

2.1 MATERIALS AND CONSTRUCTION

A. Concrete

1. Cast-in-place concrete for vaults and inlets shall be as specified under the Section entitled "Concrete".

2. Precast concrete sections shall be in accordance with ASTM C478 for manhole sections and ASTM C913 for other structures with a minimum wall thickness of 5 inches. Top sections shall withstand H-25 wheel loads and shall be of the type shown.

a. Bell and spigot joints of precast sections shall have an appropriate "O" or square Buna-N rubber section ring as supplied by the manufacturer.

B. Masonry Units

1. Brick shall meet the requirements of ASTM C62, Grade SW, and shall be of a hard-burned manufacture.

C. Mortar

1. Masonry cement for mortar shall meet the requirements of ASTM C 91, Type II and shall be mixed with a graded quality sand conforming to ASTM C144.

2. Mix shall be one part masonry cement to three parts sand using the minimum amount of clean water required for workability.

D. Castings

1. Frames and covers, grates, inlets, and other castings shall be as shown on the Contract Drawings and be in accordance with ASTM A48, Class 30. All castings shall be manufactured to withstand H-25 wheel loads. Frames and covers shall have machined bearing surfaces.

2. Steps shall be manhole steps manufactured of cast iron in accordance with ASTM A48, Class 30 or others acceptable to the Engineer.

a. Steps shall have a minimum tread width of 16 inches.

E. Coatings

1. The exterior surfaces of the precast concrete manholes shall be waterproofed with two (2) coats of Koopers 300M or equal 8 mils each for a total DFT of 16 mils.

PART 3 EXECUTION

3.1 INSTALLATION

A. Precast Sections

1. Precast sections shall be installed level on a flat stable subgrade. Where an unstable condition exists, the Contractor shall excavate the unstable material and replace with compacted granular material.

2. All joints shall be filled inside and out with mortar to provide a smooth and continuous surface.

B. Benchwalls and Inverts

1. Mortar surfaces of benchwalls and concrete floors shall be given a broom finish. Where inverts are required they shall be lined with a half section of pipe of the same type used for the sewer or shall be constructed of Class "C" concrete, shaped and troweled to produce a smooth circular cross-section.

C. Frames and Castings

1. Frames and castings shall be set in a full bed of mortar a maximum of 1/2" thick. Where required to adjust the frames and castings to grade there shall be installed to a maximum of four brick courses.

D. Steps

1. Steps shall be installed in vertical alignment spaced 12 inches on center.

2. In concrete sections the steps shall be cast into the section or secured with cadmium plated bolts to threaded inserts which are precast into the concrete.

3. In masonry construction the steps shall be built into the masonry walls.

E. Plastering

1. Plaster shall be with mortar not less than ☐nch thick and troweled smooth.

2. Outside of masonry structures.

3. Inside and outside of brick courses under frames and castings.

F. Sumps

1. Sumps of the size specified shall be built into the floors of vaults and similar structures. Floors shall be sloped to the sump.

3.2 FIELD TESTING

A. Perform leakage tests in accordance with the applicable provisions of the Section entitled “Leakage Tests”.

END OF SECTION

SECTION 02730

PRECAST CONCRETE MANHOLES

PART 1 GENERAL

1.1 SUMMARY

A. This Section includes precast manholes of the type scheduled with construction as shown on the Contract Drawings. All manholes shall consist of the combination of base and barrel sections resulting in the fewest number of joints.

1.2 REFERENCES

A. Materials and installation shall be in accordance with the latest revisions of the following codes, standards and specifications, except where more stringent requirements have been specified herein:

1. American Society for Testing and Materials (ASTM)
2. American Association of State Highway Transportation Officials (AASHTO)

PART 2 PRODUCTS

2.1 MATERIALS AND CONSTRUCTION

A. Manhole Sections

1. Precast concrete pipe sections and slabs shall be constructed and reinforced in accordance with ASTM C478, with a minimum wall thickness of 5 inches and with joints having an "O" ring or square Buna N section ring seal.

   a. Manhole sections shall be waterproofed with bituminous material on the exterior.

2. Base sections shall have reinforced flat bottoms protruding 6 inches beyond the outside face of the riser section. The flat bottoms shall be:

   a. Minimum of 6-inch thickness for risers up to and including 48-inch diameter.

   b. Minimum of 8-inch thickness for risers of larger diameter.

3. Each opening in the base section for sewers up to and including 20-inch diameter shall contain a flexible rubber connection installed by the manufacturer of the base section.

.

a. Flexible rubber connectors shall be:

1) KOR-N-SEAL
2) Lock Joint Flexible Manhole Sleeve
3) Or equal

4. Top sections, tapered or flat, shall be adequate to withstand H-25 wheel loads. All top sections shall have concentric or eccentric opening as specified or shown for the type of manhole.

B. Manhole Steps

1. Steps for manholes shall be manufactured of cast iron in accordance with ASTM A48, Class 30 or others acceptable to the Owner's Representative.

2. Steps shall be installed in each manhole in vertical alignment spaced 12 inches on center and shall be placed over the largest benchwall of the manhole.

3. Steps shall have a minimum tread width of * (12 or 16) inches and shall be cast into the manhole sections or other methods of installation with prior acceptance of the Owner's Representative.

C. Frames and Covers

1. Manhole frames and covers shall be in accordance with ASTM A48, Class 30, and as listed by the following manufacturers, or equal:

Syracuse Castings:	24-inch Nominal Casting No. 1255-B
Neenah Castings:	24-inch Nominal Casting No. R-1780

2. Covers shall be provided with a minimum of two watertight pickholes and shall be solid unless otherwise noted. Frames and covers shall be adequate to bear H-25 wheel loads and shall be provided with machined bearing surfaces. Lettering shall be either "Sanitary Sewer" or "Storm Sewer", depending on the use, or other appropriate designation cast as directed.

3. When required for bolting the frame to the manhole, holes shall be provided in the frames. Contractor shall submit to Engineer a cover and frame that meets this requirement.

D. Mortar and Bricks

1. Masonry cement for mortar shall meet the requirements of ASTM C91, Type II and shall be mixed with a graded quality sand conforming to ASTM C144. Mix shall be one part masonry cement to three parts sand using the minimum amount of clean water required for workability.
2. Brick shall meet the requirements of ASTM C62, Grade SW, and shall be of a hard-burned manufacture.

E. Coatings

1. The exterior and interior surfaces of the precast concrete manholes shall be waterproofed with two (2) coats of of Koopers 300M or equal 8 mils each for a total DFT of 16 mils.

PART 3 EXECUTION

3.1 INSTALLATION

A. Precast manhole bases shall be installed level on a flat stable subgrade. Where an unstable condition exists, the Contractor shall excavate the unstable material and replace with compacted granular material. B. All joints of the manhole shall be filled inside and out with mortar to provide a smooth and continuous surface.

C. Manhole inverts shall be lined with a half section of pipe of the same type and size as the pipe used for the pipeline or shall be constructed of Class C concrete, shaped and troweled to produce a smooth circular cross-section. Benchwalls shall have a slope of ½” on 12 inch and the mortar surface shall be given a broom finish.

D. Mortar beds for brick or manhole frames shall be a maximum thickness of ☐nch.

3.2 FIELD TESTING

A. Perform leakage tests in accordance with the applicable provisions of the Section entitled "Leakage Tests".

* * * * *

SECTION 03306

CONCRETE FOR SITE WORK

PART 1 GENERAL

1.1 SUMMARY

A. This Section includes cast-in-place concrete used in the construction of pipelines and appurtenances including cradles, encasements, thrust blocks, anchors, and manholes; cast-in-place concrete used in the construction of sidewalks, gutters, curbs and other items of restoration; and reinforcing steel, formwork, and items of concrete accessories required for the completion of the work.

1.2 REFERENCES

A. Materials and installation shall be in accordance with the latest revisions of the following codes, standards and specifications, except where more stringent requirements have been specified herein:

1. American Society for Testing and Materials (ASTM)

2. American Concrete Institute (ACI)

1.3 SUBMITTALS

A. The following items shall be submitted:

1. Name and location of concrete supplier.

2. Concrete mix design indicating amount of all ingredients for each class of concrete to be used in the work.

3. Manufacturer's literature for curing compounds, joint materials, admixtures, etc.

PART 2 PRODUCTS

2.1 MATERIALS

A. Cement

1. Cement shall conform to ASTM C150, Type I/II.

2. Type III may be employed with the Engineer's acceptance.

B. Fine and Coarse Aggregates

1. Aggregates shall comply in all respects to ASTM C33.

2. Maximum size of coarse aggregate:

a. General concrete – 1½ inches
b. Sidewalks, curbs and gutters ¾ inches

3. Coarse aggregate for concrete used for sidewalks, curbs, and gutters shall be crushed stone or approved equal.

C. Water

1. Water shall be obtained from the public potable water supply and shall be clear and free from injurious substances.

D. Admixtures

1. Water reducing admixtures shall conform to ASTM C 494, Type A.

2. Air-entraining admixtures shall conform to ASTM C260.

E. Reinforcing steel bars shall be deformed new billet steel conforming to ASTM A615, Grade 60. Wire fabric shall be cold drawn steel conforming to ASTM A185.

F. Expansion joint material shall be resilient and nonextruding type premolded bituminous impregnated fiberboard, 1/2-inch thickness and of the width required for full depth joints.

G. Membrane curing compound shall be pigmented and conform to the requirements of ASTM C309.

H. Grout

1. Grout shall be non-shrink, non-metallic, non-gas forming, preblended and ready for use requiring only the addition of water.

PART 3 EXECUTION

3.1 MIX DESIGN

A. Mix design shall be established by the concrete supplier based on a proven strength record for concrete made with similar ingredients.

B. Mix designs shall conform to ACI 211, except as specified herein, using approved materials.

C. The various classes of concrete are designated as follows:

Design Compressive Strength at 28 Day psi	Maximum Water / Cement Ratio by Weight	Minimum Lbs. of Cement Per Cu. Yd
4000 psi air-entrained	0.44	564
3000 psi	0.64	470

D. Maximum Slump

1. General - 4 inches

2. Sidewalks, curbs and gutters - 3 inches

3. Use minimum water possible subject to workability.

E. Except where otherwise specified, all concrete exposed to the weather, or in contact with sewage shall be air-entrained in the range of 5% to 7%.

3.2 BATCHING AND MIXING

A. Batching

1. The Contractor shall have at his disposal a modern and dependable batch plant within a reasonable distance from the work.

2. Batching shall conform to ACI 304.

3. Use only approved materials.

B. Mixing and Delivery

1. Mixing and delivery shall conform to ASTM C94.

3.3 PLACING CONCRETE

A. Placing shall conform to ACI 304.

B. Forms shall be substantially free from surface defects and sufficiently tight to prevent leakage of mortar. They shall be properly braced and tied so as to maintain position and shape during and after placing of concrete.

C. The Contractor shall build into the concrete reinforcing steel, sleeves, waterstops, etc., as shown on the Contract Drawings. The Contractor shall repair or replace existing structures, utilities, sidewalks, pavement and any other items that have been removed, destroyed, or damaged during the execution of this construction project.

D. Concrete shall be thoroughly consolidated by the use of vibrators or by spading or puddling sticks and tampers.

E. Concrete shall not be deposited under water without written permission of the Engineer and then only in accordance with proper tremie techniques.

F. Cold weather concreting shall conform to ACI 306.

G. Hot weather concreting shall conform to ACI 305.

3.4 FINISHING

A. Formed concrete surfaces to be exposed shall be given a rubbed finish. In the case of restoration, the rubbed finish shall be equal to that of the concrete surface being replaced.

B. Inverts, benchwalls, floors or structures and similar surfaces shall be given a float finish.

C. Sidewalks shall be hand floated using a magnesium float and given a broom finish perpendicular to traffic, edges of slabs to be tooled.

3.5 CURING

A. Concrete shall be maintained in a moist condition for seven days using methods that will induce complete and continuous saturation.

B. Sidewalks, curbs and gutters may be cured by the use of a pigmented membrane curing compound applied in accordance with the manufacturer's directions.

3.6 NON-SHRINK GROUTING

A. For openings that are left in new concrete or where made in existing concrete for the insertion of wall castings, pipes or other fixtures, the space around these items shall be made watertight by completely filling with a non-shrink grout unless another means is specified elsewhere in the Contract Documents.

B. Work shall be done in strict accordance with the manufacturer's recommendations.

3.7 QUALITY CONTROL

A. The Contractor shall be solely responsible for the quality control of all concrete.

B. Concrete which does not meet the requirements of these specifications may be rejected by the Owner’s Representative.

* * * * *

SECTION 11300

PACKAGED SUBMERSIBLE BACKWASH PUMPING STATION

PART 1 GENERAL

1.1 WORK SPECIFIED

A. Work under this section includes, but is not limited to furnishing and installing submersible non-clog wastewater pumps, discharge connection elbows, guide bar brackets, access frames and covers, control panels, level controls, and all appurtenances as indicated on the Contract Drawings, as herein specified, or as needed for complete operating system.

B. Submersible non-clog wastewater pumps shall be capable of passing 3-inch diameter spherical solids and quantities of grit. Pumps shall be the products of a single manufacturer to provide for interchangeability and standardization of spare parts.

1.2 RELATED WORK DESCRIBED ELSEWHERE

A. Tests on Pumping Equipment

1.3 ACCEPTABLE MANUFACTURER

A. Flygt Corporation or equal

1.4 PERFORMANCE CRITERIA

A. Pump Characteristics

Liquid pumped	Backwash
Type	Submersible non-clog
Number of Pumps	3
Discharge Size	10-inch
Service	Heavy Duty
Model Number	NP 3315.180 MT by Flygt
Impeller Diameter	385 mm
Motor HP rating	110
Maximum Input Power, kw	110 Kw
Combined Pump & motor Eff.	65%
Speed	1185 rpm, equipped with Variable Frequency Drives
Type	squirrel cage, shell-type, submersible
Power Requirements	460V, 60 Hz, 3-phase
Classification	Explosion-Proof, Class I, Division 1, Group D

Performance at 1755 rpm

Discharge (gpm)	Total Head (ft)
0	125
1000	110
2000	95
3000	82
4000	65

Design Point 3250 gpm @ 78 feet TDH

1.5 UTILITY POWER REQUIREMENTS

A. Site power furnished to pump station shall be 3 phase, 60 hertz, 480 volts, maintained within industry standards. Voltage tolerance shall be plus or minus 10 percent. Phase-to-phase unbalance shall not exceed 1% average voltage as set forth in NEMA Standard MG-1. Control voltage shall not exceed 132 volts.

1.6 REPAIR/SERVICE FACILITY

A. An authorized repair service facility shall be maintained by the manufacturer within a nominal distance of 150 miles from the installation.

B. The location of this facility shall be included on a list of similar facilities in published form; the list shall include the facility address, telephone number, and names of qualified personnel.

C. Manufacturer's Start-up Services

1. The manufacturer or authorized representative shall provide qualified personnel to inspect the completed installation, assist the contractor with start-up, and instruct operating personnel in the proper care, operation, and maintenance of the equipment.

1.7 SUBMITTALS

A. Product Data

1. Shop drawings

2. Submittal shall include shop drawings, electrical ladder logic drawings, and support data as follows: Catalog cuts sheets reflecting characteristics for major items of equipment; materials of construction; major dimensions; and pump characteristic curves showing the design duty point capacity (GPM), head (FT), motor and brake horsepower, pump efficiency, speed, and NPSH required. Electrical components used in the motor branch and liquid level control shall be fully described.

3. After fabrication, the pump station manufacturer shall submit 6 copies of other data including: report of factory testing, technical manuals, and special tools.

B. Shop Drawings

1. Shop drawings shall provide layout of pumps, certified pump curve, control panel wiring, access cover and appurtenances. Pipe penetrations and station access clearances shall be dimensioned relative to the station centerline. The electrical ladder logic drawings shall illustrate motor branch and liquid level control circuits to extent necessary to validate function and integration of circuits to form a complete working system. Include Repair/Service Facility information.

C. Operation and Maintenance Manuals

1. Operation shall be in accordance with written instructions provided by the pump system manufacturer. Comprehensive instructions supplied at time of shipment shall enable personnel to properly operate and maintain all equipment supplied. Content and instructions shall assume operating personnel are familiar with pumps, motors, piping and valves, but lack experience on exact equipment supplied.

2. Documentation shall be specific to the pump system supplied and collated in functional sections. Each section shall combine to form a complete system manual covering all aspects of equipment supplied by the pump manufacturer. Support data for any equipment supplied by others, even if mounted or included in overall station design, shall be provided by those supplying the equipment. *Include accepted shop drawings in this manual*. Instructions shall include the following as a minimum:

   a. Functional description of each major component, complete with operating instructions.
   b. Instructions for operating pumps and pump controls in all modes of operation.
   c. Calibration and adjustment of equipment for initial start-up, after replacement of level control components, or as required for routine maintenance.
   d. Support data for commercially available components not produced by the pump manufacturer, but supplied in accordance with the specifications, shall be supported by literature from the prime manufacturer and incorporated as appendices.
   e. Electrical schematic diagram of the pump system circuits shall be in accordance with NFPA 70. Schematics shall illustrate, to the extent of authorized repair, pump motor branch, control and alarm system circuits including interconnections. Wire numbers and legend symbols shall be shown. Schematic diagrams for individual components, not normally repairable by the station operator, need not be included. Details for such parts shall not be substituted for an overall system schematic. Partial schematics, block diagrams, and simplified schematics shall not be provided in lieu of an overall system diagram.
   f. Mechanical layout drawing of the pump system and components, prepared in accordance with good commercial practice, shall provide installation dimensions and location of all pumps and motors.

3. Operation and maintenance instructions which rely on vendor cut-sheets and literature which include general configurations, or require operating personnel to selectively read portions of the manual shall not be acceptable. Operation and maintenance instructions must be specific to equipment supplied in accordance with these specifications.

1.8 QUALITY ASSURANCE

A. Manufacturers Qualifications

1. Upon request from the engineer, the pump system manufacturer shall prove financial stability and ability to produce the station within the specified delivery schedules. Evidence of facilities, equipment and expertise shall demonstrate the manufacturer's commitment to long term customer service and product support.

B. Factory System Test

1. All internal components including the pumps, motors, and integral controls shall be tested as a complete working system at the manufacturer's facility. Tests shall be conducted in accordance with Hydraulic Institute Standards at the specified head, capacity, rated speed and horsepower. Factory operational test shall simulate actual performance anticipated for the complete station. The operational test may be witnessed by the engineer, and/or representatives of his choice, at the manufacturer's facility. Refer to Technical Section titled “Tests on Pumping Equipment” for further requirements.

C. Testing

1. The pump manufacturer shall perform the following inspections and test on <u>each</u> pump before shipment from factory (A minimum of seven (7) equally spaced capacity points, including shutoff, design point, and minimum head and speed for which the pump is designed to operate, shall be used):

    a. Impeller, motor rating and electrical connections shall first be checked for compliance with specifications.
    b. Motor and cable insulation test for moisture content or insulation defects shall be made.
    c. Prior to submergence, the pump shall be run dry to establish correct rotation and mechanical integrity.
    d. The pump shall be run for 30 minute submerged.
    e. Amperage and voltage shall be recorded.
    f. After operational test d., the insulation test b. is to be performed again.
    g. A written report certifying the foregoing steps shall be supplied with each pump, including data under e. at the time of shipment.
    h. Immediately prior to shipment, each pump cable end shall be fitted with a shrink fit rubber boot or plastic dipped to protect the pump from water seepage that could occur on site before the electrical installation is completed.

1.9 MANUFACTURER'S WARRANTY

A. The pump manufacturer shall warrant the pumps being supplied to the Owner for a period of five years following installation date against defects in materials and workmanship. The manufacturer shall replace parts which shall become defective through normal use and wear on a progressive schedule of cost for the entire warranty period.

B. Parts covered under the warranty shall include the motor mechanical seals, impeller, pump housing and ball bearings.

C. The warranty shall be in published form and apply to all similar units.

D. The warranty shall not alleviate the Contractor’s obligations during the one year guarantee period.

PART 2 PRODUCTS

2.1 MANUFACTURER

A. The specifications and Contract Drawings depict equipment and materials manufactured by The Flygt Company. It is not intended, however, to eliminate other products of equal quality and performance.

B. In event the Contractor obtains engineer's acceptance for equipment substitution, the Contractor shall, at his own expense, make all resulting changes to the enclosures, piping or electrical systems as required to accommodate the proposed equipment. Revised detail drawings illustrating the substituted equipment shall be submitted to the engineer for review.

C. It will be assumed that if the cost to the contractor is less for the proposed substitution, then the contract price shall be reduced by an amount equal to the savings in accordance with the General Provisions section titled “changes”.

2.2 PUMPS AND APPURTENANCES

A. Pumping Station

1. Pumps shall be capable of handling unscreened backwash water with grit. The discharge connection elbow shall be permanently installed in the wet well along with the discharge piping; pumps shall be automatically connected to the discharge connection elbow when lowered into place, and shall be easily removed for inspection or service. Sealing of the pumping unit to the discharge connection elbow shall be accomplished by a simple linear downward motion of the pump. A sliding bracket shall be an integral part of the pumping unit. The entire weight of the pumping unit shall be guided by two guide bars and pressed tightly against the discharge connection elbow, for sealing of the discharge interface. No portion of the pump shall bear directly on the floor of the sump. The pump, with its appurtenances and cable, shall be capable of continuous submergence under water without loss of watertight integrity to a depth of 65 feet.

B. Materials of Construction

1. Major pump components shall be of gray cast iron, ASTM A-48, Class 35, with smooth surfaces devoid of blowholes and other irregularities. Where watertight sealing is required, O-rings made of nitrile rubber shall be used. All exposed nuts and bolts shall be of stainless steel 304 construction. All surfaces, coming into contact with sewage, other than stainless steel or bronze, shall be protected by an approved sewage resistant coating. Pump exteriors shall be sprayed with zinc phosphate primer and with polyester resin finish paint.

2. All mating surfaces where watertight sealing is required shall be such that sealing is accomplished by metal-to-metal contact between machine surfaces, resulting in controlled compression of nitrile rubber O-rings without the requirement of a specific torque limit to affect this. No secondary sealing compounds, rectangular gaskets, elliptical O-rings, grease or other devices shall be used.

C. Wearing Rings

1. A replaceable wear ring system shall be installed to provide sealing between the volute and the suction inlet of the impeller. The stationary wear ring shall consist of a ring made of brass, nitrile rubber molded with a steel ring insert, or stainless steel, which shall be fitted to the volute inlet.

D. Impeller

1. The impeller shall Flygt N-impeller with Hi-Chrome content ASTM A-532 (Alloy III A) 25% chrome gray cast iron, ASTM A-48, Class 35, dynamically balanced, double shrouded non-clogging design with a long throulet without acute turns, capable of handling solids, fibrous materials, heavy sludge and other matter found in normal sewage applications. The impeller shall be closed design, single vane, and non-clog. The pump manufacturer shall, upon request, furnish mass moment of inertia data for the proposed impeller.

E. Shaft/Rotor Assembly

1. The shaft/rotor assembly must be of rigid design such that its critical speed is safely above the maximum operating speed of the pump. The shaft shall be fabricated in one piece and the securing arrangement shall facilitate impeller connection. Shaft materials for pumps 20 HP and smaller shall be ANSI 420 stainless steel.

F. Bearings

1. The pump shaft shall rotate on two (2) permanently lubricated bearings. The upper bearing shall be a single deep groove row of ball bearings and the lower bearing a single row angular contact ball bearing.

G. Shaft Sealing System

1. Each pump shall be provided with the upper seal shaft system running in an oil chamber which shall include an equalizing device for oil chamber which shall include an equalizing device for oil pressure compensation and provision for determining the condition of the lower seal unit without disassembly of the pump. The lower seal unit shall contain one stationary and one positively driven rotating tungsten-carbide ring. The upper seal unit shall contain on stationary ceramic ring and one positively driven rotating carbon ring.

2. Each interface shall be held in contact by its own spring system. Seals shall require neither maintenance nor adjustment and shall be easily replaceable.

3. Seals without positively driven rotating members or conventional double mechanical seals with a common spring acting between the upper and lower units, requiring a pressure differential to effect sealing, will not be considered equal to the system described and will not be allowed.

H. Motors

1. Motors supplied for application with submersible pumps shall be specifically designed to drive the units. They shall be non-overloading within the pumping range shown on the head/capacity curve for the specific pump impeller utilized. Motors shall be guaranteed to operate continuously in a totally non-submerged condition without damage while pumping under load.

2. Design

a. All motors shall be of the Definite Purpose type, unless specified otherwise in the applicable "Design Criteria" subsection, and shall be shell-type, submersible, air-filled or oil filled, squirrel-cage induction motors.
b. All motors shall have Class F insulation capable of resisting a maximum operating temperature of 155°C under full load in a submerged condition.
c. All motors shall be provided with an adequate cooling system.
d. All cable inside pump wet or dry wells shall be double jacketed extra heavy type "SO" Power Cord with ground conductor of sufficient length as to eliminate splices. The jackets of all cords shall be an oil and chemical resistant chlorosulfanated polyethylene (hypalon) and shall be of double pass construction with a nylon reinforcing braid between passes suitable for submergence in raw sewage. This cable shall be in accordance with ICEA standards. Cable power, control and ground conductor sizes shall be as shown on the Contract Drawings.
e. Electrical cable entry water seal design shall insure a watertight and submersible seal, without specific torque requirements. It shall be comprised of a single cylindrical ealastomer grommet flanked by washers, all having a close tolerance fit against the outside of the cable. The cable shall be compressed by the entry inside diameter with a strain relief function separate from the sealing function. The assembly

shall bear against a shoulder in the pump top. Epoxies, silicones, or other secondary sealing systems shall not be acceptable.

f. Performance-The motors shall be capable of supplying the maximum rated horsepower and rpm at the conditions and within the ranges (if applicable) specified.

I. Shop Painting

1. Shop painting shall be in accordance with the manufacturer's standard specifications.

J. Submersible Pumping Station Control Panel

1. Submersible pumping station control panel shall be as shown on the electrical drawings.

K. Auxiliary Equipment

1. Integral pump thermal sensors and pump leakage sensors shall be provided for additional motor protection through interconnection with the control panel. A leak detection module shall be provided for interfacing leakage sensor with pump controls. Module shall operate at 120 VAC and provide a voltage-free contact actuating upon detection of a leak.

L. Access Frames and Covers

1. General

There shall be furnished and installed access frames complete with hinged and hasp equipped covers with level sensor cable holders. Each cover door shall have a safety handle to maintain the door in open position; doors shall be of checkered plate design.

2. Design Criteria

Number of Covers	3
Size	as recommended by the pump manufacturer
Material	Aluminum
Loading	Construction shall be heavy duty H20 wheel loading.

M. Liquid Level Sensors

1. Furnish and install non-mercury type liquid level sensors and transducer as shown, with sufficient electrical cable without splices. The sensors shall be of the non-floating displacement type and shall be utilized in an intrinsically safe circuit design.

N. Mix Flush Valve

1. Provide Flygt mix flush valve for one pump.

PART 3 EXECUTION

3.1 EXAMINATION

A. Contractor shall off-load equipment at installation site using equipment of sufficient size and design to prevent injury or damage. Manufacture shall provide written instruction for proper handling. Immediately after off-loading, contractor shall inspect complete pump station and appurtenances for shipping damage or missing parts. Any damage or discrepancy shall be noted in written claim with shipper prior to accepting delivery. Validate all station serial numbers and parts lists with shipping documentation. Notify the manufacturers representative of any unacceptable conditions noted with shipper. Any components damaged while on-site shall be repaired or replaced (as determined by the Engineer), at Contractor's expense.

3.2 INSTALLATION

A. General

1. Pump installation shall be done in accordance with the manufacturers' written installation instructions and testing shall be done in accordance with the Section entitled "Tests on Pumping Equipment".

B. Spare Parts

1. The Contractor shall supply the following spare parts:

a. One set of wearing rings for each pump
b. One set of special tools required for maintenance of pumps
c. One complete set of shaft seals for each pump
d. One spare level sensor

3.3 FIELD QUALITY CONTROL

A. Operational Test

1. Prior to acceptance by owner, an operational test of all pumps, drives, and control devices shall be conducted to determine if the installed equipment meets the purpose and intent of the specifications. Tests shall demonstrate that all equipment is electrically, mechanically, structurally, and otherwise acceptable; it is safe and in optimum working condition; and conforms to the specified operating characteristics.

2. After construction debris and foreign material has been removed form the wet well, contractor shall supply clear water volume adequate to operate station through several pumping cycles. Observe and record operation of pumps, suction and discharge gauge readings, ampere draw and pump controls. Be alert to any undue noise, vibration or other operational problems.

B. Manufacturers Start-up Services

1. Co-ordinate station start-up with manufactures technical representative.

2. The manufacturer's representative or factory service technician shall inspect and approve the completed installation, prior to start-up, calibrate and adjust instrumentation, correct or supervise correction of defects or malfunctions, and instruct operating personnel in proper operation and maintenance procedures.

3.4 CLEANING

A. Prior to acceptance, inspect interior and exterior of pump system for dirt, splashed material or damaged paint. Clean or repair accordingly. Remove from the job site all tools, surplus materials, scrap and debris.

3.5 PROTECTION

A. The pump system should be placed into service immediately. If operation is delayed, drain water from pumps and piping. Open motor circuit breakers and protect station controls and interior equipment from cold and moisture.

* * * * *

SECTION 11390

TESTS ON PUMPING EQUIPMENT

PART 1 GENERAL

1.1 SUMMARY

A. This Section includes requirements for shop hydrostatic testing, shop performance testing, shop mechanical testing, and field running testing for each pump provided, unless otherwise specified.

1.2 REFERENCES

A. Testing shall be in accordance with the latest revisions of the following codes, standards and specifications, except where more stringent requirements have been specified herein:

1. Hydraulic Institute Standards (HIS)

1.3 SUBMITTALS

A. The following items shall be submitted:

1. Shop hydrostatic test results, for each pump tested.

2. Shop performance test results, in the form of performance curves certified as to actual test date and witness, for each pump tested.

PART 2 PRODUCTS

2.1 GENERAL

A. Model Test for Performance will be allowed.

B. Shop testing will not be witnessed by the Engineer.

2.2 TEST EQUIPMENT

A. Manufacturer shall furnish materials and equipment including drives required to perform shop test.

B. Contractor shall furnish materials and equipment required to perform field test.

PART 3 EXECUTION

3.1 SHOP HYDROSTATIC TEST

A. Hydrostatic pressure test shall be at a pressure equal to (not less than twice the specified shut-off head.

B. The casings and heads shall show no:

1. Undue deflection

2. Sign of weakness

3. Sweating through porous metal

4. Leakage

3.2 SHOP PERFORMANCE TEST

A. Each pump shall be tested at maximum rated speed over a range of operating conditions to develop its performance curves for:

1. Head-capacity

2. Power input (BHP)

3. Efficiency

B. Test shall be conducted by the Contractor and the manufacturer's representative and witnessed by the Engineer, and shall demonstrate the following under operating conditions:

1. Pump has been properly installed and has no mechanical defects.

2. Pump is in proper alignment and has been properly connected.

3. Pump is free from undue vibration over the full range of operating conditions.

4. Pump is free from overloading and overheating.

C. Power for testing will be provided by the Owner.

3.3 FIELD RUNNING TEST

A. Each pump assembly with its drive unit and auxiliary equipment shall be field tested after installation.

B. Test shall not be started on any pump assembly until a manufacturer's representative is present and has completed the inspection for proper assembly, erection and alignment.

1. Manufacturer's representative shall supply certification of installation.

C. Test shall be conducted by the Contractor and the manufacturer's representative and witnessed by the Engineer, and shall demonstrate the following under operating conditions:

1. Pump has been properly installed and has no mechanical defects.

2. Pump is in proper alignment and has been properly connected.

3. Pump is free from undue vibration over the full range of operating conditions.

4. Pump is free from overloading and overheating.

*D. Power for testing will be provided by the Owner.

3.4 ACCEPTANCE

A. Acceptance of hydraulic performance shall depend upon satisfactory shop performance test as demonstrated by certified performance curves.

B. Final acceptance of each pumping unit shall depend upon satisfactory operation as demonstrated by the field running test and operation under field conditions.

C. Prior to final acceptance the Contractor shall correct all deficiencies.

3.5 FINAL ALIGNMENT

A. All installations - after 24 hours of operation the alignment of the unit shall be checked and adjusted as required.

B. Horizontal drive/pump installations - after one (1) week of operation, the connection coupling halves shall be given a final check for misalignment caused by pipe or temperature strains. If the alignment is correct, both the pump and driver shall be dowelled to the base plate, in accordance with the manufactures installation instructions.

* * * * *

SECTION 15100

GATE VALVES 3 INCHES AND LARGER

PART 1 GENERAL

1.1 SUMMARY

A. This Section includes gate valves 3 inches and larger for all services specified or shown on the Contract Drawings, exposed or in the ground, complete with accessories.

B. Double-disc valves shall be installed, unless otherwise specified or shown.

C. Certain features of gate valves shall be as scheduled.

1.2 REFERENCES

A. Materials and installation shall be in accordance with the latest revisions of the following codes, standards and specifications, except where more stringent requirements have been specified herein:

1. American Water Works Association (AWWA)

1.3 SUBMITTALS

A. In addition to those submittals identified in the General Provisions, the following items shall be submitted:

1. Manufacturer’s certification that all materials furnished are in compliance with the applicable requirements of the referenced standards and this specification.

PART 2 PRODUCTS

2.1 GENERAL

A. Double-disc gate valves shall be in accordance with the requirements of AWWA C500.

B. Resilient seated gate valves shall be in accordance with the requirements of AWWA C509.

C. Gate valves 12 inches and smaller with specified working pressure of 50 psi to 200 psi and 16 inches and larger with specified working pressure of 50 psi to 150 psi shall conform to the requirements of AWWA Standards. Gate valves of sizes or pressure classes outside of the above ranges shall conform to manufacturer's standards with materials and construction conforming to the AWWA Standards as applicable.

D. Unless otherwise scheduled or shown on the Contract Drawings, gate valves shall be:

a. Non-rising stem
b. Dual O-ring stem seal
c. Counterclockwise direction of opening

E. Gate valves larger than 12 inches installed horizontally in a horizontal pipeline shall be equipped with bronze rollers, non-corrodible tracks, and bronze scrapers.

F. Bronze Grade B or C shall not be used in valve construction.

G. Valve Joints

1. Where the joint type is not scheduled or shown, joints shall conform to the type of pipe joint at the point of installation.

H. All hardware (nuts, bolts, and similar) shall be stainless steel.

2.2 ACCESSORIES

A. Gearing

1. Gearing as scheduled shall be installed on all gate valves larger than 12 inches.

2. Gear ratios shall conform to AWWA Standards.

3. Gear cases on valves installed in the ground shall be of the extended type and stem seal shall be protected by a shield to prevent contact of these parts with soil.

4. Exposed non-rising stem valves with gearing shall have position indicators, unless otherwise scheduled.

B. Bypass- NOT USED

C. Operators

1. Valves installed in the ground shall be fitted with standard wrench nuts.

2. Valves installed exposed shall be fitted with handwheel, floorstand, motor operator, hydraulic or other operator as scheduled.

3. Valves installed greater than 5 feet above an operating floor, without specified operator, shall have a chainwheel operator with chain extending to 4 feet above the operating level and hook to clips arranged to clear walking aisles.

4. Operators shall be supplied with a cast arrow showing the direction of valve opening.

D. Extension Stems

1. Valves scheduled or shown and valves installed in the ground with the operating nut greater than 4 feet below the finished grade shall have extension stems.

2. Valves in the ground shall have the stems extended to within 3 feet of the finished grade.

a. A centering device shall be installed on the extension stem just below the extended operating nut.

E. Valve Boxes

1. Valves installed in the ground shall be equipped with an adjustable type valve box.

2. The valve box shall have a barrel not less than 5 inches in diameter and with a base to fit the valve on which it is to be installed.

3. The valve box cover shall indicate by means of a cast arrow the direction of valve opening.

4. Where applicable, the word "Water" or "Sewer" shall be cast in the valve box cover.

PART 3 EXECUTION

3.1 INSTALLATION

A. Install valves in accordance with the configuration shown on the Contract Drawings.

B. Support valves independently from equipment and pipelines, on supports acceptable to the Engineer.

3.2 FIELD TESTING

A. Upon completion of installation, operate all valves to demonstrate that they operate without binding or strain.

B. Correct any deficiencies in the valves or the installation.

3.3 PAINTING

A. Valves shall be shop coated with asphalt varnish in accordance with AWWA Standards.

B. Valves to be field painted or coated shall have the same paint or coating as the pipeline in which they are installed.

C. Prior to applying a paint or coating valves shall have applied a minimum of one coat of Inertol "tar stop", or equal, to cover the asphalt varnish shop coating.

* * * * *

SECTION 03 30 00

CAST-IN-PLACE CONCRETE

PART 1 - GENERAL

1.1 SUMMARY

A. This Section specifies cast-in place concrete, including formwork, reinforcement, concrete materials, waterstops, mixture design, placement procedures, and finishes, for the following:

1. Footings and piers
2. Foundation walls.
3. Slabs-on-grade.
4. Grade beams

1.2 REFERENCES

A. Materials and installation shall be in accordance with the latest revisions of the following codes, standards and specifications (Contractor shall provide copies of all documents on-site), except where more stringent requirements are specified herein:

1. American Concrete Institute (ACI)
   a. ACI 117 – Specifications for Tolerances for Concrete Construction and Materials.
   b. ACI 211.1 – Standard Practice for Selecting Proportions for Normal, Heavyweight and Mass Concrete.
   c. ACI 301 – Specification for Structural Concrete.
   d. ACI 302 – Guide for Concrete Floor and Slab Construction.
   e. ACI 304 – Guide for Measuring, Mixing, Transporting and Placing Concrete.
   f. ACI 305R - Hot Weather Concreting.
   g. ACI 306R - Cold Weather Concreting.
   h. ACI 308 - Standard Practice for Curing Concrete.
   i. ACI 315 - Details and Detailing of Concrete Reinforcement
   j. ACI 318 - Building Code Requirements for Structural Concrete.
   k. ACI 350 – Environmental Engineering Concrete Structures.
   l. ACI 350.1 and 350.1R – Tightness Testing of Environmental Engineering Concrete Structures and Commentary.
   m. ACI 350.3R – Seismic Design of Liquid Containing Concrete Structures and Commentary.

2. American Society for Testing and Materials (ASTM)
   a. ASTM A615 - Deformed and Plain Billet Steel for Concrete Reinforcement.
   b. ASTM C33 - Concrete Aggregates.
   c. ASTM C94 - Ready-Mixed Concrete.
   d. ASTM C150 - Portland Cement.
   e. ASTM C260 - Air Entraining Admixtures for Concrete.

f. ASTM C309 - Liquid membrane-forming compounds for curing concrete
g. ASTM C494 - Chemical Admixtures for Concrete.
h. ASTM C1116 - Standard Specification for Fiber-Reinforced Concrete and Shotcrete

3. Concrete Reinforcing Steel Institute (CRSI)
   a. Manual of Standard Practice.
   b. Design Handbook.

4. Building Code of New York State (BCNYS), 2007

1.3 DEFINITIONS

A. Cementitious Materials: Portland cement alone or in combination with one or more of the following: blended hydraulic cement, fly ash and other pozzolans, ground granulated blast-furnace slag, and silica fume; subject to compliance with requirements.

1.4 SUBMITTALS

A. Scheduling: Submit concrete placement schedule before start of placement operations. Include locations of all joints including construction joints.

B. Product data for each type of manufactured material and product indicated, including reinforcement and forming accessories, admixtures, patching compounds, waterstops, joint systems, dry-shake finish materials, fiber reinforcement, curing materials, floor and slab treatments, bonding agents and others, if requested by Owner's Representative.

C. Written mix design shall be based on field experience or trial mixture. Submit documentation for each type of concrete in accordance with ACI 301, Section 4.

   1. Indicate amounts of mixing water to be withheld for later addition at Project site.

D. Laboratory test reports for concrete materials and mix designs.

E. Shop drawings for detailing, fabricating, bending, and placing concrete reinforcement. Comply with ACI 315 "Manual of Standard Practice for Detailing Reinforced Concrete Structures" showing bar schedules, stirrup spacing, bent bar diagrams, arrangement, and support of concrete reinforcement. Include special reinforcing required for openings through concrete structures.

F. Proposed method of concrete curing.

1.5 QUALITY ASSURANCE

A. Manufacturer Qualifications: A firm experienced in manufacturing ready-mixed concrete products and that complies with ASTM C 94/C 94M requirements for production facilities and equipment.

1. Manufacturer certified according to NRMCA's "Certification of Ready Mixed Concrete Production Facilities."

B. Testing Agency Qualifications: An independent agency qualified according to ASTM C 1077 and ASTM E 329 for testing indicated, as documented according to ASTM E 548.

1. Personnel conducting field tests shall be qualified as ACI Concrete Field Testing Technician, Grade 1, according to ACI CP-01 or an equivalent certification program.
2. Personnel performing laboratory tests shall be an ACI-certified Concrete Strength Testing Technician and Concrete Laboratory Testing Technician - Grade I. Testing Agency laboratory supervisor shall be an ACI-certified Concrete Laboratory Testing Technician - Grade II.

C. ACI Publications: Comply with the following unless modified by requirements in the Contract Documents:

1. ACI 301, "Specification for Structural Concrete".

D. Concrete Testing Service: Engage a qualified independent testing agency to perform material evaluation tests.

E. Pre-installation Conference: Conduct conference at Project site to comply with requirements in Division 01 Section "Project Management and Coordination."

1. Before submitting design mixtures, review concrete design mixture and examine procedures for ensuring quality of concrete materials. Require representatives of each entity directly concerned with cast-in-place concrete to attend, including the following:
   a. Contractor's superintendent.
   b. Independent testing agency responsible for concrete design mixtures.
   c. Ready-mix concrete manufacturer.
   d. Cast-in-place concrete subcontractor.
2. Review concrete finishes and finishing, cold- and hot-weather concreting procedures, curing procedures, construction joints, forms and form-removal limitations, reinforcement accessory installation, concrete repair procedures, and protection of cast-in-place concrete.

F. Qualifications

1. Testing Firm Qualifications: An independent firm, with experience and capability to conduct specified tests, and is a NRTL as defined by OSHA in 19 CFR 1910.7.
2. Testing Firm’s Field Supervisor Qualifications: person currently certified by NETA or NICET to supervise on-site testing specified in Part 3.

G. Materials and installed work may require testing and retesting at any time during progress of Work. Tests, including retesting of rejected materials for installed Work, shall be done at Contractor's expense.

1.6 DELIVERY, STORAGE AND HANDLING

A. Deliver, store, and handle steel reinforcement to prevent bending and damage.

B. Store waterstops under cover to protect from moisture, sunlight, dirt, oil, and other contaminants.

PART 2 - PRODUCTS

2.1 FORM-FACING MATERIALS

A. Form-Facing Panels for As-Cast Exposed Finishes: plywood, metal, metal-framed plywood faced, or other acceptable panel-type materials to provide continuous, straight, smooth, exposed surfaces. Furnish in largest practicable sizes to minimize number of joints and to conform to joint system shown on drawings.

B. Forms for Cylindrical Columns, Pedestals, and Supports: Metal, glass-fiber-reinforced plastic, paper, or fiber tubes that will provide surfaces with gradual or abrupt irregularities not exceeding specified formwork surface class. Provide units with sufficient wall thickness to resist plastic concrete loads without detrimental deformation.

C. Pan-Type Forms: Glass-fiber-reinforced plastic or formed steel, stiffened to resist plastic concrete loads without detrimental deformation.

D. Form Liners: Units of face design, texture, arrangement, and configuration indicated. Furnish with manufacturer's recommended liquid-release agent that will not bond with, stain, or adversely affect concrete surfaces and will not impair subsequent surface treatments of concrete.

E. Chamfer Strips: Metal, rigid plastic, elastomeric rubber, or dressed wood, 3/4 by 3/4 inch, minimum; non-staining; in longest practicable lengths.

F. Form Joint Tape: Compressible foam tape; pressure sensitive; AAMA 800, "Specification 810.1, Expanded Cellular Glazing Tape"; minimum 1/4 inch thick.

G. Form Joint Sealant: Elastomeric sealant complying with ASTM C 920, Type M or S, Grade NS that adheres to form joint substrates.

H. Sealer: Penetrating, clear, polyurethane wood form sealer formulated to reduce absorption of bleed water and prevent migration of set-retarding chemicals from wood.

I. Form-Release Agent: Commercially formulated colorless form-release agent that will not bond with, stain, or adversely affect concrete surfaces and will not impair subsequent treatments of those surfaces.

1. Formulate form-release agent with rust inhibitor for steel form-facing materials.

J. Surface Retarder: Chemical liquid set retarder, for application on form-facing materials, capable of temporarily delaying final hardening of newly placed concrete surface to depth of reveal specified.

K. Form Ties: Factory-fabricated ties designed to resist lateral pressure of fresh concrete on forms and to prevent spalling of concrete on removal.

1. Furnish ties that, when removed, will leave holes 1 inch in diameter on concrete surface.
2. Furnish internally disconnecting ties that will leave no metal closer than 1-1/2 inches from the concrete surface.
3. Furnish ties with integral water-barrier plates to walls that are designed to retain water.

2.2 CONCRETE MATERIALS

A. Cementitious Material: Use the following cementitious materials, of the same type, brand, and source, throughout Project:

1. Portland Cement: ASTM C 150, Type I/II, gray. Supplement with the following:
   a. Fly Ash: ASTM C 618, Class C.
   b. Ground Granulated Blast-Furnace Slag: ASTM C 989, Grade 100 or 120.
   c. Silica Fume: ASTM C 1240, amorphous silica.

B. Normal-Weight Aggregates: ASTM C 33, Class 5M coarse aggregate or better, graded. Provide aggregates from a single source.

1. Maximum Coarse Aggregate Size: 1 inch.

C. Normal-Weight Fine Aggregate: ASTM C 33, manufactured or natural sand, from same source for entire Project.

D. Water: Potable, complying with ASTM C 94/C 94M except free of wash water from mixer washout operations.

2.3 ADMIXTURES

A. Air-Entraining Admixture: ASTM C 260.

B. Chemical Admixtures: Provide admixtures certified by manufacturer to be compatible with other admixtures and that will not contribute water-soluble chloride ions exceeding those permitted in hardened concrete. Do not use calcium chloride or admixtures containing calcium chloride.

1. Water-Reducing Admixture: ASTM C 494/C 494M, Type A.
2. Retarding Admixture: ASTM C 494/C 494M, Type B.

3. Accelerating Admixture: ASTM C 494/C 494M, Type C.
4. Water-Reducing and Retarding Admixture: ASTM C 494/C 494M, Type D.
5. Water-Reducing and Accelerating Admixture: ASTM C494/C 494M, Type E.
6. High-Range, Water-Reducing Admixture: ASTM C 494/C 494M, Type F.
7. High-Range, Water-Reducing and Retarding Admixture: ASTM C 494/C 494M, Type G.
8. Plasticizing and Retarding Admixture: ASTM C 1017/C 1017M, Type II.
9. Crystalline waterproofing admixture shall meet the following requirements:
   a. Permeability: concrete treated with admixture shall resist a water pressure of 150 psi with no measurable leakage.

2.4 CURING MATERIALS

A. Absorptive Cover: AASHTO M 182, Class 2, burlap cloth made from jute or kenaf, weighing approximately 9 oz./sq. yd. when dry.

B. Moisture-Retaining Cover: ASTM C 171, polyethylene film or white burlap-polyethylene sheet.

C. Waterborne, Membrane-Forming Curing Compound: ASTM C 309, Type 1, Class B.
   1. For concrete indicated to be sealed, curing compound shall be compatible with sealer.

2.5 REPAIR MATERIALS

A. Bonding Agent: ASTM C 1059, Type II, nonredispersible, acrylic emulsion or styrene butadiene.

B. Epoxy Bonding Adhesive: ASTM C 881, two-component epoxy resin, capable of humid curing and bonding to damp surfaces, of class suitable for application temperature and of grade to suit requirements.

2.6 CONCRETE MIXTURES

A. Prepare design mixtures for each type and strength of cast-in-place concrete proportioned on basis of laboratory trial mixture or field test data, or both, according to ACI 301.
   1. Use a qualified independent testing agency for preparing and reporting proposed design mixtures based on laboratory trial mixtures.

B. Proportion concrete mixtures as follows:

   1. Mix A - 4500-psi 28-day compressive strength; water-cement ratio 0.42 maximum; for use in all concrete exposed to water, wastewater or groundwater. Admixtures in the mix include air entraining and water reducing; crystalline waterproofing; a high-range water reducing admixture may be added if required to facilitate pumping.
   2. Mix B - 4000-psi 28-day compressive strength; water-cement ratio 0.45 maximum; for use in all other concrete work, unless noted otherwise. Admixtures

in the mix include air entraining, if used in exterior exposure, and water reducing; a high-range water reducer may be added if pumped.

3. Slump Limit: 8 inches for concrete with verified slump of 2 to 4 inches before adding high-range water-reducing admixture or plasticizing admixture, plus or minus 1 inch.
4. Air Content: 5-1/2 percent, plus or minus 1.5 percent at point of delivery for 1-1/2-inch nominal maximum aggregate size. Use air-entraining admixture for exterior exposed concrete.

C. Cementitious Materials: For cast-in-place concrete exposed to deicers, limit percentage, by weight, of cementitious materials other than portland cement according to ACI 301, 318 and 350 requirements. Use fly ash, ground granulated blast-furnace slag, and silica fume as needed to reduce the total amount of portland cement, which would otherwise be used, by not less than 40 percent.

D. Limit water-soluble, chloride-ion content in hardened concrete to 0.15 percent by weight of cement.

E. Admixtures: Use admixtures according to manufacturer's written instructions.

2.7 CONCRETE MIXING

A. Ready-Mixed Concrete: Measure, batch, mix, and deliver concrete according to ASTM C 94/C 94M and furnish batch ticket information.

1. Clean equipment used to mix and deliver cast-in-place concrete to prevent contamination from other concrete.
2. When air temperature is between 85 and 90 deg F, reduce mixing and delivery time from 1-1/2 hours to 75 minutes; when air temperature is above 90 deg F, reduce mixing and delivery time to 60 minutes.

2.8 STEEL REINFORCEMENT AND ACCESSORIES

A. Reinforcing bars shall be ASTM A615, Grade 60, deformed. Reinforcing bars to be welded shall be ASTM A706.

B. Recycled Content of Steel Products: Provide products with an average recycled content of steel products so postconsumer recycled content plus one-half of preconsumer recycled content is not less than 25 percent.

C. Bar Supports: Bolsters, chairs, spacers, and other devices for spacing, supporting, and fastening reinforcing bars in place; manufacture according to CRSI's "Manual of Standard Practice."

1. Where legs of wire bar supports contact forms, use CRSI Class 1, gray, plastic-protected bar supports.

2.9 FIBER REINFORCEMENT

A. Fiber reinforcement shall be as scheduled below as manufactured by Fibermesh®, or equal. Dosage rate shall be as specified by the manufacturer. Use in strict accordance with the manufacturer's instructions.

1. Fiber reinforcement for fiber-reinforced exterior slabs shall be Fibermesh® 300, or equal, applied at the application rate of 1.5 lbs. per cubic yard of concrete.
2. Fiber reinforcement for fiber-reinforced dry interior slabs shall be Fibermesh® 300, or equal, applied at the application rate of 1.5 lbs. per cubic yard of concrete.
3. Fiber reinforcement for fiber-reinforced submerged interior slabs shall be Novomesh® 950, or equal, applied at the application rate of 5.0 lbs. per cubic yard of concrete.
4. Fiber reinforcement for fiber-reinforced composite metal floor deck shall be Novomesh® 850, or equal, applied at the application rate of 24.0 lbs. per cubic yard of concrete.
5. Fiber reinforcement for fiber-reinforced submerged exterior concrete slabs, fillets and topping shall be Fibermesh® 300, or equal, applied at the application rate of 1.5 lbs. per cubic yard of concrete.

PART 3 - EXECUTION

3.1 FORMWORK

A. Limit deflection of form-facing panels to not exceed ACI 347 requirements.

B. In addition to ACI 347 limits on form-facing panel deflection, limit cast-in-place concrete surface irregularities, designated by ACI 347 as abrupt or gradual, as follows:

1. Class B, 1/4 inch.

C. Fabricate forms to result in cast-in-place concrete that complies with ACI 117, "Specifications for Tolerances for Concrete Construction and Materials."

D. Fabricate forms for easy removal without hammering or prying against concrete surfaces. Provide crush or wrecking plates where stripping may damage cast-in-place surfaces. Provide top forms for inclined surfaces steeper than 1.5 horizontal to 1 vertical.

1. Seal form joints and penetrations at form ties with form joint tape or form joint sealant to prevent cement paste leakage.
2. Do not use rust-stained steel form-facing material.

E. Provide temporary openings for cleanouts and inspection ports where interior area of formwork is inaccessible. Close openings with panels tightly fitted to forms and securely braced to prevent loss of concrete mortar. Locate temporary openings in forms at inconspicuous locations.

F. Chamfer exterior corners and edges of cast-in-place concrete.

G. Coat contact surfaces of wood rustications and chamfer strips with sealer before placing reinforcement, anchoring devices, and embedded items.

H. Form openings, chases, offsets, sinkages, keyways, reglets, blocking, screeds, and bulkheads required in the Work. Determine sizes and locations from trades providing such items.

I. Clean forms and adjacent surfaces to receive concrete. Remove chips, wood, sawdust, dirt, and other debris just before placing concrete.

J. Retighten forms and bracing before placing concrete, as required, to prevent mortar leaks and maintain proper alignment.

K. Coat contact surfaces of forms with form-release agent, according to manufacturer's written instructions, before placing reinforcement.

3.2 REINFORCEMENT AND INSERTS

A. Securely fasten steel reinforcement and wire ties against shifting during concrete placement.

B. Set wire ties with ends directed into concrete, not toward exposed concrete surfaces.

3.3 REMOVING AND REUSING FORMS

A. Formwork for sides of beams, walls, columns, and similar parts of the Work that does not support weight of concrete may be removed after cumulatively curing at not less than 50 deg F for 24 hours after placing concrete, if concrete is hard enough to not be damaged by form-removal operations and curing and protection operations are maintained.

1. Cut off and grind glass-fiber-reinforced plastic form ties flush with surface of concrete.

B. Leave formwork for beam soffits, joists, slabs, and other structural elements that support weight of concrete in place until concrete has achieved at least 75 percent of 28-day design compressive strength. Remove forms only if shores have been arranged to permit removal of forms without loosening or disturbing shores.

C. Clean and repair surfaces of forms to be reused in the Work. Do not use split, frayed, delaminated, or otherwise damaged form-facing material. Apply new form-release agent.

D. When forms are reused, clean surfaces, remove fins and laitance, and tighten to close joints. Align and secure joints to avoid offsets. Do not use patched forms for cast-in-place concrete surfaces.

3.4 JOINTS

A. Construction Joints: Install construction joints true to line with faces perpendicular to surface plane of cast-in-place concrete so strength and appearance of concrete are not impaired, at locations indicated or as approved by Engineer.

1. Place joints perpendicular to main reinforcement. Continue reinforcement across construction joints, unless otherwise indicated.
2. Form keyed joints as indicated. Embed keys at least 1-1/2 inches into concrete.
3. Locate joints for beams, slabs, joists, and girders in the middle third of spans. Offset joints in girders a minimum distance of twice the beam width from a beam-girder intersection.
4. Locate horizontal joints in walls and columns at underside of floors, slabs, beams, and girders and at the top of footings or floor slabs.
5. Space vertical joints in walls as indicated. Locate joints beside piers integral with walls, near corners, and in concealed locations where possible.
6. Use bonding agent at locations where fresh concrete is placed against hardened or partially hardened concrete surfaces.

B. Contraction Joints: Form weakened-plane contraction joints true to line with faces perpendicular to surface plane of cast-in-place concrete so strength and appearance of concrete are not impaired, at locations indicated or as approved by Engineer.

3.5 CONCRETE PLACEMENT

A. Before placing concrete, verify that installation of formwork, form-release agent, reinforcement, and embedded items is complete and that required inspections have been performed.

B. Do not add water to concrete during delivery, at Project site, or during placement unless approved by Engineer.

C. Before test sampling and placing concrete, water may be added at Project site, up to the limits of the specified water-cement ratio and slump, subject to limitations of ACI 301. This presumes that not all mixing water is added at the batching plant.

1. Do not add water to concrete after adding high-range water-reducing admixtures to mixture.

D. Deposit concrete continuously between construction joints. Deposit concrete to avoid segregation.

1. Deposit concrete in horizontal layers of depth to not exceed formwork design pressures and in a manner to avoid inclined construction joints.
2. Consolidate placed concrete with mechanical vibrating equipment according to ACI 301.
3. Do not use vibrators to transport concrete inside forms. Insert and withdraw vibrators vertically at uniformly spaced locations to rapidly penetrate placed layer and at least 6 inches into preceding layer. Do not insert vibrators into lower layers of concrete that have begun to lose plasticity. Do not permit vibrators to contact forms.

E. Cold-Weather Placement: Comply with ACI 306 and as follows. Protect concrete work from physical damage or reduced strength that could be caused by frost, freezing actions, or low temperatures.

1. When average high and low temperature is expected to fall below 40 deg F for three successive days, maintain delivered concrete mixture temperature within the temperature range required by ACI 301.
2. Do not use frozen materials or materials containing ice or snow. Do not place concrete on frozen subgrade or on subgrade containing frozen materials.
3. Do not use calcium chloride, salt, or other materials containing antifreeze agents.
4. Do not use chemical accelerators unless otherwise specified and approved in design mixtures.

F. Hot-Weather Placement: Comply with ACI 305 and as follows:

1. Maintain concrete temperature below 90 deg F at time of placement. Chilled mixing water or chopped ice may be used to control temperature, provided water equivalent of ice is calculated to total amount of mixing water. Using liquid nitrogen to cool concrete is Contractor's option.
2. Fog-spray forms, steel reinforcement, and subgrade just before placing concrete. Keep subgrade uniformly moist without standing water, soft spots, or dry areas.

3.6 QUALITY CONTROL DURING CONSTRUCTION

A. The Contractor shall employ a testing agency, approved by the Engineer, to perform tests and to submit test reports. Field testing to be performed by an ACI certified concrete field testing technician grade I.

B. Sampling and testing for quality control during concrete placement may include the following, as directed by Engineer.

1. Sampling Fresh Concrete: ASTM C172, except modified for slump to comply with ASTM C94.
   a. Slump testing shall be in accordance with ASTM C143; one test at point of discharge for each day's pour of each type of concrete; additional tests when concrete consistency seems to have changed.
   b. Air content testing shall be in accordance with ASTM C173, volumetric method for lightweight or normal weight concrete; ASTM C231, pressure method for normal weight concrete; one for each day's pour of each type of air-entrained concrete.
   c. Testing of concrete temperature shall be in accordance with ASTM C1064; one test hourly when air temperature is 40 deg F and below, when 80 deg F and above, and one test for each set of compressive-strength specimens.
   d. Molding of cylinders for compression testing shall be in accordance with ASTM C31; one set of four standard 6-inch dia. cylinders for each compressive-strength test, unless otherwise directed. Mold and store cylinders for laboratory-cured test specimens except when field-cured test specimens are required.
   e. Compressive-strength testing shall be in accordance with ASTM C 39; one set for each 100 cu. yd. or fraction thereof, of each concrete mix placed in any one day; one specimen tested at 7 days, two specimens tested at 28 days, and one specimen retained in reserve for later testing if required.

2. When frequency of testing will provide fewer than five strength tests for a given class of concrete, conduct testing from at least five randomly selected batches or from each batch if fewer than five are used.

3. When strength of field-cured cylinders is less than 85 percent of companion laboratory-cured cylinders, evaluate current operations and provide corrective procedures for protecting and curing the in-place concrete.

4. Strength level of concrete will be considered satisfactory if averages of sets of three consecutive strength test results equal or exceed specified compressive strength and no individual strength test result falls below specified compressive strength by more than 500 psi.

C. Test results will be reported in writing to Engineer, ready-mix producer, and Contractor within 24 hours after tests. Reports of compressive strength tests shall contain the Project identification name and number, date of concrete placement, name of concrete testing service, concrete type and class, location of concrete batch in structure, design compressive strength at 28 days, concrete mix proportions and materials, compressive breaking strength, and type of break for both 7-day tests and 28-day tests.

D. Nondestructive testing shall consist of impact hammer, sonoscope, or other nondestructive device but shall not be used as the sole basis for acceptance or rejection.

E. The testing agency will make additional tests of in-place concrete when test results indicate specified concrete strengths and other characteristics have not been attained in the structure, as directed by Engineer. Testing agency may conduct tests to determine adequacy of concrete by cored cylinders complying with ASTM C42, or by other methods as directed.

3.7 REMOVING FORMS

A. Formwork not supporting the weight of concrete, such as sides of walls, and similar parts of the work, may be removed after cumulatively curing at not less than 50 deg F for 24 hours after placing concrete, provided concrete is sufficiently hard to not be damaged by form-removal operations, concrete is able to support its own weight and provided curing and protection operations are maintained.

B. Formwork supporting the weight of concrete, such as slabs and other structural elements, may be removed in less than 14 days but in no case until concrete has attained at least 75 percent of design minimum compressive strength at 28 days, unless otherwise noted. Determine representative compressive strength of in-place concrete by testing field-cured specimens representative of concrete location or members.

C. Form-facing material may be removed 4 days after placement only if shores and other vertical supports have been arranged to permit removal of form-facing material without loosening or disturbing shores and supports.

3.8 REUSING FORMS

A. Clean and repair surfaces of forms to be reused in the Work. Split, frayed, delaminated, or otherwise damaged form-facing material will not be acceptable for exposed surfaces. Apply new form-coating compound as specified for new formwork.

B. When forms are extended for successive concrete placement, thoroughly clean surfaces, remove fins and laitance, and tighten forms to close joints. Align and secure joint to avoid offsets. Do not use patched forms for exposed concrete surfaces except as acceptable to Owner's Representative.

3.9 CONCRETE SURFACE REPAIRS

A. Repair and patch defective areas with cement mortar immediately after removing forms, when acceptable to Owner's Representative.

B. Mix dry-pack mortar, consisting of 1 part Portland cement to 2-1/2 parts fine aggregate passing a No. 16 mesh sieve, using only enough water as required for handling and placing.

1. Cut out honeycombs, rock pockets, voids over 1/4 inch in any dimension, and holes left by tie rods and bolts down to solid concrete but in no case to a depth less than 1 inch. Make edges of cuts perpendicular to the concrete surface. Thoroughly clean, dampen with water, and brush-coat the area to be patched with bonding agent. Place patching mortar before bonding agent has dried.
2. For surfaces exposed to view, blend white Portland cement and standard Portland cement so that, when dry, patching mortar will match surrounding color. Provide test areas at inconspicuous locations to verify mixture and color match before proceeding with patching. Compact mortar in place and strike-off slightly higher than surrounding surface.

C. Remove and replace formed concrete having defective surfaces if defects cannot be repaired to satisfaction of Owner's Representative. Surface defects include color and texture irregularities, cracks, spalls, air bubbles, honeycomb, rock pockets, fins and other projections on the surface, and stains and other discolorations that cannot be removed by cleaning. Flush out form tie holes and fill with dry-pack mortar or precast cement cone plugs secured in place with bonding agent.

1. Repair concealed formed surfaces, where possible, containing defects that affect the concrete's durability. If defects cannot be repaired, remove and replace the concrete.

D. Test unformed surfaces, such as monolithic slabs, for smoothness and verify surface tolerances specified for each surface and finish. Correct low and high areas as specified. Test unformed surfaces sloped to drain for trueness of slope and smoothness by using a template having the required slope.

1. Repair finished unformed surfaces containing defects that affect the concrete's durability. Surface defects includes cracks in excess of 0.01 inch wide or that penetrate to the reinforcement or completely through nonreinforced sections

regardless of width, spalling, popouts, honeycombs, rock pockets, and other objectionable conditions.

2. Correct high areas in unformed surfaces by grinding after concrete has cured at least 14 days.
3. Correct low areas in unformed surfaces during or immediately after completing surface finishing operations by cutting out low areas and replacing with patching mortar. Finish repaired areas to blend into adjacent concrete. Proprietary underlayment compounds may be used when acceptable to Owner's Representative.
4. Repair defective areas, except random cracks and single holes not exceeding 1 inch in diameter, by cutting out and replacing with fresh concrete. Remove defective areas with clean, square cuts and expose reinforcing steel with at least 3/4-inch clearance all around. Dampen concrete surfaces in contact with patching concrete and apply bonding agent. Mix patching concrete of same materials to provide concrete of same type or class as original concrete. Place, compact, and finish to blend with adjacent finished concrete. Cure in same manner as adjacent concrete.

E. Repair isolated random cracks and single holes 1 inch or less in diameter by dry-pack method. Groove top of cracks and cut out holes to sound concrete and clean of dust, dirt, and loose particles. Dampen cleaned concrete surfaces and apply bonding compound. Place dry-pack before bonding agent has dried. Compact dry-pack mixture in place and finish to match adjacent concrete. Keep patched area continuously moist for at least 72 hours.

F. Perform structural repairs with prior acceptance by Owner's Representative for method and procedure, using specified epoxy adhesive and mortar.

G. Repair methods not specified above may be used, subject to acceptance of Owner's Representative.

3.10 FINISHES, GENERAL

A. Related Unformed Surfaces: At tops of walls, horizontal offsets, and similar unformed surfaces adjacent to formed surfaces, strike off smooth and finish with a texture matching adjacent formed surfaces.

1. Continue final surface treatment of formed surfaces uniformly across adjacent unformed surfaces, unless otherwise indicated.

3.11 AS-CAST FORMED FINISHES

A. Rough-Formed Finish: As-cast concrete texture imparted by form-facing material with tie holes and defects repaired and patched. Remove fins and other projections exceeding specified limits on formed-surface irregularities.

B. Smooth-Formed Finish: As-cast concrete texture imparted by form-facing material, arranged in an orderly and symmetrical manner with a minimum of seams. Remove fins

and other projections exceeding specified limits on formed-surface irregularities. Repair and patch tie holes and defects.

3.12 CONCRETE PROTECTING AND CURING

A. General: Protect freshly placed concrete from premature drying and excessive cold or hot temperatures. Comply with ACI 306 for cold-weather protection and with ACI 305 for hot-weather protection during curing.

B. Begin curing cast-in-place concrete immediately after applying as-cast formed finishes to concrete. Cure according to ACI 308.1, by one or a combination of the following methods that will not mottle, discolor, or stain concrete:

1. Moisture Curing: Keep exposed surfaces of cast-in-place concrete continuously moist for not less than seven days with the following materials:
   a. Water.
   b. Continuous water-fog spray.
   c. Absorptive cover, water saturated and kept continuously wet. Cover concrete surfaces and edges with 12-inch lap over adjacent absorptive covers.
2. Moisture-Retaining-Cover Curing: Cover concrete surfaces with moisture-retaining cover for curing concrete, placed in widest practicable width, with sides and ends lapped at least 12 inches, and sealed by waterproof tape or adhesive. Cure for not less than seven days. Immediately repair any holes or tears during curing period; use cover material and waterproof tape.
3. Curing Compound: Mist concrete surfaces with water. Apply curing compound uniformly in continuous operation by power spray or roller according to manufacturer's written instructions. Recoat areas subjected to heavy rainfall within three hours after initial application. Maintain continuity of coating and repair damage during curing period.

END OF SECTION

SECTION 05 12 00

STRUCTURAL STEEL FRAMING

PART 1 - GENERAL

1.1 SUMMARY

A. This Section includes structural steel, as shown on the Contract Drawings, complete including framing members, base and anchor plates, connections, grouting under base and anchor plates, fabrication, delivery and installation.

1.2 REFERENCES

A. Materials and installation shall be in accordance with the latest revisions of the following codes, standards and specifications, except where more stringent requirements are specified herein:

1. American Society for Testing and Materials (ASTM)

a. ASTM A6 - General Requirements for Rolled Structural Steel Bars, Plates, Shapes and Sheet Piling.

b. ASTM A36 - Carbon Structural Steel.

c. ASTM A53 - Pipe, Steel, Black and Hot-Dipped, Zinc-Coated, Welded and Seamless.

d. ASTM A108 - Steel Bars, Carbon, Cold-Finished, Standard Quality.

e. ASTM A123 - Zinc (Hot Dipped Galvanized) Coatings on Iron and Steel Products.

f. ASTM A153 - Zinc Coating (Hot Dip) on Iron and Steel Hardware.

g. ASTM A307 - Carbon Steel Bolts and Studs, 60,000 psi Tensile Strength.

h. ASTM A325 – Structural Bolts, Steel, Heat Treated, 120/105 ksi Minimum Tensile Strength.

i. ASTM A500 - Cold-Formed Welded and Seamless Carbon Steel Structural Tubing in Round and Shapes.

j. ASTM A992, Grade 50 - Structural Steel Shapes.

k. ASTM F959 - Compressible - Washer - Type Direct Tension Indicators for Use with Structural Fasteners.

l. ASTM F1554 - Anchor Bolts, Steel, 36, 55 and 105 KSI Yield Strength.

2. American Welding Society

a. AWS D1.1 - Structural Welding Code.

b. AWS A2.0 - Standard Welding Symbols.

3. American Institute of Steel Construction

a. AISC 360 - Specification for Structural Steel for Buildings.

4. SSPC - Steel Structures Painting Council.

5. Research Council on Structural Connections (RCSC) Specification for Structural Joints Using A325 or A490 bolts.

1.3 SUBMITTALS

A. In addition to those submittals identified in the General Provisions, the following items shall also be submitted:

B. Product data for each type of product indicated.

C. Shop drawings showing fabrication of structural steel components.

1. Include profiles, sizes, spacing and locations of structural members, details of cuts, connections, splices, camber, holes, and other pertinent data.
2. Indicate welds by standard AWS symbols, distinguishing between shop and field welds, and show size, length, and type of each weld.
3. Indicate type, size, and length of bolts, distinguishing between shop and field bolts. Identify pre-tensioned and slip-critical, high-strength bolted connections.

D. Manufacturer's certificates, certifying welders employed on the Work, verifying AWS qualifications within the previous 12 months.

E. Mill test reports signed by manufacturers certifying that the following products comply with requirements:

1. Structural steel including chemical and physical properties.
2. Bolts, nuts, and washers including mechanical properties and chemical analysis.
3. Shop primers.
4. Nonshrink grout.

1.4 QUALITY ASSURANCE

A. Fabricator qualifications: Engage a firm experienced in fabricating structural steel similar to that indicated for this Project and with a record of successful in-service performance, as well as sufficient production capacity to fabricate structural steel without delaying the Work. Fabricator shall have AISC Category I, II or III Quality Certification.

B. Installer qualifications: Engage an experienced Installer who has completed structural steel work similar in material, design, and extent to that indicated for this Project and with a record of successful in-service performance.

C. Perform work in accordance with the applicable provisions of the following specifications and documents:

1. AISC, "Specification for the Design and Erection of Structural Steel for Buildings."

   a. Connections, unless noted otherwise on the Contract Documents, shall be properly designed for the end loads indicated on the Contract Drawings. Connections shall be made with double clip angles unless otherwise indicated on the Contract documents. Shop standards shall be used to the largest extent possible.

   b. Design connections not detailed on the Contract Drawings under direct supervision of a Professional Engineer experienced in design of this work and licensed in the state of New York.

2. AISC, "Specification for Allowable Stress Design of Single-Angle Members."

3. AISC, "Seismic Provisions for Structural Steel Buildings."

4. ASTM A6, "Specification for General Requirements for Rolled Steel Plates, Shapes, and Bars for Structural Use."

5. Research Council on Structural Connections (RCSC), "Specification for Structural Joints Using ASTM A 325 or A 490 Bolts."

6. AWS D1.1, "Structural Welding Code".

D. Professional Engineer shall be a licensed engineer legally authorized to practice in the State of New York and who is experienced in providing engineering services of the kind indicated. Engineering services are defined as those performed for projects with structural steel framing that are similar to that indicated for this Project in material, design, and extent.

1.5 DELIVERY, STORAGE AND HANDLING

A. Deliver structural steel to project site in such quantities and at such times to ensure continuity of installation.

B. Store materials to permit easy access for inspection and identification. Keep steel members off ground and spaced by using pallets, dunnage, or other supports and spacers. Protect steel members and packaged materials from erosion and deterioration.

1. Store fasteners in a protected place. Clean and relubricate bolts and nuts that become dry or rusty before use.

2. Do not store materials on structure in a manner that might cause distortion, damage, or overload to members or supporting structures. Repair or replace damaged materials or structures as directed.

1.6 FIELD MEASUREMENTS

A. Verify that field measurements are as shown on Contract Drawings.

1.7 SEQUENCING

Supply anchorage items to be embedded in, or attached to, other construction without delaying the Work. Provide setting diagrams, templates, instructions, and directions, as required, for installation.

PART 2 - PRODUCTS

2.1 MATERIALS AND CONSTRUCTION

A. W-Shapes shall comply with ASTM A992, Grade 50, high-strength steel.

B. Steel channels, angles, plates and threaded rods shall comply with ASTM A36, carbon steel.

C. Pipe shall comply with ASTM A53, Grade B.

D. Structural steel tubes shall comply with ASTM A500, Grade B.

F. Anchor rods shall comply with ASTM F1554, Grade 36.

G. Bolts, nuts, and washers shall meet ASTM A325.

1. Direct Tension Indicators (DTI's) shall comply with ASTM F959 Type 325 compressible washer type.

2. Provide beveled washers for S-shapes and channels.

H. Welding materials shall meet AWS D1.1, type required for materials being welded.

I. Grout shall be a non-shrink type, pre-mixed compound consisting of non-metallic aggregate, cement, water-reducing and plasticizing additives, capable of developing a minimum compressive strength of 7,000 psi at 28 days.

J. Primer shall be fast curing, lead and chromate free, universal primer with good resistance to normal atmospheric corrosion, complying with performance requirements of FS-TT-P-664. Primer shall be compatible with finish paint system.

2.2 FABRICATION

A. Fabricate and assemble in shop to greatest extent possible. Fabricate items according to AISC's "Code of Standard Practice for Steel Buildings and Bridges" and AISC specifications referenced in this section, and as indicated on final shop drawings.

1. Properly mark and match-mark materials for field assembly. Fabricate for delivery sequence which will expedite erection and minimize field handling of materials. Coordinate with Owner's Representative for fabrication sequence.

2. Identify high-strength structural steel according to ASTM A 6 and maintain markings until structural steel has been erected.

3. Complete structural-steel assemblies, including welding of units, before starting shop-priming operations.

4. Comply with fabrication tolerance limits of AISC's "Code of Standard Practice for Steel Buildings and Bridges" for structural steel.

5. Provide cambered structural-steel members where indicated.

B. Thermal Cutting: Perform thermal cutting by machine to greatest extent possible.

1. Plane thermally cut edges to be welded to comply with requirements in AWS D1.1.

C. Bolt Holes: Cut, drill, or punch standard bolt holes perpendicular to metal surfaces.

D. Finishing: Accurately finish ends of columns and other members transmitting bearing loads.

E. Holes: Provide holes required for securing other work to structural steel and for passage of other work through steel framing members.

1. Cut, drill, or punch holes perpendicular to steel surfaces. Do not thermally cut bolt holes or enlarge holes by burning. Drill holes in bearing plates.

2. Weld threaded nuts to framing and other specialty items indicated to receive other work.

F. Where finishing is required, complete assembly, including welding of units, before start of finishing operations. Provide finish surfaces of members exposed in final structure, free of marking, burns and other defects.

2.3 FINISH

A. Prepare structural component surfaces in accordance with SSPC specifications. Exposed structural steel shall receive a finish paint system.

B. Surface preparation, primer and finish coating shall be as specified in the specification entitled "Painting."

2.4 SHOP CONNECTIONS

A. High Strength Bolts: Shop-install high-strength bolts according to RCSC's "Specification for Structural Joints Using ASTM A 325 or A 490 Bolts" for type of bolt and type of joint specified.

B. Welded Connections: Comply with AWS D1.1 for welding procedure specifications, tolerances, appearance, and quality of welds and for methods used in correcting welding work.

1. Remove backing bars or runoff tabs, back gouge, and grind steel smooth.

2. Assemble and weld built-up sections by methods that will maintain true alignment of axes without exceeding tolerances of AISC's "Code of Standard Practice for Steel Buildings and Bridges" for mill material.

PART 3 - EXECUTION

3.1 INSTALLATION

A. Examination

1. Verify that field conditions are acceptable and are ready to receive work.

2. Beginning of installation means erector accepts existing conditions.

B. Setting Bases and Bearing Plates

1. Remove bond-reducing materials from all concrete and masonry bearing surfaces and roughen to improve bond to surfaces. Clean the bottom surface of base and bearing plates.

2. Set loose and attached base plates and bearing plates for structural members or wedges or other adjusting devices. A minimum of 4 anchor bolts shall be used for column base plates.

3. Snug-tighten anchor rods after supported members have been positioned and plumbed. Do not remove wedges or shims but, if protruding, cut off flush with edge of base or bearing plate before packing with grout.

4. Promptly pack grout solidly between bearing surfaces and base or bearing plates so no voids remain. Neatly finish exposed surfaces; protect grout and allow to cure. Comply with manufacturer's written installation instructions for shrinkage-resistant grouts.

C. Erection

1. Allow for erection loads, and for sufficient temporary bracing to maintain structure safe, plumb, and in true alignment until completion of erection and installation of permanent bracing.

2. Erect structural steel accurately in locations and to elevations indicated and according to AISC specs referenced in this section.

3. Field weld components indicated on Contract Drawings. Components shall be free of primer and paint prior to field welding.

4. Do not field cut or alter structural members without prior notification to Owner's Representative.

5. After erection, prime welds, abrasions, and surfaces not shop primed except surfaces to be in contact with concrete.
6. Level and plumb individual members of structures within specified AISC tolerances.

7. Align and butt weld joints in bent plate at slab edges.

8. Align and plumb edges of roof edge angle as dimensioned on contract drawings.

D. FIELD CONNECTIONS

1. High-Strength Bolts: Install high-strength bolts according to RCSC's "Specification for Structural Joints Using ASTM A 325 or A 490 Bolts" for type of bolt and type of joint specified.

   a. Fully pretensioned connections, as indicated on the Contract Drawings, shall be pretensioned and fully tightened ¾ inch dia. A325 bolts. Minimum pretension for fully tightened ¾ inch dia. bolts shall be 28 kips. Direct tension indicators shall be used at these connections to assure that bolts are properly installed and tensioned.

2. Welded Connections: Comply with AWS D1.1 for welding procedure specifications, tolerances, appearance, and quality of welds and for methods used in correcting welding work. Field weld components indicated on Contract Drawings. Components shall be free of primer and paint prior to field welding.

3.2 QUALITY CONTROL

A. Testing Agency: Owner's Representative will engage a qualified independent testing and inspecting agency to inspect field welds and high-strength bolted connections as required by the Building Code of New York State, 2007.

B. Bolted Connections: Bolted connections shall be tested and inspected according to RCSC's "Specification for Structural Joints Using ASTM A 325 or A 490 Bolts."

C. Welded Connections: Welded connections shall be inspected according to AWS D1.1.

D. Correct deficiencies in Work that test reports and inspections indicate do not comply with the Contract Documents.

END OF SECTION

SECTION 05 21 00

STEEL JOIST FRAMING

1.1 SUMMARY

A. This section includes the following open web steel joists, with bridging, attached seats, top and bottom chord extensions and anchors, as shown on the Contract Drawings, complete including fabrication, delivery and installation:

1. K-Series steel joists.
2. KCS-type, K-series joists.
3. Joist accessories.

1.2 DEFINITIONS

A. SJI "Specifications": Steel Joist Institute's "Standard Specifications, Load Tables and Weight Tables for Steel Joists and Joist Girders."

B. Special Joists: Steel joists or joist girders requiring modification by manufacturer to support nonuniform, unequal, or special loading conditions that invalidate load tables in SJI's "Specifications."

1.3 REFERENCES

A. Materials and installation shall be in accordance with the latest revisions of the following codes, standards and specifications, except where more stringent requirements are specified herein:

1. American Society for Testing and Materials (ASTM)
   a. ASTM A 36/A 36M – Standard Specification for Carbon Structural Steel.
   b. ASTM A 242/A 242M – High-Strength, Low-Alloy Structural Steel.
   c. ASTM A 307 – Carbon Steel Bolts and Studs, 60,000 PSI Tensile Strength.
   d. ASTM A 325 – Structural Bolts, Steel, Heat Treated, 120/105 ksi Minimum Tensile Strength.
   e. ASTM A 529/A 529M – High-Strength Carbon-Manganese Steel of Structural Quality, Grade 50.
   f. ASTM A 572/A 572M – High-Strength Low-Alloy Columbium-Vanadium Structural Steel, Grade 50.
   g. ASTM A 588/A 588M – High-Strength Low-Alloy Structural Steel with 50 ksi (345 MPa) Minimum Yield Point to 4 Inches (100 mm) Thick.
   h. ASTM A 606 – Steel, Sheet and Strip, High-Strength, Low-Alloy, Hot-Rolled and Cold-Rolled, with Improved Corrosion Resistance.
   i. ASTM A 1008/A 1008M – Steel, Sheet, Cold-Rolled, Carbon, Structural, High-Strength Low-Alloy and High-Strength Low-Alloy with Improved Formability.
   j. ASTM A 1011/A 1011M – Steel, Sheet and Strip, Hot-Rolled, Carbon, Structural, High-Strength Low-Alloy and High-Strength Low-Alloy with Improved Formability.
2. American Welding Society (AWS)
   a. AWS D1.1 – Structural Welding Code – Steel; American Welding Society.
3. Federal Standards (FD)

a. FS TT-P-664 – Primer Coating, Alkyd, Corrosion-Inhibiting, Lead and Chromate Free, VOC-Compliant; Federal Specifications and Standards; Revision D.

4. Steel Joist Institute (SJI)
   a. SJI (SPEC) – Standard Specifications Load Tables and Weight Tables for Steel Joists and Joist Girders; Steel Joist Institute.
   b. SJI Technical Digest No. 9 – Handling and Erection of Steel Joists and Joist Girders; Steel Joist Institute.
5. Steel Structures Painting Council (SSPC)
   a. SSPC-SP 3 – Power Tool Cleaning; Society for Protective Coatings.

1.4 PERFORMANCE REQUIREMENTS

A. Structural Performance: Provide special joists and connections capable of withstanding design loads indicated.

B. Design special joists to withstand design loads with live load deflections no greater than the following:
   1. Pipe Support Members: Vertical deflection of 1/240 of the span.

1.5 SUBMITTALS

A. In addition to those submittals identified in the General Conditions, the following items shall also be submitted:
   1. Product Data: For each type of joist, accessory, and product indicated.
   2. Shop Drawings indicating layout, designation, number, type, location, and spacings of joists. Include joining and anchorage details, bracing, bridging, joist accessories; splice and connection locations and details; and attachments to other construction.
      a. Indicate locations and details of bearing plates to be embedded in other construction.
      b. Comprehensive engineering analysis of special joists signed and sealed by the qualified professional engineer responsible for its preparation.
   3. Welding certificates.
   4. Manufacturer Certificates shall be signed by manufacturers certifying that joists comply with requirements.
   5. Mill Certificates shall be signed by bolt manufacturers certifying that bolts comply with requirements.
   6. Field quality-control test and inspection reports.
   7. Research/Evaluation Reports: For joists.

1.6 QUALITY ASSURANCE

A. Manufacturer Qualifications: A manufacturer certified by SJI to manufacture joists complying with applicable standard specifications and load tables of SJI “Specifications.”
   1. Manufacturer’s responsibilities include providing professional engineering services for designing special joists to comply with performance requirements.

B. SJI Specifications: Comply with standard specifications in SJI's "Specifications" and SJI Technical Digest No. 9 that are applicable to types of joists indicated.

C. Welding: Qualify procedures and personnel according to AWS D1.1/D1.1M, "Structural Welding Code - Steel."

1.7 DELIVERY, STORAGE, AND PROTECTION

A. Transport, handle, store, and protect products as recommended in SJI's "Specifications."

B. Protect joists from corrosion, deformation, and other damage during delivery, storage and handling.

PART 2 - PRODUCTS

2.1 MATERIALS

A. Steel: Comply with SJI's "Specifications" for web and steel-angle chord members.

B. Steel bearing plates shall be ASTM A36/A36M.

C. Carbon-steel bolts, and threaded fasteners shall be ASTM A 307, Grade A, carbon-steel, hex-head bolts and threaded fasteners; carbon-steel nuts; and flat, unhardened washers.

1. Finish: Plain, uncoated.

D. High-Strength Bolts, Nuts, and Washers: ASTM A 325, Type 1, heavy hex steel structural bolts; ASTM A 563 heavy hex carbon-steel nuts; and ASTM F 436 hardened carbon-steel washers.

1. Finish: Plain.

E. Welding Materials shall comply with AWS D1.1 with type required for materials being welded.

F. Shop and Touch-Up Primer: FS TT-P-636, lead- and chromate-free.

2.2 K SERIES STEEL JOISTS

A. Manufacture steel joists of type indicated according to "Standard Specifications for Open Web Steel Joists, K-Series" in SJI's "Specifications," with steel-angle top- and bottom-chord members, underslung ends, and parallel top chord.

1. Open-web steel joists shall be SJI KCS Type K joists. Provide:
   a. End bearing of 2-1/2 inches on steel supports.
2. Steel Joist Substitutes: Manufacture according to "Standard Specifications for Open Web Steel Joists, K-Series" in SJI's "Specifications," with steel-angle or -channel members.
3. Comply with AWS requirements and procedures for shop welding, appearance, quality of welds, and methods used in correcting welding work.
4. Top-Chord Extensions: Extend top chords of joists with SJI's Type S top-chord extensions where indicated, complying with SJI's "Specifications."

5. Extended Ends: Extend bearing ends of joists with SJI's Type R extended ends where indicated, complying with SJI's "Specifications."
6. Bottom-Chord Extensions: Provide bottom chord extensions as indicated.
7. Provide bearing ends of joists with manufacturer's standard beveled ends or sloped shoes if joist slope exceeds ¼ inch per foot.
8. Camber joists according to SJI's "Specifications."

2.3 JOIST ACCESSORIES

A. Bridging: Provide bridging anchors and number of rows of horizontal or diagonal bridging of material, size, and type required by SJI's "Specifications" for type of joist, chord size, spacing, and span
   1. Furnish additional erection bridging if required for stability.
   2. Coordinate bridging locations so as not to interface with roof openings.

B. Fabricate steel bearing plates with integral anchorages of sizes and thicknesses indicated.

C. Supply miscellaneous accessories, including splice plates and bolts required by joist manufacturer to complete joist installation.

2.4 FINISH

A. Prepare surfaces to be finished in accordance with SSPC-SP 3.

B. Shop prime joists and joist accessories with primer compatible with the finish paint system specified in the Contract Documents.

C. Do not prime paint joists and accessories that are to receive sprayed fire-resistive materials.

PART 3 - EXECUTION

3.1 INSTALLATION

A. Examination
   1. Examine supporting substrates, embedded bearing plates, and abutting structural framing for compliance with requirements for installation tolerances and other conditions affecting performance.
   2. Beginning of installation means erector accepts existing conditions.

3.2 ERECTION

A. Do not install joists until supporting construction is in place and secured.

B. Install joists and accessories plumb, square, and true to line; securely fasten to supporting construction according to SJI's "Specifications," joist manufacturer's written recommendations, and requirements in this Section.
   1. Before installation, splice joists delivered to Project site in more than one piece.
   2. Space, adjust, and align joists accurately in location before permanently fastening.

3. Install temporary bracing and erection bridging, connections, and anchors to ensure that joists are stabilized during construction.
4. Delay rigidly connecting bottom-chord extensions to columns or supports until dead loads have been applied.

C. Field weld joists to supporting steel bearing plates and framework. Coordinate welding sequence and procedure with placement of joists. Comply with AWS requirements and procedures for welding, appearance and quality of welds, and methods used in correcting welding work.

D. Bolt joists to supporting steel framework using carbon-steel bolts.

E. Bolt joists to supporting steel framework using high-strength structural bolts. Comply with RCSC's "Specification for Structural Joist Using ASTM A 325 or ASTM A 490 Bolts" for high-strength structural bolt installation and tightening requirements.

F. Install and connect bridging concurrently with joist erection, before construction loads are applied. Anchor ends of bridging lines at top and bottom chords if terminating at walls or beams.

3.3 FIELD QUALITY CONTROL

A. Testing Agency: Owner will engage a qualified independent testing and inspecting agency to inspect field welds and bolted connections and to perform field tests and inspections and prepare test and inspection reports.

END OF SECTION

SECTION 05 50 00

METAL FABRICATIONS

PART 1 - GENERAL

1.1 SUMMARY

A. This Section includes miscellaneous metal fabrications as shown on the Contract Drawings, complete including fabrication, shop finishing and installation.

1.2 REFERENCES

A. Materials and installation shall be in accordance with the latest revisions of the following codes, standards and specifications, except where more stringent requirements are specified herein:

1. American Society for Testing and Materials (ASTM)
   a. ASTM A36 - Carbon Structural Steel.
   b. ASTM A53 - Pipe, Steel, Black and Hot-Dipped, Zinc-Coated, Welded and Seamless.
   c. ASTM A123 - Zinc (Hot-Dip Galvanized) Coatings on Iron and Steel Products.
   d. ASTM A153 - Zinc Coating (Hot-Dip) on Iron and Steel Hardware.
   e. ASTM A167 – Stainless and Heat-Resisting Chromium-Nickel Steel Plate, Sheet and Strip.
   f. ASTM A193 – Alloy-Steel and Stainless Steel Bolting Materials for High-Temperature or High Pressure Service and Other Special Purpose Applications.
   g. ASTM A194 – Carbon and Alloy Steel Nuts for Bolts for High Pressure or High Temperature Service, or Both.
   h. ASTM A269 – Seamless and Welded Austenitic Stainless Steel Tubing for General Service.
   i. ASTM A276 – Stainless Steel Bars and Shapes
   j. ASTM A283 – Low and Intermediate Tensile Strength Carbon Steel Plates.
   k. ASTM A307 - Carbon Steel Bolts and Studs, 60,000 PSI Tensile Strength.
   l. ASTM A325 - Structural Bolts, Steel, Heat Treated, 120/105 KSI Minimum Tensile Strength.
   m. ASTM A500 - Cold-Formed Welded and Seamless Carbon Steel Structural Tubing in Round and Shapes.
   n. ASTM A992 - Structural Steel Shapes.
   o. ASTM B177 – Engineering Chromium Electroplating.
   p. ASTM B221 - Aluminum and Aluminum-Alloy Extruded Bars, Rods, Wire, Profiles, and Tubes.
   q. ASTM B308 - Aluminum-Alloy 6061-T6 Standard Structural Profiles.
   r. ASTM F1554 – Anchor bolts, Steel, 36, 55, and 105-KSI Yield Strength.
2. American Welding Society (AWS)
   a. AWS A2.4 - Standard Symbols for Welding, Brazing, and Nondestructive Examination.

b. AWS D1.1 - Structural Welding Code-Steel.
c. AWS D1.2 - Structural Welding Code-Aluminum.

3. SSPC - Steel Structures Painting Council.

1.3 SUBMITTALS

A. In addition to those submittals identified in the General Provisions, the following items shall also be submitted:

1. Shop drawings indicating profiles, sizes, connection attachments, reinforcing, anchorage, size and type of fasteners, and accessories. Include erection drawings, elevations, and details where applicable.
2. Indicate welded connections using standard AWS A2.4 welding symbols. Indicate net weld lengths.

1.4 QUALITY ASSURANCE

A. Perform work in accordance with the following:

1. Prepare shop drawings under direct supervision of a Professional Engineer experienced in design of this work and licensed in the State of New York.
2. Use certified welders employed on the Work, with verification of AWS qualification within the previous 12 months.

1.5 FIELD MEASUREMENTS

A. Verify that field measurements are as indicated on shop drawings.

PART 2 - PRODUCTS

2.1 MATERIALS AND CONSTRUCTION

A. Structural steel W-shapes shall be ASTM A992, Grade 50.

B. Steel M, S, C, MC and L-shapes, plates and threaded rods shall be ASTM A36.

C. Steel anchor bolts shall be ASTM F1554, Grade 36.

D. Aluminum sections shall be ASTM B308, Alloy 6061-T6.

E. Steel tubing shall be ASTM A500, Grade B.

F. Steel pipe shall be ASTM A53, Grade B, Schedule 40. Bollards shall be Schedule 80.

G. Bolts, nuts, and washers for structural steel connections shall be ASTM A325, galvanized to ASTM A153 for galvanized components.

H. Stainless steel extrusions shall comply with ASTM A269, Type 304 or 316.

I. Stainless steel bolts shall be ASTM A193, Type 304 or 316, grade B8 or B8M.

J. Stainless steel nuts shall be ASTM A194, Type 304 or 316, grade 8 or 8M.

K. Stainless steel washers shall be ANSI B18.22.1.

L. Welding materials shall comply with AWS D1.1 or AWS D1.2; type required for materials being welded.

M. Adhesive anchors for solid base substrates shall be a two-component adhesive system supplied in manufacturer's standard side-by-side or co-axial cartridge dispensed through a static mixing nozzle. System shall be capable of anchoring internally threaded inserts, threaded rods and steel reinforcing. Adhesive anchor system shall be one of the following:

1. For applications above 40°F, use one of the following:
   a. HIT HY 150 MAX or HIT RE 500 Injection Adhesive system by HILTI, Inc.
   b. SET High Strength Epoxy system by Simpson Strong-Tie
2. For applications below 40°F, use one of the following:
   a. HIT-ICE Injection Adhesive system by HILTI, Inc.
   b. ACRYLIC-TIE system by Simpson Strong-Tie

N. Adhesive anchors for hollow base substrates shall be a two-component adhesive system supplied in manufacturer's standard side-by-side or co-axial cartridge dispensed through a static mixing nozzle. System shall be capable of anchoring internally threaded inserts, threaded rods and steel reinforcing. Adhesive anchor system shall be one of the following:

1. For applications above 40°F, use one of the following:
   a. HIT HY 20 Injection Adhesive system with screen tube by HILTI, Inc.
   b. SET High Strength Epoxy system with screen tube by Simpson Strong-Tie
2. For applications below 40°F, consult manufacturer for recommendation.

O. Expansion bolts shall be HSL Expansion anchors by HILTI, Inc. or WEDGE-ALL wedge anchors by Simpson Strong-Tie.

P. Primer for steel shall be fast-curing, lead and chromate free, universal primer with good resistance to normal atmospheric corrosion, complying with performance requirements of FS-TT-P-664. Primer shall be compatible with finish paint system.

2.2 FABRICATION

A. Fit and shop assemble in largest practical sections, for delivery to site.

B. Fabricate items with joints tightly fitted and secured.

C. Grind exposed joints flush and smooth with adjacent finish surface. Make exposed joints butt tight, flush, and hairline. Ease exposed edges to small uniform radius.

D. Exposed mechanical fastenings shall consist of flush countersunk screws or bolts, unobtrusively located, consistent with design of component, except where specifically noted otherwise.

E. Supply components required for anchorage of fabrications. Fabricate anchors and related components of same material and finish as fabrication, except where specifically noted otherwise.

2.3 FINISHES

A. Surface preparation, primer and finish coatings shall be as specified in the Section entitled "Painting."

B. Do not prime surfaces in direct contact with concrete or where field welding is required.

C. Items to be galvanized shall be given a minimum 2.0 oz/sq ft zinc coating in accordance with ASTM A123.

PART 3 - EXECUTION

3.1 INSTALLATION

A. Examination
1. Verify that field conditions are acceptable and are ready to receive work.
2. Beginning of installation means erector accepts existing conditions.

B. Preparation
1. Clean and strip primed steel items to bare metal where site welding is required.
2. Supply items required to be cast into concrete or embedded in masonry with setting templates.

C. Erection
1. Install items plumb and level, accurately fitted, free from distortion or defects.
2. Allow for erection loads, and for sufficient temporary bracing to maintain true alignment until completion of erection and installation of permanent attachments.
3. Field weld components indicated on shop drawings.
4. Perform field welding in accordance with AWS D1.1 or AWS D1.2.

D. Erection Tolerances
1. Maximum variation from plumb shall be 1/4 inch per 10 feet, non-cumulative.
2. Maximum offset from true alignment shall be 1/4 inch.

E. Schedule
1. Bollards shall be steel pipe, concrete filled, crowned cap, size as detailed; galvanized.

2. Ledge and shelf angles, channels and plates not attached to structural framing shall be steel, prime painted.
3. Lintels shall be galvanized steel, as detailed and prime painted.
4. Overhead door frames and wall openings shall be steel channel sections, prime painted.
5. Fixed metal ladders shall be aluminum, mill finish, unless indicated otherwise on the Contract Drawings.
6. Aluminum structural shapes shall be mill finish.

END OF SECTION

SECTION 05 52 13

PIPE AND TUBE RAILINGS

PART 1 - GENERAL

1.1 SUMMARY

A. This Section includes the following:
1. Mechanically connected aluminum pipe handrails and railing systems.
2. Aluminum pipe handrails and railing systems anodized in accordance with the finish requirements specified herein, unless otherwise noted.
3. Welded steel pipe handrails and railing systems.
4. Welded stainless steel pipe handrails and railing systems.

1.2 DEFINITIONS

A. Definitions in ASTM E985 for railing-related terms apply to this Section.

1.3 QUALITY ASSURANCE

A. Obtain handrails and railing systems of each type and material from a single manufacturer.

1.4 PERFORMANCE REQUIREMENTS

A. Provide handrails and railings capable of withstanding the following structural loads without exceeding allowable design working stresses of materials for handrails, railings, anchors and connections:
1. Top rail and posts of railing and handrail system:
a. Concentrated load of 200 lb. applied at any point in any direction.
b. Uniform load of 50 lb./ft. applied horizontally.
c. Concentrated and uniform loads are not assumed to act concurrently.

B. Provide handrails and railing systems that allow for thermal movements resulting from the following maximum differential in ambient and surface temperatures by preventing buckling, opening of joints, overstressing of components, failure of connections, and other detrimental effects. Engineering calculation shall be based on surface temperatures of materials due to both solar heat gain and nighttime-sky heat loss.

Temperature differential of 120-deg. F ambient and 180 deg. F material surfaces.

C. Prevent galvanic action and other forms of corrosion by insulating different metals from direct contact with other incompatible materials.

1.5 SUBMITTALS

A. In addition to those submittals identified in the General Conditions, the following items shall also be submitted:

1. Shop drawings showing fabrication and installation of handrails and railing systems including plans, elevations, sections, details of components, and attachments to other units of Work.
2. For each type of railing system in the Work, provide the following samples of same design and finish indicated in the Work:
   a. 6-inch long section of each distinctly different linear railing member, including handrails, top rails, posts and balusters.
   b. Fittings and brackets.
   c. After approval of railing system, submit full-size assembled sample of railing system, made from full-size components, including top rail, post, handrail and infill. Show method of finishing members at intersections. Sample shall be kept in the Engineer's Field Office.

1.6 STORAGE

A. Store handrails and railing systems inside a well-ventilated area, away from uncured concrete and masonry and protected from weather, moisture, soiling, abrasion, extreme temperatures, and humidity.

1.7 PROJECT CONDITIONS

A. Where handrails and railing systems are indicated to fit to other construction, check actual dimensions of other construction by accurate field measurements before fabrication; show recorded measurements on final shop drawings. Coordinate fabrication schedule with construction progress to avoid delaying the Work.

PART 2 - PRODUCTS

2.1 MANUFACTURERS

A. Subject to compliance with requirements, manufacturers offering products that may be incorporated in the Work include, but are not limited to, the following:
   1. Aluminum pipe and tube handrail and railing systems:
      a. Alumagard.
      b. Aluminum Tube Railings, Inc.
      c. J.G. Braun & Co., Inc.
      d. Thompson Fabricating Co.
      e. Or equal.
   2. Steel pipe and tube handrail and railing systems:
      a. Humane Equipment Co.
      b. R & B Wagner, Inc.
      c. Or equal.
   3. Stainless steel pipe handrail and railing systems:
      a. Julius Blum & Co., Inc.
      b. CraneVeyor Corp.
      c. KDI Paragon, Inc.
      d. R & B Wagner, Inc.
      e. Or equal.

2.2 METALS

A. Provide metals free from surface blemishes where exposed to view in the finished unit. Exposed-to-view surfaces exhibiting pitting, seam marks, roller marks, stains, discolorations, or other imperfections on finished units are not acceptable.

B. Provide aluminum alloy and temper recommended by aluminum producer and finisher for type of use and finish indicated, with not less than the strength and durability properties of alloy and temper designated below, and with not more than 5 foot post spacing (o/c) for each aluminum form required. Reinforcing inserts shall be supplied as needed to meet the minimum design requirements.

1. Horizontal members of handrail and railing system:
   a. 1½" dia. Schedule 40, extruded structural pipe (ASTM B429), alloy 6063-T6.
   b. HSS 1.9x0.145 extruded structural tube (ASTM B221, B429), alloy 6063-T6.
2. Vertical members of handrail and railing system:
   a. Single Span (max. # of posts: 2):
      (1) 1½" dia. Schedule 80, extruded structural pipe (ASTM B429), alloy 6061-T6, 6005-T5, or 6105-T5.
      (2) HSS 2.375x0.125 extruded structural tube (ASTM B221, B429), alloy 6061-T6, 6005-T5, or 6105-T5.
   b. Double Span (max # of posts: 3):
      (1) 1½" dia. Schedule 40, extruded structural pipe (ASTM B429), alloy 6061-T6, 6005-T5, or 6105-T5.
      (2) HSS 1.9x0.145 extruded structural tube (ASTM B221, B429), alloy 6061-T6, 6005-T5, or 6105-T5.
   c. Triple or more span:
      (1) 1½" dia. Schedule 40, extruded structural pipe (ASTM B429), alloy 6061-T6, 6005-T5, or 6105-T5.
      (2) HSS 1.9x0.145 extruded structural tube (ASTM B221, B429), alloy 6061-T6, 6005-T5, or 6105-T5.
3. Extruded bar and tube shall meet ASTM B221 (ASTM B221M), alloy 6061-T6, 6005-T5, or 6105-T5.
4. Extruded structural pipe and tube shall meet ASTM B429, alloy 6061-T6, 6005-T5, or 6105-T5.
5. Drawn seamless tube shall meet ASTM B210 (ASTM B210M), 6063-T832.
6. Plate and sheet shall meet ASTM B209 (ASTM B209M), 6061-T6.
7. Die and hand forgings shall meet ASTM B247 (ASTM B247M), 6061-T6.
8. Castings shall meet ASTM B26/B26M, A356-T6.

C. Provide steel grade and type with not less than the strength and durability properties of grade and type designated below, and with not more than 5 foot post spacing (o/c) for each carbon steel form required. Reinforcing inserts shall be supplied as needed to meet the minimum design requirements:

1. Horizontal members of handrail and railing system:
   a. 1½" dia. Schedule 40, Structural pipe (ASTM A53), Type F, Type E and S Grade A or B.

2. Vertical members of handrail and railing system:
   a. Single Span (max. # of posts: 2):
      1½" dia. Schedule 80, Structural pipe (ASTM A53), Type E and S Grade B.
   b. Double Span (max # of posts: 3):
      1½" dia. Schedule 40, Structural (ASTM A53), Type E and S Grade B.
   c. Triple or more span:
      1½" dia. Schedule 40, Structural (ASTM A53), Type E and S Grade B.
3. Steel pipe shall meet ASTM A53/ A53M; finish, type, and weight class as follows:
   a. Black finish, unless otherwise indicated.
4. Plates, shapes and bars shall meet ASTM A36/A36M.
5. Castings shall be either gray or malleable iron, unless otherwise indicated.
   a. Gray iron shall meet ASTM A48/ A48M, Class 30, unless another class is indicated or required by structural loads.
   b. Malleable iron shall meet ASTM A47/ A47M.

D. Provide stainless steel grade and type with not less than the strength and durability properties of grade and type designated below and with not more than 5 foot post spacing (o/c) for each stainless steel form required. Reinforcing inserts shall be supplied as needed to meet the minimum design requirements:
1. Horizontal members of handrail and railing system:
   a. 1½" dia. Schedule 40S, stainless steel pipe (ASTM A269), Grade TP 304 or TP 316.
2. Vertical members of handrail and railing system:
   a. Single Span (max. # of posts: 2):
      1½" dia. Schedule 80S, stainless steel pipe (ASTM A269), Grade TP 304 or TP 316.
   b. Double Span (max # of posts: 3):
      1½" dia. Schedule 40S, stainless steel (ASTM A269), Grade TP 304 or TP 316.
   c. Triple or more span:
      1½" dia. Schedule 40S, stainless steel (ASTM A269), Grade TP 304 or TP 316.
3. Plates and bars shall meet ASTM A167, Type 304 or 316.
4. Castings shall meet ASTM A743, Grade CF 8 or CF 20.

E. Provide brackets, flanges and anchors, in cast or formed metal of the same type of material and finish as supported rails, unless otherwise indicated.

2.3 WELDING MATERIALS, FASTENERS AND ANCHORS

A. Provide type and alloy of filler metal and electrodes as recommended by producer of metal to be welded and as required for color match, strength and compatibility in fabricated items.

B. Select fasteners of type, grade and class required top produce connections suitable for anchoring handrails and railings to other types of construction indicated and capable of withstanding design loads.
1. For aluminum or stainless steel handrails and railings, use fasteners fabricated from Type 304 or Type 316 stainless steel.
2. For steel handrails, railings and fittings, use plated fasteners complying with ASTM B633, Class Fe/Zn 25 for electrodeposited zinc coating.

C. Use fasteners for interconnecting handrail and railing components fabricated from the same basic metal as fastened metal, unless otherwise indicated. Do not use metals that are corrosive or incompatible with materials joined.

Provide concealed fasteners for interconnecting handrail and railing components and for attaching them to other work, unless otherwise indicated.

D. Cast-in-place and post-installed anchors shall be of the type indicated below, fabricated from corrosion resistant materials with capability to sustain, without failure, a load equal to six times the load imposed when installed in unit masonry and equal to four times the load imposed when installed in concrete, as determined by testing per ASTM E488 conducted by a qualified independent testing agency.
1. Adhesive anchors.
2. Expansion anchors.

2.4 ANCHORING GROUT

A. Use premixed, factory-packaged, nonstaining, noncorrosive, nongaseous grout complying with ASTM C1107. Provide grout specifically recommended by manufacturer for interior and exterior applications.

2.5 FABRICATION

A. Fabricate handrails and railing systems to comply with requirements indicated for design, dimensions, details, finish, and member sizes, including wall thickness of hollow members, post spacings, and anchorage, but not less than those required to support structural loads specified by OSHA.

B. Assemble handrails and railing systems in the shop to the greatest extent possible to minimize field splicing and assembly. Disassemble units only as necessary for shipping and handling limitations. Clearly mark units for reassembly and coordinated installation. Use connections that maintain structural value of joined pieces. Clearly mark units for reassembly and coordinated installation.

C. Form changes in direction of members as follows:
1. By bending.
2. By mitering at elbow bends.
3. By any method indicated above, applicable to change of direction involved.

D. Form simple and compound curves by bending pipe in jigs to produce uniform curvature for each repetitive configuration required; maintain cylindrical cross- section of pipe throughout entire bend without buckling, twisting, cracking, or otherwise deforming exposed surfaces of pipe.

E. Fabricate handrails and railing systems for connection of members by the following means:
1. Fabricate steel and stainless steel handrails and railing for connecting members by welding. Cope components at perpendicular and skew connections to provide close fit, or use fittings designed for this purpose. Weld connections continuously to comply with the following:

a. Use materials and methods that minimize distortion and develop strength and corrosion resistance of base metals.
b. Obtain fusion without undercut or overlap.
c. Remove flux immediately.
d. At exposed connections, finish exposed surfaces smooth and blended so no roughness shows after finishing and welded surface matches contours of adjoining surfaces.

2. Fabricate handrails and railings for connecting aluminum members with concealed mechanical fasteners and fittings, unless indicated otherwise. Fabricate members and fittings to produce flush, smooth, rigid, hairline joints.

   Fabricate splice joints for field connection using an epoxy structural adhesive when this is manufacturer's standard splicing method.

F. Provide wall brackets, flanges, miscellaneous fittings and anchors to interconnect handrail and railing

G. Provide inserts and other anchorage devices for connecting handrails and railings to concrete and masonry work. Fabricate anchorage devices capable of withstanding loads imposed by handrails and railings.

H. For removable railing posts, provide slip-fit steel sockets for steel posts and stainless steel sockets for aluminum and stainless steel posts with an inside dimension only slightly larger than the post to enable tight fit as follows:
1. Limit movement of post without lateral load, measured at top, to not more than one-fortieth of the post height.
2. Provide socket covers designed and fabricated to resist being dislodged.

I. Provide chains with eye, snap hook and staple at locations indicated. Use steel chain for steel railings and stainless steel chain for aluminum and stainless steel handrail and railing systems.

J. Shear and punch metals cleanly and accurately. Remove burrs from exposed cut edges.

K. Cut, reinforce, drill, and tap components, as indicated, to receive finish hardware, screws, and similar items.

L. Provide weepholes, or another means to evacuate entrapped water, in hollow sections of railing members that are exposed to exterior or to moisture from condensation or other sources.

M. Fabricate joints that will be exposed to weather in a manner to exclude water.

N. Provide wall returns at ends of wall-mounted handrails, unless otherwise indicated.

O. Where indicated, provide toe boards at railings around openings and at the edge of open-sided floors and platforms. Fabricate to dimensions and details indicated.

2.6 ALUMINUM FINISHES

A. Comply with NAAMM "Metal Finishes Manual" for recommendations relative to applying and designating finishes. Finish designations prefixed by "AA" conform to the system established by the Aluminum Association for designating aluminum finishes.

B. All aluminum hand railing and railing systems shall receive the following finish:

Class II Clear Anodized Finish:
1. AA-M12C22A31
   a. Mechanical finish shall be as fabricated, nonspecular
   b. Chemical finish shall be etched, medium matte
   c. Anodic coating shall be Class II Architectural, clear film > 0.4 mil.

C. Protect mechanical finishes on exposed surfaces from damage by applying a strippable, temporary protective covering prior to shipment.

2.7 STEEL FINISHES

A. Prepare uncoated ferrous-metal surfaces to comply with for SSPC surface preparation specifications and environmental exposure conditions of installed handrails and railings as follows:

SSPC-SP6, “Commercial Blast Cleaning.”

B. Apply shop primer to prepared surfaces of handrail and railing components, unless otherwise indicated. See Section “Painting”.

2.8 STAINLESS STEEL FINISHES

A. Finish shall be Ornamental Grade, AISI No. 4

PART 3 EXECUTION

3.1 PREPARATION

A. Coordinate setting drawings, diagrams, templates, instructions, and directions for installing anchorages, such as sleeves, concrete inserts, anchor bolts, and miscellaneous items having integral anchors, that are to be embedded in concrete as masonry construction. Coordinate delivery of such items to Project site.

3.2 INSTALLATION, GENERAL

A. Fit exposed connections accurately together to form tight, hairline joints.

B. Perform cutting, drilling, and fitting required for installing handrails and railing systems. Set handrails and railing systems accurately in location, alignment, and elevation, measured from established lines and levels and free from rack.

1. Do not weld, cut, or abrade surfaces of handrails and railing components that have been coated or finished after fabrication and are intended for field connection by mechanical or other means without further cutting or fitting.
2. Set posts plumb within a tolerance of 1/4 inch in 12 feet.
3. Align rails so that variations from level for horizontal members and from parallel with rake of steps and ramps for sloping members do not exceed 1/4 inch in 12 feet.

C. Coat concealed surfaces of aluminum that will come into contact with grout, concrete, masonry, wood, or dissimilar metals with a heavy coat of bituminous paint.

D. Adjust handrails and railing systems prior to anchoring to ensure matching alignment at abutting joints. Space posts at interval indicated.

E. Provide anchorage devices and fasteners where necessary for securing handrails and railing systems and for properly transferring loads to in-place construction.

3.3 RAILING CONNECTIONS

A. Use fabricated fittings for permanently connecting aluminum railing components by mechanical connection. Cope or butt components to provide 100 percent contact, or use fittings designed for this purpose.

B. Use fully welded joints for permanently connecting steel and stainless steel railing components.

C. Install expansion joints not farther apart than required to accommodate thermal movement. Provide slip-joint internal sleeve extending two inches beyond the joint on each side, fasten internal sleeve securely to one side and locate joint within six inches of post.

3.4 ANCHORING POSTS

A. Foam or core-drill holes not less than 6 inches deep and 0.6 inch larger than OD of post for post installation in concrete. Clean holes of loose material, insert posts and fill annular space between post and concrete with non-shrink, non-metallic grout or anchoring cement.

B. Cover anchorage joint with flange of same metal as post, attached to post with set screws.

C. Install removable railing sections, where indicated, in slip-fit metal sockets.

3.5 ATTACHING HANDRAILS TO WALLS

A. Attach handrails to wall with wall brackets. Provide bracket with 1-1/2 inch clearance from inside face of handrail to finished wall surface.

B. Locate brackets at spacing required to support structural loads.

C. Secure wall brackets to building construction as follows:
1. For concrete and solid masonry, use drilled-in expansion shields and hanger or lag bolts.
2. For hollow masonry, use toggle bolts.

3.6 ADJUSTING AND CLEANING

A. Clean aluminum and stainless steel by washing thoroughly with clean water and soap, followed by rinsing with clean water.

B. Cleaning and touchup painting of steel surfaces are specified in Section “Painting”.

3.7 PROTECTION

A. Protect finishes of handrail and railing systems from damage during construction period with temporary protective coverings approved by railing manufacturer. Remove protective coverings at time of Completion.

B. Restore finishes damaged during installation and construction period so that no evidence remains of correction work. Return items that cannot be refinished in the field to the shop; make required alterations and refinish entire unit, or provide new units.

END OF SECTION

SECTION 05 53 00

METAL GRATINGS

PART 1 - GENERAL

1.1 SUMMARY

A. This Section Includes the Following:
   1. Metal bar gratings.
   2. Extruded-aluminum plank gratings.
   3. Metal frames and supports for gratings.

1.2 REFERENCES

A. Materials and installation shall be in accordance with the latest revisions of the following codes, standards and specifications, except where more stringent requirements are specified herein:
   1. National Association of Architectural Metal Manufacturer's (NAAMM)
      a. NAAMM MBG 531 - Metal Bar Grating Manual for Steel, Stainless Steel and Aluminum Gratings and Stair Treads.
      b. Metal Finishes Manual for Architectural and Metal Products
   2. American Welding Society (AWS)
      a. ASW D1.2 - Structural Welding Code – Aluminum
   3. American Society for Testing and Materials (ASTM)
      a. ASTM B209 - Aluminum and Aluminum-Alloy Sheet and Plate
      b. ASTM B221 - Aluminum and Aluminum-Alloy Extruded Bars, Rods, Wire, Profiles, and Tubes

1.3 QUALITY ASSURANCE

A. Fabricator shall be experienced in producing gratings similar to those indicated for this Project and with a record of successful in-service performance, as well as sufficient production capacity to produce required units.

B. Metal Bar Grating Standards: Comply with applicable requirements of the following:

   1. Non-Heavy-Duty Metal Bar Gratings: Comply with NAAMM MBG 531, "Metal Bar Grating Manual for Steel, Stainless Steel, and Aluminum Gratings and Stair Treads."

C. Comply with applicable provisions of AWS D1.2 "Structural Welding Code – Aluminum".

   1. Certify that each welder has satisfactorily passed AWS qualification tests for welding processes involved and, if pertinent, has undergone recertification.

1.4 SUBMITTALS

A. The Following Items Shall be Submitted:

1. Product Data
   a. Metal bar gratings.
   b. Extruded-aluminum plank gratings.
   c. Clips and anchorage devices for gratings.

2. Shop Drawings detailing fabrication and erection of gratings. Include plans, elevations, sections, and details of connections. Show areas of fixed and removable sections, anchorage, accessory items, and load tables. Provide templates for anchors and bolts specified for installation under other Sections.

3. Welding Certificates: Copies of certificates for welding procedures and personnel.

1.5 PROJECT CONDITIONS

A. If possible, design gratings so that they do not have to fit other construction, and delete this article.

B. Field Measurements: Verify actual locations of walls and other construction contiguous with gratings by field measurements before fabrication.

1.6 COORDINATION

A. Coordinate installation of anchorages for gratings, grating frames, and supports. Furnish setting drawings, templates, and directions for installing anchorages, including sleeves, concrete inserts, anchor bolts, and items with integral anchors, that are to be embedded in concrete or masonry. Deliver such items to Project site in time for installation.

PART 2 - PRODUCTS

2.1 ALUMINUM

A. Aluminum, General: Provide alloy and temper recommended by aluminum producer for type of use indicated, and with not less than the strength and durability properties of alloy and temper designated below for each aluminum form required.

B. Extruded Bars and Shapes: ASTM B 221, alloys as follows:

1. 6061-T6 or 6063-T6, for bearing bars of gratings and shapes.
2. 6061-T1, for grating crossbars.

C. Aluminum Sheet: ASTM B 209 (ASTM B 209M), Alloy 5052-H32.

2.2 FASTENERS

A. General: Unless otherwise indicated, provide Type 316 stainless-steel fasteners for exterior use and zinc-plated fasteners with coating complying with ASTM B 633 or ASTM F 1941, Class Fe/Zn 5, at exterior walls. Select fasteners for type, grade, and class required.

1. Provide stainless-steel fasteners for fastening aluminum.

2.3 MISCELLANEOUS MATERIALS

A. Bituminous Paint: Cold-applied asphalt emulsion complying with ASTM D 1187.

2.4 FABRICATION

A. Shop Assembly: Fabricate grating sections in shop to greatest extent possible to minimize field splicing and assembly. Disassemble units only as necessary for shipping and handling limitations. Use connections that maintain structural value of joined pieces. Clearly mark units for reassembly and coordinated installation.

B. Cut, drill, and punch material cleanly and accurately. Remove burrs and ease edges to a radius of approximately 1/32 inch unless otherwise indicated. Remove sharp or rough areas on exposed surfaces.

C. Form from materials of size, thickness, and shapes indicated, but not less than that needed to support indicated loads.

D. Fit exposed connections accurately together to form hairline joints.

E. Provide for anchorage of type indicated; coordinate with supporting structure. Fabricate and space the anchoring devices to secure gratings, frames, and supports rigidly in place and to support indicated loads.

2.5 METAL BAR GRATINGS

A. Manufacturers: Subject to compliance with requirements, available manufacturers offering products that may be incorporated into the Work include, but are not limited to, the following:

1. IKG Industries; a division of Harsco Corporation.
2. Ohio Gratings, Inc.
3. Klemp. Corp

B. Pressure-Locked, Rectangular Bar Aluminum Grating: Fabricated by [pressing rectangular flush-top crossbars into slotted bearing bars] [or] [swaging crossbars between bearing bars].

1. Bearing Bar Spacing: 1-3/16 inches o.c., unless otherwise noted on Contract Drawings.
2. Bearing Bar Depth: As indicated on the Contract Drawings.

3. Bearing Bar Thickness: 3/16 inch.
4. Crossbar Spacing: 4 inches o.c.
5. Traffic Surface: As indicated.
6. Aluminum Finish: Mill finish.

C. Pressure-Locked, Aluminum I-Bar Grating: Fabricated by swaging crossbars between bearing bars.

1. Bearing Bar Spacing: 1-3/16 inches o.c. unless otherwise noted on the Contract Drawings.
2. Bearing Bar Depth: As indicated on the Contract Drawings.
3. Bearing Bar Flange Width: 3/16 inch.
4. Crossbar Spacing: 4 inches o.c.
5. Traffic Surface: As indicated on the Contract Drawings.
6. Aluminum Finish: Mill finish.

D. Removable Grating Sections: Fabricate with banding bars attached by welding to entire perimeter of each section. Include anchors and fasteners of type indicated or, if not indicated, as recommended by manufacturer for attaching to supports.

E. Grating Attachment to Supports

1. Provide no fewer than four saddle clips for each grating section composed of rectangular bearing bars 3/16 inch or less in thickness and spaced 15/16 inch or more o.c., with each clip designed and fabricated to fit over two bearing bars.

F. Fabricate cutouts in grating sections for penetrations indicated. Arrange cutouts to permit grating removal without disturbing items penetrating gratings.

1. Edge-band openings in grating that interrupt four or more bearing bars with bars of same size and material as bearing bars.

G. Do not notch bearing bars at supports to maintain elevation.

2.6 GRATING FRAMES AND SUPPORTS

A. Frames and Supports for Metal Gratings: Fabricate from metal shapes, plates, and bars of welded construction to sizes, shapes, and profiles indicated and as necessary to receive gratings. Miter and weld connections for perimeter angle frames. Cut, drill, and tap units to receive hardware and similar items.

1. Unless otherwise indicated, fabricate from same basic metal as gratings.
2. Equip units indicated to be cast into concrete or built into masonry with integrally welded anchors. Unless otherwise indicated, space anchors 24 inches o.c. and provide minimum anchor units in the form of steel straps 1-1/4 inches wide by 1/4 inch thick by 8 inches long.

PART 3 - EXECUTION

3.1 INSTALLATION, GENERAL

A. Fastening to In-Place Construction: Provide anchorage devices and fasteners where necessary for securing gratings to in-place construction. Include threaded fasteners for concrete and masonry inserts, through-bolts, lag bolts, and other connectors.

B. Cutting, Fitting, and Placement: Perform cutting, drilling, and fitting required for installing gratings. Set units accurately in location, alignment, and elevation; measured from established lines and levels and free of rack.

1. Perform all cutting and fitting required for installation. Grating shall be placed such that cross bars align.
2. Wherever grating is pierced by pipes, ducts and structural members, cut openings neatly and accurately to size and weld a rectangular band bar of the same height and material as bearing bars.
3. Cutouts for circular obstructions are to be at least 2 inches larger in diameter than the obstruction. Cutouts for al piping 4 inches or less shall be made in the field.
4. All rectangular cutouts are to be made to the next bearing bar beyond the penetration with a clearance not to exceed bearing bar spacing.
5. Utilize standard panel widths wherever possible.

C. Provide temporary bracing or anchors in formwork for items that are to be built into concrete or masonry.

D. Fit exposed connections accurately together to form hairline joints.

E. Field Welding: Comply with the following requirements:

1. Use materials and methods that minimize distortion and develop strength and corrosion resistance of base metals.
2. Obtain fusion without undercut or overlap.
3. Remove welding flux immediately.

F. Corrosion Protection: Coat concealed surfaces of aluminum that will come into contact with grout, concrete, masonry, wood, or dissimilar metals, with a heavy coat of bituminous paint.

3.2 INSTALLING METAL BAR GRATINGS

A. General: Install gratings to comply with recommendations of referenced metal bar grating standards that apply to grating types and bar sizes indicated, including installation clearances and standard anchoring details.

B. Attach removable units to supporting members with type and size of clips and fasteners indicated or, if not indicated, as recommended by grating manufacturer for type of installation conditions shown.

C. Attach nonremovable units to supporting members by welding where both materials are same; otherwise, fasten by bolting as indicated above.

3.3 INSTALLING METAL PLANK GRATINGS

A. General: Comply with manufacturer's written instructions for installing gratings. Use manufacturer's standard anchor clips and hold-down devices for bolted connections.

B. Attach aluminum units to steel supporting members by bolting at side channels at every point of contact and by bolting intermediate planks at each end on alternate sides. Bolt adjacent planks together at midspan.

END OF SECTION

SECTION 13 34 19

METAL BUILDING SYSTEMS

PART 1 - GENERAL

1.1 SUMMARY

A. The Pre-engineered Metal Building (PEMB) is to be constructed at the Owner's facility and have one portion (short term section) of the building house a treatment train that will be operated approximately seven months out of each year (April 15th through November 15th) for four years beginning in the year 2012 while the remaining portion (long term section) of the building will house a part of the treatment train that will be operated from November 15th through April 15th and then continuously after the four year life span of the short term treatment train. This short term portion of the building will be heated. The Manufacturer shall select and design building components such that removal of the short term section can be performed and the long term section will remain with minimal effort and rework and continue to perform as required by this specification.

B. The PEMB shall be kept to Manufacturer's standard offerings, as much as possible. Any requests in this RFP which, in the Subcontractor's opinion, impart unnecessary costs or unnecessarily differ from Manufacturer's standard offerings shall be clearly identified in Bidder's proposal.

C. Section Includes:
1. Structural-steel framing.
2. Metal roof panels.
3. Metal wall panels.
4. Metal soffit panels.
5. Thermal insulation.
6. Doors and frames.
7. Accessories.

1.2 Coordination Requirements

A. Bid Review Meeting: Following the Engineer's review of the proposal, a bid review meeting will be held in Syracuse, NY.

B. Scheduling: The construction of the PEMB must be completed by the dates indicated in the Construction Planning Schedule provided as Section VII.

1.3 INFORMATIONAL SUBMITTALS

A. Prepare and provide drawings and submittals specific to this system in accordance with the requirements shown on Table 1 (provided as Appendix A to this specification).

B. Product Data Submittals: "Catalog cuts" and spec sheets included as submittals shall be marked to specifically indicate the equipment and materials proposed for this project. Indicate selections with arrows, and cross out irrelevant data.

C. Submittals:
1. Metal Building System Certificates: For each type of metal building system, from manufacturer.
2. Shop Drawings: Signed and sealed by a qualified professional engineer licensed in the State of New York. Include the following:
   a. Name and location of Project.
   b. Order number.
   c. Name of manufacturer.
   d. Name of Subcontractor.
   e. Building dimensions including width, length, height, and roof slope.
   f. Drawings of structural steel framing including construction details, material descriptions, dimensions of individual components and profiles,
   g. Anchor-Bolt Plans: Submit anchor-bolt plans and templates before foundation work begins. Include location, diameter, and projection of anchor bolts required to attach metal building to foundation. Indicate column reactions at each location. Anchor bolt embedment depth to be specified by the Engineer.
   h. Indicate compliance with AISC standards for hot-rolled steel and AISI standards for cold-rolled steel, including edition dates of each standard.
   i. Indicate governing building code and year of edition
   j. Design Loads: Include dead load, roof live load, collateral loads, roof snow load, deflection, wind loads/speeds and exposure, seismic design category or effective peak velocity-related acceleration/peak acceleration, and auxiliary loads (cranes).
   k. Load Combinations: Indicate that loads were applied acting simultaneously with concentrated loads, according to governing building code.
   l. Building-Use Category: Indicate category of building use and its effect on load importance factors.
   m. Provide a statement that the metal building system and components are in compliance with IAS certification or compliance with Chapter 17 of the BCNYS, 2007.
   n. Documentation indicating substantial compliance with local code requirements and ordinances. Please note that Building Permits will be handled by the Contractor and is not to be addressed by the Subcontractor.
3. For Record Purposes - Material test reports.
   a. Structural steel including chemical and physical properties
   b. Bolts, nuts, and washers including mechanical properties and chemical analysis.
   c. Tension-control, high-strength, bolt-nut-washer assemblies.
   d. Shop primers
   e. Nonshrink grout.

D. For Record Purposes - Source quality-control reports
1. Sample reports of manufacturers detailed fabrication and quality-control procedures.

E. Field quality-control reports.
1. Building Manufacturer to identify in the bid, measures of quality control during field erection for submittal after erection for record purposes.

F. Warranties:
   1. Provide warranty language for all building associated appurtenances.

G. Welding certificates

1.4 CLOSEOUT SUBMITTALS

A. Operations and Maintenance manuals where applicable.

1.5 QUALITY ASSURANCE

A. Manufacturer Qualifications:
   1. Demonstrate IAS certification or compliance with Chapter 17 of the BCNYS, 2007.
   2. Engineering Responsibility: Preparation of Shop Drawings and comprehensive engineering analysis by a qualified professional engineer licensed in the State of New York.

B. Erector Qualifications: An experienced erector who specializes in erecting and installing work similar in material, design, and extent to that indicated for this Project and who is acceptable to manufacturer. The erector shall have successfully completed two projects of similar scope.

C. Welding Qualifications: Qualify procedures and personnel according to the following:
   1. AWS D1.1/D1.1M, "Structural Welding Code - Steel."
   2. AWS D1.3, "Structural Welding Code - Sheet Steel."

D. Structural Steel: Comply with AISC 360, "Specification for Structural Steel Buildings," for design requirements and allowable stresses.

E. Cold-Formed Steel: Comply with AISI's "North American Specification for the Design of Cold-Formed Steel Structural Members" for design requirements and allowable stresses.

F. Owner or Owner’s Representative reserves the right to conduct scheduled visits to Manufacturer’s facilities during fabrication to witness progress and fabrication and/or during Manufacturer’s shop testing procedures.

G. Code Compliance: Building Code of New York State Version 2007 and all codes referenced therein, including but not limited to Energy Conservation Construction Code of New York State and all codes referenced therein.

1.6 WARRANTY

A. Provide materials and labor warranty in accordance with the Subcontractor Agreement for Services.

B. Any defects in equipment shall be corrected by Manufacturer, at no additional cost to the Owner or Buyer. Manufacturer shall provide and install additional or replacement

equipment, parts, and labor (including return trips to the site as needed), to correct deficiencies.

C. Special Warranty on Metal Panel Finishes: Manufacturer's standard form in which manufacturer agrees to repair finish or replace metal panels that show evidence of deterioration of factory-applied finishes within specified warranty period.
   1. Finish Warranty Period: 20 years from date of Substantial Completion as defined by receipt of Certificate of Occupancy or final submittal of field quality control reports and closure of punch list items.

D. Special Weathertightness Warranty for Standing-Seam Metal Roof Panels: Manufacturer's standard form in which manufacturer agrees to repair or replace standing-seam metal roof panel assemblies that leak or otherwise fail to remain weathertight within specified warranty period.
   1. Warranty Period: 20 years from date of Substantial Completion as defined by receipt of Certificate of Occupancy or final submittal of field quality control reports and closure of punch list items.

PART 2 – PRODUCTS

2.1 MANUFACTURERS

A. Manufacturers: Subject to compliance with requirements, available manufacturers offering products that may be incorporated into the Work include, but are not limited to, the following:
   1. Butler Manufacturing Company; a BlueScope Steel company.
   2. Essex Structural Steel Co., Inc.
   3. Star Building Systems; an NCI company.
   4. Varco Pruden Buildings; a United Dominion company.
   5. Or equal

2.2 METAL BUILDING SYSTEM PERFORMANCE

A. Delegated Design: Design metal building system, including comprehensive engineering analysis by a qualified professional engineer, using performance requirements and design criteria indicated in the Request for Proposal Documents.

B. Structural Performance: Metal building systems shall be designed according to procedures in MBMA's "Metal Building Systems Manual."
   1. Design Loads including Seismic: As indicated on drawings included in App C.
   2. Deflection Limits: Design metal building system assemblies to withstand design loads with deflections no greater than the following:
      a. Purlins and Rafters: Vertical deflection of 1/180
      b. Girts: Horizontal deflection of 1/180
      c. Metal Roof Panels: Vertical deflection of 1/180
      d. Metal Wall Panels: Horizontal deflection of 1/180
      e. Design secondary-framing system to accommodate deflection of primary framing and construction tolerances, and to maintain clearances at openings.
   3. Drift Limits: Engineer building structure to withstand design loads with drift limits no greater than the following:
      a. Lateral Drift: Maximum of 1/180 of the building height.

4. Metal panel assemblies shall withstand the effects of gravity loads and loads and stresses within limits and under conditions indicated according to ASTM E 1592.

C. Thermal Movements: Allow for thermal movements resulting from the following maximum change (range) in ambient and surface temperatures by preventing buckling, opening of joints, overstressing of components, failure of joint sealants, failure of connections, and other detrimental effects. Base engineering calculations on surface temperatures of materials due to both solar heat gain and nighttime-sky heat loss.
   1. Temperature Change (Range): 120 deg F, ambient; 180 deg F, material surfaces.

D. Air Infiltration for Metal Roof Panels: Air leakage through assembly of not more than 0.06 cfm/sq. ft.of roof area when tested according to ASTM E 1680 at negative test-pressure difference of 1.57 lbf/sq. ft.

E. Air Infiltration for Metal Wall Panels: Air leakage through assembly of not more than 0.06 cfm/sq. ft. of wall area when tested according to ASTM E 283 at static-air-pressure difference of 1.57 lbf/sq. ft.

F. Water Penetration for Metal Roof Panels: No water penetration when tested according to ASTM E 1646 at test-pressure difference of 2.86 lbf/sq. ft.

G. Water Penetration for Metal Wall Panels: No water penetration when tested according to ASTM E 331 at a wind-load design pressure of not less than 2.86 lbf/sq. ft.

H. Wind-Uplift Resistance: Provide metal roof panel assemblies that comply with UL 580 for Class 90.

2.3 STRUCTURAL-STEEL FRAMING

A. Primary Framing: Manufacturer's standard primary-framing system, designed to withstand required loads and specified requirements. Primary framing includes transverse and lean-to frames; rafter, rake, and canopy beams; sidewall, intermediate, end-wall, and corner columns; and wind bracing.
   1. General: Provide frames with attachment plates, bearing plates, and splice members. Factory drill for field-bolted assembly.
      Frame Configuration: Rigid Modular Frames: I-shaped frame sections fabricated from shop-welded, built-up steel plates or structural-steel shapes. Provide interior columns fabricated from round steel pipes or tubes, or shop-welded, built-up steel plates.
   2. Exterior Column Type: Tapered
   3. Rafter Type: Tapered

B. End-Wall Framing: Manufacturer's standard primary end-wall framing fabricated for field-bolted assembly to comply with the following:
   1. End-Wall and Corner Columns: I-shaped sections fabricated from structural-steel shapes; shop-welded, built-up steel plates; or C-shaped, cold-formed, structural-steel sheet.
   2. End-Wall Rafters: C-shaped, cold-formed, structural-steel sheet; or I-shaped sections fabricated from shop-welded, built-up steel plates or structural-steel shapes.
   3. Design End-Wall framing to sustain interior rigid-frame loads and wind loads.

4. Design partition wall framing to sustain interior rigid frame loads and to be able to sustain future end-wall framing and wind loads.

C. Secondary Framing: Manufacturer's standard secondary framing, including purlins, girts, eave struts, flange bracing, base members, gable angles, clips, headers, jambs, and other miscellaneous structural members. Unless otherwise indicated, fabricate framing from either cold-formed, structural-steel sheet or roll-formed, metallic-coated steel sheet, prepainted with coil coating.

D. Bolts: Provide plain-finish bolts for structural-framing components that are primed or finish painted. Provide zinc-plated or hot-dip galvanized bolts for structural-framing components that are galvanized.

E. Unheaded Anchor Rods: ASTM F 1554, Grade 36: Design and provide anchor bolts and components for transferring the design forces from the structural framing to the concrete foundation system. Required elements include the number and diameter of anchor bolts at each column. If the anchor rods are insufficient for transferring shear forces to the foundation, design and provide shear lugs or an approved alternate means of shear transfer to the foundation.
1. Configuration: Straight.
2. Nuts: ASTM A 563 (ASTM A 563M) hex carbon steel.
3. Plate Washers: ASTM A 36/A 36M carbon steel.
4. Washers: ASTM F 436 (ASTM F 436M) hardened carbon steel.
5. Finish: Plain.

F. Finish: Factory primed. Apply manufacturer’s gray primer immediately after cleaning and pretreating.

2.4 METAL ROOF PANELS

A. Vertical-Rib, Standing-Seam Metal Roof Panels: Formed with ribs at panel edges and intermediate stiffening ribs symmetrically spaced between ribs; designed for sequential installation by mechanically attaching panels to supports using concealed clips located under one side of panels and engaging opposite edge of adjacent panels.
1. Material: Zinc-coated (galvanized) steel sheet of thickness required to satisfy load criteria.
2. Clips: Manufacturer's standard, floating type to accommodate thermal movement; fabricated from zinc-coated (galvanized) steel sheet.
3. Joint Type: Mechanically seamed, folded according to manufacturer's standard.
4. Uplift Rating: UL 90.
5. Finish: Color for panels shall be selected from manufacturer’s full range.

B. Snow Guards
1. Provide and install snow guards of size and spacing designed specifically for the metal building roof system.

2.5 METAL WALL PANELS

A. Exposed-Fastener Metal Wall Panels: Formed with raised, trapezoidal major ribs and intermediate stiffening ribs symmetrically spaced] between major ribs; designed to be installed by lapping side edges of adjacent panels and mechanically attaching panels to supports using exposed fasteners in side laps.
   1. Material: Zinc-coated (galvanized) steel sheet of thickness required to satisfy load criteria.
   2. Finish: Color for panels shall be selected from manufacturer’s full range.

2.6 THERMAL INSULATION

A. Faced Metal Building Insulation: ASTM C 991, Type II, glass-fiber-blanket insulation; 0.5-lb/cu. ft. density; 2-inch- wide, continuous, vapor-tight edge tabs; with a flame-spread index of 25 or less.
   1. Vapor-Retarder Facing: ASTM C 1136, with permeance not greater than when tested according to ASTM E 96/E 96M, Desiccant Method.

2.7 DOORS AND FRAMES

A. Swinging Personnel Doors and Frames: Metal building system manufacturer's standard doors and frames; prepared and reinforced at strike and at hinges to receive factory- and field-applied hardware according to Builder’s Hardware Manufacturer’s Association (BHMA) A156 Series.
   1. Hardware:
      a. Provide hardware for each door leaf, as follows:
         1) Hinges: BHMA A156.1. Three plain-bearing, standard-weight, full-mortise, stainless-steel or bronze, template-type hinges; 4-1/2 by 4-1/2 inches , with non-removable pin.
         2) Lockset: BHMA A156.2. Mortise, with lever handle type.
         3) Exit Device: BHMA A156.3. Touch- or push-bar type.
         4) Threshold: BHMA A156.21. Extruded aluminum.
         5) Silencers: Pneumatic rubber; three silencers on strike jambs of single door frames and two silencers on heads of double door frames.
         6) Closer: BHMA A156.4. Surface-applied, standard-duty hydraulic type.
         7) Weather Stripping: Vinyl applied to head and jambs, with vinyl sweep at sill.

B. Finishes for Personnel Doors and Frames:
   1. Prime Finish: Factory-apply manufacturer's gray primer immediately after cleaning and pre-treating.

C. Overhead Coiling Doors
   1. Door Curtains: Fabricate overhead coiling-door curtain of interlocking metal slats, designed to withstand wind loading indicated, in a continuous length for width of door without splices. Unless otherwise indicated, provide slats of thickness and mechanical properties recommended by door manufacturer for performance, size, and type of door indicated, and as follows:

a. Steel Door Curtain Slats: Zinc-coated (galvanized), cold-rolled structural steel sheet; complying with ASTM A 653, with G90 (Z275) zinc coating; nominal sheet thickness (coated) as required to meet requirements.

b. Aluminum Door Curtain Slats: ASTM B 209 sheet or ASTM B 221 extrusions, alloy and temper standard with manufacturer for type of use and finish indicated; thickness of 0.050 inch as required to meet requirements.

c. Insulation: Fill slats for insulated doors with manufacturer's standard thermal insulation complying with maximum flame-spread and smoke-developed indexes of 75 and 450, respectively, according to ASTM E 84. Enclose insulation completely within slat faces.

d. Gasket Seal: Provide insulated slats with manufacturer's standard interior-to-exterior thermal break or with continuous gaskets between slats.

e. End locks and Wind locks for Service Doors: Malleable-iron casings galvanized after fabrication, secured to curtain slats with galvanized rivets or high-strength nylon. Provide locks on not less than alternate curtain slats for curtain alignment and resistance against lateral movement.

f. Bottom Bar for Service Doors: Consisting of two angles, each not less than 1-1/2 by 1-1/2 by 1/8 inch thick; fabricated from manufacturer's standard hot-dip galvanized steel, stainless steel, or aluminum extrusions to match curtain slats and finish.

g. Astragal for Interior Doors: Equip each door bottom bar with a replaceable, adjustable, continuous, compressible gasket of flexible vinyl, rubber, or neoprene as a cushion bumper.

h. Curtain Jamb Guides: Manufacturer's standard angles or channels and angles of same material and finish as curtain slats unless otherwise indicated, with sufficient depth and strength to retain curtain, to allow curtain to operate smoothly, and to withstand loading. Slot bolt holes for guide adjustment. Provide removable stops on guides to prevent over travel of curtain, and a continuous bar for holding wind locks.

i. Hood General: Form sheet metal hood to entirely enclose coiled curtain and operating mechanism at opening head. Contour to fit end brackets to which hood is attached. Roll and reinforce top and bottom edges for stiffness. Form closed ends for surface-mounted hoods and fascia for any portion of between-jamb mounting that projects beyond wall face. Equip hood with intermediate support brackets as required to prevent sagging. Provide complete weather tight construction between the hood and building.

   1) Galvanized Steel: Nominal 0.028-inch-thick, hot-dip galvanized steel sheet with G90 zinc coating, complying with ASTM A 653.

j. Electric door operator assembly of size and capacity recommended and provided by door manufacturer for door and operation-cycles requirement specified, with electric motor and factory-prewired motor controls, starter, gear-reduction unit, solenoid-operated brake, clutch, remote-control stations, control devices, integral gearing for locking door, and accessories required for proper operation.

   1) Comply with NFPA 70.

2) Provide control equipment complying with NEMA ICS 1, NEMA ICS 2, and NEMA ICS 6, with NFPA 70 Class 2 control circuit, maximum 24 V, ac or dc.

k. Finish: Baked-Enamel or Powder-Coated Finish, Color as selected from manufacturer's full range.

2.8 ACCESSORIES

A. General: Provide accessories as standard with metal building system manufacturer and as specified. Fabricate and finish accessories at the factory to greatest extent possible, by manufacturer's standard procedures and processes. Comply with indicated profiles and with dimensional and structural requirements.

1. Form exposed sheet metal accessories that are without excessive oil-canning, buckling, and tool marks and that are true to line and levels indicated, with exposed edges folded back to form hems.

B. Roof Panel Accessories: Provide components required for a complete metal roof panel assembly including copings, fasciae, corner units, ridge closures, clips, sealants, gaskets, fillers, closure strips, and similar items. Match material and finish of metal roof panels unless otherwise indicated.

C. Wall Panel Accessories: Provide components required for a complete metal wall panel assembly including copings, fasciae, mullions, sills, corner units, clips, sealants, gaskets, fillers, closure strips, and similar items. Match material and finish of metal wall panels unless otherwise indicated.

D. Flashing and Trim: Formed from metallic-coated steel sheet or aluminum-zinc alloy-coated steel sheet pre-painted with coil coating; finished to match adjacent metal panels.

E. Gutters: Formed from metallic-coated steel sheet or aluminum-zinc alloy-coated steel sheet pre-painted with coil coating; finished to match roof fascia and rake trim. Match profile of gable trim, complete with end pieces, outlet tubes, and other special pieces as required. Fabricate in minimum 96-inch long sections, sized according to SMACNA's "Architectural Sheet Metal Manual."

1. Gutter Supports: Fabricated from same material and finish as gutters.
2. Strainers: Bronze, copper, or aluminum wire ball type at outlets.

F. Downspouts: Formed from, zinc-coated (galvanized) steel sheet or aluminum-zinc alloy-coated steel sheet pre-painted with coil coating; finished to match metal wall panels. Fabricate in minimum 10-foot long sections, complete with formed elbows and offsets.

1. Mounting Straps: Fabricated from same material and finish as gutters.

G. Pipe Flashing: Pre-molded, EPDM pipe collar with flexible aluminum ring bonded to base.

H. Louvers: Provide framed openings for louvers as shown in RFP documents. Manufacturer shall coordinate with HVAC contractor to provide subsequent sealing of louver penetrations once installed by the HVAC contractor.

2.9 SOURCE QUALITY CONTROL

A. Special Inspector: Owner may engage a qualified special inspector to perform the following tests and inspections and to submit reports. Special inspector will verify that manufacturer maintains detailed fabrication and quality-control procedures and will review the completeness and adequacy of those procedures to perform the Work.
   1. Special inspections may not be required if fabrication is performed by manufacturer registered and approved by the authority having jurisdiction to perform such Work without special inspection.
      a. After fabrication, submit copy of certificate of compliance to the authority having jurisdiction, certifying that Work was performed according to Contract requirements.

B. Testing: Test and inspect shop connections for metal buildings according to the following:
   1. Bolted Connections: Shop-bolted connections shall be tested and inspected according to RCSC's "Specification for Structural Joints Using ASTM A 325 or A 490 Bolts."
   2. Welded Connections: In addition to visual inspection, shop-welded connections shall be tested and inspected according to AWS D1.1/D1.1M and the following inspection procedures, at inspector's option:
      a. Liquid Penetrant Inspection: ASTM E 165.
      b. Magnetic Particle Inspection: ASTM E 709; performed on root pass and on finished weld. Cracks or zones of incomplete fusion or penetration will not be accepted.
      c. Ultrasonic Inspection: ASTM E 164.
      d. Radiographic Inspection: ASTM E 94.

C. Product will be considered defective if it does not pass tests and inspections.

D. Prepare test and inspection reports for record purposes.

2.10 Delivery, Storage, and Handling

A. Site access is via a one-way access road, parts of which are steeply graded. Subcontractor to ensure adequate means of delivery is provided to enable delivery to the site. A site visit prior to delivery is recommended.

B. Ship, deliver, store and handle to prevent damage and in accordance with Manufacturer’s written instructions. Provide factory-installed lifting provisions.

C. Subcontractor to coordinate delivery with project schedule as maintained with construction supervisor.

D. Manufacturer’s storage requirements shall be provided.

E. Subcontractor to indicate in the bid the space requirements needed for on-site storage. The storage sites will be located approximately 200 feet from building site and are indicated on drawing SP-1 (Appendix C) as Staging Area E and W.

F. Off-loading of material delivered to the site is the responsibility of the Subcontractor.

2.11 FABRICATION

A. General: Design components and field connections required for erection to permit easy assembly.
   1. Mark each piece and part of the assembly to correspond with previously prepared erection drawings, diagrams, and instruction manuals.
   2. Fabricate structural framing to produce clean, smooth cuts and bends. Punch holes of proper size, shape, and location. Members shall be free of cracks, tears, and ruptures.

B. Tolerances: Comply with MBMA's "Metal Building Systems Manual" for fabrication and erection tolerances.

C. Primary Framing: Shop fabricate framing components to size and section, with baseplates, bearing plates, stiffeners, and other items required for erection welded into place. Cut, form, punch, drill, and weld framing for bolted field assembly.

D. Secondary Framing: Shop fabricate framing components to size and section by roll-forming or break-forming, with baseplates, bearing plates, stiffeners, and other plates required for erection welded into place. Cut, form, punch, drill, and weld secondary framing for bolted field connections to primary framing.

E. Metal Panels: Fabricate and finish metal panels at the factory to greatest extent possible, by manufacturer's standard procedures and processes, as necessary to fulfill indicated performance requirements. Comply with indicated profiles and with dimensional and structural requirements.

PART 3 – EXECUTION

3.1 INSTALLATION

A. Subcontractor to install building, and all components identified herein and on the design drawings for a weathertight building in accordance with the appropriate manufacturer’s recommended installation procedures and per applicable codes listed herein. In addition, Subcontractor to account for the following:
   1. Arrange and nest sidelap joints so prevailing winds blow over, not into, lapped joints. Lap ribbed or fluted sheets one full rib corrugation. Apply panels and associated items for neat and weathertight enclosure.
   2. Provide weatherseal under ridge cap. Flash and seal roof panels at eave and rake with rubber, neoprene, or other closures to exclude weather.
   3. Field cutting of exterior panels by torch is not permitted.
   4. Roof shall be insulated. Install roof insulation concurrently with installation of panels in accordance with manufacturer's directions. Install blankets straight and true in one piece lengths with both sets of tabs sealed to provide a complete vapor barrier. Locate roof insulation on underside of roof sheets, extending across the top flange of purlin members and held taut and snug to roofing panels with floating clips. Install retainer strips at each longitudinal joint, straight and taut, nesting with roof rib to hold insulation in place.
   5. Install bracing in roof, sidewalls, and endwalls where indicated on erection drawings.
   6. Where dissimilar metals contact each other or corrosive substrates, protect against galvanic action by painting contact surfaces with corrosion-resistant coating, by applying rubberized-asphalt underlayment to each contact surface, or

by other permanent separation as recommended by metal roof panel manufacturer.

7. Install doors and frames according to SDI A250.8.
8. Door Hardware: Mount units at heights indicated in DHI's "Recommended Locations for Architectural Hardware for Standard Steel Doors and Frames."

B. Subcontractor to review proposed installation procedures with the Contractor prior to initiating field construction work.

3.2 FIELD QUALITY CONTROL

A. Special Inspector: Owner may engage a qualified special inspector to perform the following tests and inspections and to submit reports.

B. Testing: Test and inspect field connections for metal buildings according to the following:
1. High-Strength, Field-Bolted Connections: Connections shall be tested and inspected during installation according to RCSC's "Specification for Structural Joints Using ASTM A 325 or A 490 Bolts."
2. Welded Connections: In addition to visual inspection, field-welded connections shall be tested and inspected according to AWS D1.1/D1.1M and the following inspection procedures, at inspector's option:
   a. Liquid Penetrant Inspection: ASTM E 165.
   b. Magnetic Particle Inspection: ASTM E 709; performed on root pass and on finished weld. Cracks or zones of incomplete fusion or penetration will not be accepted.
   c. Ultrasonic Inspection: ASTM E 164.
   d. Radiographic Inspection: ASTM E 94.

C. Product will be considered defective if it does not pass tests and inspections.

D. Prepare test and inspection reports.

END OF SECTION

SECTION 01300

SHOP DRAWINGS AND SAMPLES

PART 1 GENERAL

1.1 LISTING OF ITEMS

Following execution of the Subcontract, the Contractor will submit to the Subcontractor a list of equipment, materials, and other items for which Shop Drawings, layouts, or samples will be required. This listing shall not be construed to be all-inclusive and may be added to, or deleted from, as may be required in the opinion of the Contractor.

1.2 ACCEPTANCE OF MANUFACTURERS OR VENDORS

The Subcontractor, with such promptness and in such sequence as to cause no delay in the Work, shall submit to the Contractor the name of the manufacturer or vendor for each item on the list or addition to the list submitted. No awards shall be made by the Subcontractor, and no work under any item shall proceed, until acceptance of the manufacturer or vendor has been given by the Contractor. Such acceptance will be only on the basis of the manufacturer's or vendor's experience and reputation and will not imply that the Shop Drawings or samples for the item will be acceptable. Review of Shop Drawings for an item will depend upon full compliance with the Contract Documents as demonstrated by material submitted.

1.3 ELECTRICAL INTERCONNECTIONS

Where the Project includes electrical equipment and electrical control systems and where the Work of the Project involves more than one Subcontractor, it shall be the responsibility of the Electrical Subcontractor to coordinate and complete power, control, and electrical signal interconnections for all equipment included in the Project.

1.4 SHOP DRAWING SUBMITTAL REQUIREMENTS

Shop Drawings and data shall be submitted to the Contractor for each item on the latest revised list determined from Section 1.1 above. Submittals shall be made sufficiently in advance of the time when items included therein are to be incorporated into the Work to permit proper review, necessary revisions, and resubmittals without causing a delay in the performance of the Work. The Subcontractor shall allow a minimum period of 5 business days for review of shop drawing submittals by Contractor.

Shop Drawings shall present complete and accurate information relative to all working dimensions, equipment weights, assembly, and section views, and all necessary details pertaining to coordinating the Work of the Contract, lists of materials and finishes, parts lists and the description thereof, lists of spare parts and tools where such parts or tools are required, and any other items of information that are required to demonstrate detailed compliance with the Contract Documents. Drawings for electrical equipment shall include elementary and interconnection diagrams.

Except as otherwise provided, Subcontractor's submittal of Shop Drawings shall constitute Subcontractor's representation that submitted Shop Drawings and the specifications pertaining thereto have been thoroughly reviewed by Subcontractor for consistency with the Specifications and that submitted Shop Drawings strictly comply with the requirements of the Contract Documents; that the Subcontractor has determined and verified all quantities, dimensions, field construction criteria, materials catalog numbers, and similar data, and that Subcontractor has reviewed or coordinated each shop drawing with the requirements of the Work and the Contract Documents. The return to Subcontractor of Shop Drawings stamped "Reviewed" shall in no way relieve Subcontractor from sole responsibility for strictly complying with the specifications in the Contract Documents. Subcontractor shall reimburse Contractor for the costs (including labor costs) and expenses of Contractor's incurred in the review of Shop Drawings which have been twice before returned marked as "Rejected" or "Resubmit".

Unless otherwise permitted in specific cases, all data shall be transmitted to the Contractor by the Prime Subcontractor.

Each shop drawing submitted shall indicate the following:

(a) Project name and contract number

(b) Manufacturer of the equipment

(c) Notation as to whether original submittal or resubmittal

(d) Date received by Subcontractor from manufacturer or vendor

(e) Date submitted to Contractor

Each shop drawing submittal shall be accompanied by a transmittal letter indicating the item or items submitted, with particular reference to latest revised list of equipment, materials, and other items described in 1.1 above and the appropriate section of the Contract Documents to which the items apply. The transmittal letter shall also indicate whether the submittal constitutes a complete set of drawings for the item, a partial set of drawings for which additional submittals are to be expected by the Contractor, or a partial set of drawings to complete a previous submittal. In any case, the Subcontractor shall indicate by the transmittal letters when the submittals for an item are intended to be complete.

The Subcontractor shall submit at least five copies of drawings, catalog data, and similar items for review. This number includes one for return to the Subcontractor. If the Subcontractor desires more than one copy returned to it, it shall submit with the initial and any subsequent transmittals the additional number desired up to a maximum of three copies.

If the Contractor requires additional copies, it will so inform the Subcontractor upon return of the material noted as "Reviewed". Additional copies of "Reviewed" Shop Drawings will be requested in the cases where the subject matter shown thereon requires coordination of two or more prime Contracts. Copies of such drawings, when received, will be retransmitted by the Contractor.

A current file of "Reviewed" Shop Drawings will be maintained by the Contractor and said current file of "Reviewed" Shop Drawings will be at the job site. Any Subcontractor may have access to said "Reviewed" shop drawing file during normal office hours. It shall be the

responsibility of each prime Subcontractor to avail itself of information in said "Reviewed" shop drawing file and to be aware of coordination requirements involving its work in the event it does not receive appropriate Shop Drawings from the Contractor.

1.5 CONTRACTOR'S REVIEW OF SHOP DRAWINGS

The Contractor's review of Shop Drawings is for general compliance with the Contract Documents only and is not a complete check of the method of assembly, erection, construction or detailed review of the specifications. Such review shall in no way be construed as permitting any departure whatsoever from the Contract Documents, except where the Subcontractor has previously requested and received written approval of the Contractor for such departure. When requested by Subcontractor, proposed departures from the Contract Documents will be considered by Contractor at Subcontractor's expense, whether or not accepted. The cost of Contractor's conflict review and any revisions made as a result of Subcontractor's requested departure shall be at the expense of Subcontractor. Subcontractor shall reimburse Contractor for the referenced costs and expenses of Contractor's upon demand.

Review of Shop Drawings by the Contractor will be limited to complete submittals except where review of a partial submittal is specifically requested by the Subcontractor and where such review of a partial submittal is necessary for timely completion of the Work of the Contract. Where Shop Drawings of related items are necessary for review of a particular submittal, the Contractor will so inform the Subcontractor, who will promptly submit such shop drawing of said related items.

Drawings and similar data will be reviewed and stamped by the Contractor as follows:

(a) "Reviewed," if no change or rejection is made. All but four copies of the submitted data will be returned.

(b) "Reviewed and Noted," if minor changes or additions are made but resubmittal is not considered necessary. The Subcontractor may proceed with fabrication, procurement, and installation provided that the Contractor's changes/additions have been incorporated. All but four copies of the submitted data will be returned and all copies will bear the corrective marks.

(c) "Resubmit," if the changes requested are extensive or if retransmittal of the submittal to another Subcontractor is required. In this case, the Subcontractor shall resubmit the items after correction, and before fabrication, procurement or installation. The same number of copies shall be included in the resubmittal as in the first submittal. One copy of the first submittal will be retained by the Engineer and two copies will be returned to the Subcontractor.

(d) "Rejected," if it is considered that the data submitted cannot, with reasonable revision, meet the requirements of the Contract Drawings and Specifications.

1.6 RESUBMITTALS

Any changes, other than those indicated as requested, made in drawings or other data shall be specifically brought to the attention of the Contractor upon resubmittal. Changes or additions shall not be made in, or to, "Reviewed" data without specific notice to the Contractor.

If, after reasonable correction and resubmittal of the Shop Drawings for an item of equipment, acceptance is not given, the Subcontractor shall submit the name of another manufacturer or vendor to supply the item required in accordance with 1.2. Should progress of the Work be delayed by the changing of the manufacturer or vendor, such a cause will not be considered an extenuating circumstance beyond the control of the Subcontractor, and charges for delay if otherwise applicable, will be levied and shall be born solely by the Subcontractor.

1.7 SAMPLES

Samples shall be submitted to the Contractor as required on the latest revised list determined from Section 1.1. The samples shall be properly identified by tags and shall be submitted sufficiently in advance of the time when they are to be incorporated into the Work, so that rejections thereof will not cause delay. A letter of transmittal from the Subcontractor requesting review shall accompany such samples.

The procedures set forth in Section 1.5 and 1.6 above for Shop Drawings shall be used for processing samples.

END OF SECTION

SECTION 09900

FIELD PAINTING

PART 1 GENERAL

1.1 SUMMARY

A. This Section includes Field Painting of all work indicated on the Contract Drawings and specified herein.

1.2 REFERENCES

A. Materials and installation shall be in accordance with the latest revisions of the following codes, standards and specifications, except where more stringent requirements have been specified herein:

1. American Society for Testing and Materials (ASTM)

   a. C2246 - Freeze-Thaw Test
   b. D2247 - Humidity Test
   c. B117 - Salt Spray Test
   d. E84 - Surface Burning Characteristics Test
   e. D16 - Definitions of Terms Relating to Paint, Varnish, Lacquer, and Related Products
   f. D2805 - Contrast Ratio
   g. D1308 - Stain Resistance
   h. D4060 - Abrasion
   i. D4541 - Adhesion
   j. D522 - Conical Mandrel Elongation

2. Steel Structures Painting Council (SSPC)

   a. Steel Structures Painting Manual, Volume 2, Systems and Specifications

1.3 QUALITY ASSURANCE

A. All materials shall remain in their original containers with manufacturer's label intact. Manufacturer's name, product name and number, and color and batch number, shall appear on the label.

B. Manufacturer's representative shall be available to advise applicator on proper application techniques and procedures.

1.4 SUBMITTALS

A. The following items shall be submitted:

1. Manufacturer's descriptive data fully describing each product to include solids by volume and V.O.C. ratings.

2. Manufacturer's certification that all materials furnished are in compliance with the applicable requirements of the referenced standards and this specification.

3. Manufacturer's application instructions.

4. Color charts illustrating range of colors and textures available for selection.

PART 2 PRODUCTS

2.1 MANUFACTURERS

A. The following manufacturers are named to establish a standard of quality necessary for the Project:

1. International Protective Coatings

2. Tnemec Company

3. Or equal

2.2 GENERAL

A. Coatings shall be applied per manufacturer's recommendations.

B. All coordination for compatibility between shop primers, shop finish coats, field coats, and possible tie coats, shall be the responsibility of the Subcontractor.

C. All field surfaces prepared for field painting will be reviewed by the Contractor before coating application begins. However, commencement of field painting by the Subcontractor will indicate Subcontractor’s acceptance of the conditions of the surface and the surface preparation.

D. All coatings specified herein are in addition to shop coatings specified elsewhere.

E. Apply coatings with a brush or a roller. Spray paint only where scheduled or with Contractor's review.

F. Clean damaged shop coatings and retouch before any successive field painting is performed.

2.3 EXTRA STOCK

A. One gallon of unopened paint, in each type and color specified, shall be furnished to the Owner. Multi-component paints shall be supplied as a complete kit.

PART 3 EXECUTION

3.1 PRE-APPLICATION

A. Examine surfaces to be coated and report any conditions that would adversely affect the appearance or performance of the coating systems, and which cannot be put into an acceptable condition by the preparatory work specified.

B. The Subcontractor shall insure that moisture content of surfaces is within manufacturer’s recommendations.

3.2 SURFACE PREPARATION

A. General

1. Remove dust and loose material by dusting, sweeping, vacuuming, or blowing with high-pressure air.

2. Remove oil, wax, and grease in accordance with the manufacturer's recommendations.

3. Verify with Contractor representative that all surfaces to be coated are dry, clean, and free from dirt, dust, wax, grease, or other contaminants.

4. Remove electrical plates, hardware, light fixtures, trim, and fittings prior to preparing surfaces.

5. Shellac and/or seal marks which may bleed through surface finishes that could not be removed.

B. Metals

1. Prepare all non-primed metal surfaces in accordance with the Steel Structures Painting Manual.

a. Sandblasting shall conform to the Steel Structures Painting Council Surface Preparations Specifications for the surface preparation specified or required by manufacturer’s technical application instructions.
b. Before blast cleaning begins, the Subcontractor shall prepare a sample which shall correspond to the photographic standards of SSPC.
c. Proportions of sand, grit, or shot shall be adjusted as necessary to produce a prepared surface equivalent to the reviewed sample.
d. Applications of protective coatings shall be within 8 hours after blast cleaning.
e. Surfaces showing any traces of rust shall be blasted again before application of protective coatings.
f. In areas where assemblies are to receive a sandblasted surface preparation, and portions of the assembly have been previously coated, all prior coatings shall be removed by blast cleaning to the extent necessary for proper adhesion of the specified coating.

2. Shop Primed Metals or Ferrous Metals

   a. SSPC-SP3-Power Tool Clean field connections, welds, burned, and abraded areas to remove rust and contaminants; touch up with specified primer. Feather edges to make patches inconspicuous where exposed to view.

3. Ferrous Metal - Submerged Service

   a. SSPC-SP10 - Near White Blast Clean

4. Ferrous Metal - Non-Submerged Service

   a. SSPC-SP6 - Commercial Blast Clean

5. Non-Ferrous Metal

   a. SSPC-SP1 - Solvent Cleaning

6. Galvanized Metal

   a. SSPC-SP1 - Solvent Cleaning.
   b. SSPC-SP3 - Power Tool Clean, white rust; Care shall be taken not to damage or remove galvanizing.

C. Wood

1. Wipe off dust and grit just prior to painting.

2. Remove or seal all pitch or deposits with a sealer compatible with the finish coating system.

3. Seal knots and sappy sections with a sealer compatible with the finish coating system.

4. Exterior Wood

   a. After prime coat has been applied, fill nail holes with caulking compound suitable for an exterior application, and compatible with the coating system.

5. Interior Wood

   a. After primer has dried, fill nail holes and cracks with wood filler; sand between coats.

3.3 APPLICATION

A. Mix and thin material in accordance with the manufacturer's printed instructions.

B. Allow each coat to dry thoroughly before recoating.

C. Vary color slightly to indicate each successive coating.

D. Cut in edges clean and sharp where work joins other materials or colors.

E. Make finish coats smooth, uniform in color, and free of brush marks, laps, runs, dry spray, overspray, and missed areas.

F. Where clear finishes are required, tint fillers to match wood. Work fillers into the grain before set. Wipe excess from surface.

G. Prime back surfaces of interior and exterior woodwork with primer paint.

H. Prime back surfaces of interior woodwork scheduled to receive stain or varnish finish with gloss varnish reduced 25 percent with mineral spirits.

3.4 UNCOATED MATERIALS AND ITEMS

A. Glazed wall finishes, special coatings, and floor finishes are specified elsewhere.

B. Surfaces not requiring protective coatings:

1. Brass, Aluminum, interior PVC, Bronze, Copper, stainless steel, galvanized structural steel that has not had hot dipped galvanized coating removed, insulated outdoor HDPE piping, insulated outdoor PVC piping.

3.5 SCHEDULE FOR PAINTING AND FINISHING

Legend

(1) Brush or roller application and spray application on metal deck and bar joist ceiling may require two coats to achieve required mil thickness.

(2) Actual film thickness will depend on porosity of surface.

(3) Dry Film Thickness (D.F.T.).

A. Steel-Structural, Tanks, Pipes and Equipment

1. Exterior, Non-Immersion, not insulated

International	D.F.T. (3)
Surface Preparation: SSPC-SP6	
1st Coat: Interseal 670HS	3.0 - 5.0
2nd Coat: Interseal 670HS	4.0 - 6.0
3rd Coat: Interthane 870HS	3.0 - 4.0
	10.0 - 15.0

Tnemec	D.F.T. (3)
Surface Preparation: SSPC-SP6	
1st Coat: N69 Hi Build Epoxoline II	3.0 - 5.0
2nd Coat: N69 Hi Build Epoxoline II	4.0 - 6.0
3rd Coat: 74/75 - Color EnduraShield	2.0 - 3.0
	9.0 -14.0

2. Interior, Non-Immersion

International	D.F.T. (3)
Surface Preparation: SSPC-SP6	
1st Coat: Interseal 670HS	3.0 - 5.0
2nd Coat: Interseal 670HS	4.0 - 6.0
	7.0 -11.0

Tnemec	D.F.T. (3)
Surface Preparation: SSPC-SP6	
1st Coat: N69 Hi-Build Epoxoline II	3.0 - 5.0
2nd Coat: N69 Hi-Build Epoxoline II	4.0 - 6.0
	7.0 -11.0

3. Low Temperature Curing Applications – Exterior (not overlain by insulation)

International	D.F.T. (3)
Surface Preparation: SSPC-SP6	
1st Coat: Intergard 345	3.0 - 5.0
2nd Coat: Intergard 345	4.0 - 6.0
3rd Coat: Interthane 870HS	3.0 - 4.0
	10.0 -15.0

Tnemec	D.F.T. (3)
Surface Preparation: SSPC-SP6	
1st Coat: 161 Tneme-Fascure	3.0 - 5.0
2nd Coat: 161 Tneme-Fascure	4.0 - 6.0
3rd Coat: 74/75 - Color EnduraShield	2.0 - 3.0
	9.0 -14.0

4. Low Temperature Curing Applications – Interior (not overlain by insulation)

International	D.F.T (3)
Surface Preparation: SSPC-SP6	
1st Coat: Intergard 345	3.0 - 5.0
2nd Coat: Intergard 345	4.0 - 6.0
	7.0 -11.0

Tnemec	D.F.T. (3)
Surface Preparation: SSPC-SP6	
1st Coat: 161 Tneme-Fascure	4.0 - 6.0
2nd Coat: 161 Tneme-Fascure	4.0 - 6.0
	8.0 -11.0

B. Galvanized Steel, Non-Ferrous Metal, Roof Deck and Miscellaneous Fabrications

1. Exterior, Non-Immersion

International	D.F.T * (3)
Surface Preparation: SSPC-SP1	
1st Coat: Interseal 670HS	4.0 - 6.0
2nd Coat: Interthane 870HS	3.0 - 4.0
	7.0 -10.0

Tnemec	D.F.T. (3)
Surface Preparation: SSPC-SP1	
1st Coat: N69 Hi-Build Epoxoline II	4.0 - 6.0
2nd Coat: 74/75 - Color EnduraShield	2.0 - 3.0
	6.0 - 9.0

2. Interior, Non-Immersion

International	D.F.T. (3)
Surface Preparation: SSPC-SP1	
1st Coat: Interseal 670HS	4.0 - 6.0
2nd Coat: Interseal 670HS	4.0 - 6.0
	8.0 -12.0

Tnemec	D.F.T. (3)
Surface Preparation: SSPC-SP1	
1st Coat: N69 Hi-Build Epoxoline II	4.0 - 6.0
2nd Coat: N69 Hi-Build Epoxoline II	4.0 - 6.0
	8.0 -12.0

C. Insulated Carbon Steel Pipe

1. Interior and Exterior

International	D.F.T. (3)
Surface Preparation: clean and dry	
1st Coat: Interseal 670HS	5.0 - 6.0
2nd Coat: Interseal 670HS	5.0 - 6.0
	10.0 -12.0

Tnemec	D.F.T. (3)
Surface Preparation: Clean and dry	
1st Coat: 51-792 PVA Sealer	1.5 - 2.0
2nd Coat: N69 Hi-Build Epoxoline II	2.0 - 3.0
3rd Coat: N69 Hi-Build Epoxoline II	2.0 - 3.0
	5.5 - 8.0

D. Wood

1. Interior

International	D.F.T. (3)
Surface Preparation: clean and dry	
1st Coat: Intercryl 530	2.0 - 3.0
2nd Coat: Intercryl 530	2.0 - 3.0
	4.0 - 6.0

Tnemec	D.F.T. (3)
Surface Preparation: Clean and dry	
1st Coat: 113 H.B Tneme-Tufcoat	2.0 - 2.5
2nd Coat: 113 H.B Tneme-Tufcoat	2.0 - 2.5
	4.0 - 5.0

2. Exterior

International	D.F.T. (3)
Surface Preparation: Remove loose paint and caulk, dry	
1st Coat: Intercryl 530	2.0 - 3.0
2nd Coat: Intercryl 530	2.0 - 3.0
	4.0 - 6.0

Tnemec	D.F.T. (3)
Surface Preparation: Remove loose paint and caulk, dry	2.5 - 3.0
1st Coat: 6 Tneme-Cryl	2.5 - 3.0
2nd Coat: 6 Tneme-Cryl	5.0 - 6.0

E. Concrete Block & Porous Masonry

1. Exterior

International	D.F.T. (3)
Surface Preparation: clean and dry	
1st Coat: 895 Unifill Block Filler	
2nd Coat: Intergard 345	4.0-8.0
3rd Coat: Intergard 345	4.0-8.0
	8.0-16.0
	(over filler)

Tnemec	D.F.T. (3)
Surface Preparation: Clean and dry	
1st Coat: 157 Enviro-Crete TX	8.0 - 9.0
2nd Coat: 157 Enviro-Crete TX	8.0 - 9.0
	16.0 -18.0

2. Interior

International	D.F.T. (3)
Surface Preparation: clean and dry	
1st Coat: 895 Unifill Block Filler	-
2nd Coat: Intergard 475HS	4.0 - 8.0
3rd Coat: Intergard 475HS	4.0 - 8.0
	8.0 -12.0 (over filler)

Tnemec	D.F.T. (3)
Surface Preparation: Clean and dry	
1st Coat: 130-6602 Envirofill 100 sq. ft. per gal.	-
2nd Coat: N69 Hi-Build Epoxoline II	4.0 - 6.0
3rd Coat: N69 Hi-Build Epoxoline II	4.0 - 6.0
	8.0 -12.0 (over filler)

3.6 COLOR CODED AND MARKED PIPING

A. All exposed piping shall be painted, color coded, and marked as scheduled.

1. Piping in exposed trenches shall be considered exposed.

2. Markers shall be of an all temperature adhesive tape, suitable for any pipe finish or covering.

3. Printing on markers shall be of sufficient size and style as reviewed by Contractor.

4. A flow arrow shall be installed with each pipe marker at a minimum spacing of 10 ft.

5. Where two colors do not have sufficient contrast to easily differentiate between them, a six-inch band of contrasting color shall be on one of the pipes at 30 inch intervals.

B. On fiberglass, plastic, stainless steel, copper pipe, or other uncoated piping, a combination of wide banding tape and narrow banding tape shall be used for the pipe color and band.

C. Refer to Mechanical Identification Specification 15075 for marking requirements of the piping and duct.

3.7 PIPING COLOR CODE

The following guide is for fluids, where applicable.

A. Water Lines

Raw	Olive Green
Settled or Clarified	Aqua
Finished or Potable	Dark Blue
Fire Water	Safety Red

B. Chemical Lines

Alum or Primary Coagulant	Orange
Ammonia	White
Carbon Slurry	Black
Caustic	Yellow with Green Band
Chlorine (Gas and Solution)	Yellow
Fluoride	Light Blue with Red Band
Lime Slurry	Light Green
Phosphate Compounds	Light Green with Red Band
Polymers or Coagulant Aids	Orange with Green Band
Potassium Permanganate	Violet
Soda Ash	Light Green with Orange Band
Sulfuric Acid	Yellow with Red Band
Sulfur Dioxide	Light Green with Yellow Band

C. Waste Lines

Backwash Waste	Light Brown
Sludge	Dark Brown
Sanitary and other wastewater including storm water	Dark Gray
Treated discharge	Light Gray
Process Vents (indoors and outdoors)	White

D. Other

Compressed Air	Dark Green
Nitrogen Gas	Yellow with Orange Band
Natural Gas	Orange with Black Bands
Propane	Red with Black Bands
Other Lines	As directed

END OF SECTION

SECTION 11390

TESTS ON PUMPING EQUIPMENT

PART 1 GENERAL

1.1 SUMMARY

A. This Section includes requirements for shop hydrostatic testing, shop performance testing, shop mechanical testing, and field running testing for each pump provided, unless otherwise specified.

1.2 REFERENCES

A. Testing shall be in accordance with the latest revisions of the following codes, standards and specifications, except where more stringent requirements have been specified herein:

1. Hydraulic Institute Standards (H.I.S)

1.3 SUBMITTALS

A. In addition to those submittals identified elsewhere in the Contract, the following items shall be submitted:

1. Shop hydrostatic test results, for each pump tested.
2. Shop performance test results, in the form of performance curves certified as to actual test date and witness, for each pump tested.
3. Shop mechanical test results, in written or computer generated form, certified as to the actual test date and witness, for each pump tested. This requirement applies to pumps of 25 horsepower or greater.

PART 2 PRODUCTS

2.1 GENERAL

A. Model Test for Performance will be allowed.

B. Shop testing will not be witnessed by the Engineer or Contractor.

2.2 TEST EQUIPMENT

A. Manufacturer shall furnish materials and equipment including drives required to perform shop test.

B. Subcontractor shall furnish materials and equipment required to perform field test.

PART 3 EXECUTION

3.1 SHOP HYDROSTATIC TEST

A. Hydrostatic pressure test shall be at a pressure equal to not less than twice the specified shut-off head or 150 psi, whichever is greater.

B. The casings and heads shall show no:

1. Undue deflection
2. Sign of weakness
3. Sweating through porous metal
4. Leakage

3.2 SHOP PERFORMANCE TEST

A. Each pump shall be tested at maximum rated speed over a range of operating conditions to develop its performance curves for:

1. Head-capacity
2. Power input (BHP)
3. Efficiency

3.3 SHOP MECHANICAL TEST

A. Each pump of 25 horsepower or greater tested in accordance with H.I.S. standards, shall be found to be within acceptable H.I.S levels for:

1. Vibration
2. Temperature
3. Leakage
4. Rubbing of rotating parts

Shop mechanical testing does not apply to submersible pumps.

3.4 FIELD RUNNING TEST

A. Each pump assembly with its drive unit and auxiliary equipment shall be field tested after installation.

B. Test shall not be started on any pump assembly until a manufacturer's representative is present and has completed the inspection for proper assembly, erection and alignment.

1. Manufacturer's representative shall supply certification of installation.

C. Test shall be conducted by the Subcontractor and the manufacturer's representative and witnessed by the Contractor or Owner’s Representative, and shall demonstrate the following under operating conditions:

1. Pump has been properly installed and has no mechanical defects.
2. Pump is in proper alignment and has been properly connected.

3. Pump is free from undue vibration over the full range of operating conditions.
4. Pump is free from overloading and overheating.

D. Power for testing will be provided by the Subcontractor.

3.5 ACCEPTANCE

A. Acceptance of hydraulic performance shall depend upon satisfactory shop performance test as demonstrated by certified performance curves.

B. Final acceptance of each pumping unit shall depend upon satisfactory operation as demonstrated by the field running test and operation under field conditions.

C. Prior to final acceptance the Subcontractor shall correct all deficiencies.

3.6 FINAL ALIGNMENT

A. After 24 hours of operation the alignment of the unit shall be checked and adjusted, if required.

B. Check the unit for being "pinned", where required.

END OF SECTION

SECTION 15001

MECHANICAL COMPLETION AND COMMISSIONING

PART 1 GENERAL

1.1 SCOPE

This specification defines the responsibilities of both the Mechanical Subcontractor (or Subcontractor) and the Contractor (O'Brien & Gere or OBG) in connection with the work required to make the installation ready for initial operation.

This specification is intended to expand and supplement but not to supersede or vary the general terms and conditions of the Contract. In the event of any conflict between this standard specification and the Contract terms, the Contract terms shall govern.

1.2 DEFINITION OF TERMS

1. Mechanical Completion:
   When referring to the plant, unit, or facility, mechanical completion means that the Mechanical Subcontractor has provided (1) erection in accordance with drawings, specifications, and applicable codes, (2) non-operating adjustments and cold alignment of equipment, (3) installation and inspection of vessel internals and installation of filter media (GAC and MMF), (4) mechanical, hydrostatic, and pneumatic tightness tests, and (5) an inspection check of the installed facilities versus process and instrumentation diagrams (P&IDs) and other Contract Drawings.

   It is recognized that insulation and final cleanup may require completion before the installation is complete. However, at the time of mechanical completion of a unit, a system, or an area, this work need not be complete, but should be in a sufficiently advanced state of completion so as not to unreasonably interfere with subsequent activities.

2. Completion of Construction:
   At completion of construction the Subcontractor has provided erection in accordance with drawings and specifications and other items referred to in the definition of mechanical completion, plus final cleanup.

3. Initial Operation:
   This is the responsibility of the Subcontractor until acceptance by the Contractor.

1.3 SCHEDULES

The Subcontractor will develop a sequence of work schedule with the assistance and concurrence of the Contractor.

So that initial operation may commence at the earliest possible date, insofar as it is reasonably possible, commissioning work should proceed before the entire installation is mechanically complete.

1.4 MECHANICAL COMPLETION: BY SUBCONTRACTOR

This Section of the specification defines the work to be performed by the Subcontractor to achieve mechanical completion. The general outline of mechanical completion work is described

in the following paragraphs. For specific items, refer to the Mechanical Completion Checklist, which follows at the end of this Section.

1.5 ERECTION IN ACCORDANCE WITH DRAWINGS, SPECIFICATIONS, AND APPLICABLE CODES

The Project components shall be erected in accordance with the Contract Drawings and Vendor prints (Shop Drawing released for fabrication) issued for the Project. The work and materials shall be installed in accordance with the project specifications, the Contract Drawings and Vendor's instructions as issued.

Applicable codes as listed in the project specifications shall be followed for materials and workmanship.

1.6 NON-OPERATING ADJUSTMENTS AND COLD ALIGNMENT

The procedure for the completion of field fabrication, erection, and installation as called for on the Contract Drawings, as set forth in the technical specifications, and as outlined in the manufacturer's installation instructions shall also include non-operating adjustments and cold alignment check on equipment such as pumps, blowers, agitators, and miscellaneous special equipment.

A. Equipment Rotation and Alignment:
Before connecting shaft coupling, belting, etc., to the motor driver, the shafts of the driven equipment shall be rotated manually to ensure freedom of movement. Factory coupled drivers and driven equipment shall be uncoupled in the field and both units checked for freedom of rotation.

B. Flanges:
On pumps, fans, and other applicable mechanical equipment and machinery, the flanges shall be fitted up in close parallel and lateral alignment in agreement with manufacturer recommendations prior to tightening the bolting.

C. Pipe Supports:
Spring hangers, including constant support type, shall be checked for proper adjustment of travel and correctly positioned for the cold condition after installation. Hangers which have been set at the factory shall have the travel position checked after installation. Pipe supports, hangers and anchors shall have been installed by the Subcontractor in accordance with the specifications and as shown on the Contract Drawings or as shown on released for fabrication Shop Drawings.

1.7 INSTALLATION AND INSPECTION OF VESSEL INTERNALS

Vessel internals, including but not necessarily limited to agitators, dip pipes and eductors shall be installed by the Subcontractor according to the Contract Drawings, specifications and/or manufacturer's instructions.

Vessel internals, granular activated carbon, and filter media installed in the field by the Subcontractor shall be inspected during erection to ensure proper installation, and a final inspection shall be made by the Contractor.

1.8 INITIAL PACKING OF PUMPS

Wherever temporary packing has been installed by the manufacturer, the Subcontractor shall replace it with service type packing in accordance with specifications.

1.9 INSTALLATION OF SINGLE MECHANICAL SEAL BARRIER SYSTEMS

Single mechanical seal barrier systems for pumps, if provided, shall be inspected for proper tubing connections to seal gland and proper barrier liquid level. Barrier system regulated air pressure shall be set in the presence of the Contractor and system tightness checked at that time.

1.10 MECHANICAL, HYDROSTATIC, AND PNEUMATIC TIGHTNESS TESTS

The testing of pressure vessels and other such items of equipment shall have been conducted by the manufacturer or fabricator in accordance with the codes and specifications under which such equipment has been procured, purchased, and manufactured.

The testing of mechanical equipment, package systems, and machinery shall have been conducted in accordance with the codes and specifications under which such equipment has been procured, purchased, and manufactured.

The testing of instruments, including relief valves, shall have been performed where called for by the specification under which such equipment has been procured, purchased, and manufactured.

Piping and equipment shall be turned over to the Contractor by the Subcontractor, tested and free of residue or waste as outlined in this specification.

1.11 INSPECTION CHECK OF PROCESS AND INSTRUMENTATION VERSUS FLOW DIAGRAMS

An inspection check of process and instrumentation as installed shall be made to ensure proper installation in accordance with the P&IDs, General Arrangement and detailed drawings. Any departures shall be noted on the Contract Drawings and brought to the attention of the Contractor.

1.12 LUBRICANTS

The Subcontractor will review the manufacturer's lubrication recommendations and will advise the Contractor of lubricants to be used.

The Subcontractor will provide all initial operating lubricants not provided by equipment manufacturers.

The Subcontractor will make the initial installation of operating lubricants and will provide a one year supply of replacement lubricants.

1.13 MECHANICAL COMPLETION ACCEPTANCE

When the Subcontractor considers that portions of the installation (a unit, a system, or area) are mechanically complete, the Subcontractor shall notify the Contractor in writing. If the Contractor concurs, he shall promptly approve such notification for that portion, or if he does not concur, he shall promptly notify the Subcontractor in writing of any unfinished work or deficiency to be corrected.

The Subcontractor shall notify the Contractor in writing when all listed exceptions, if any, have been corrected.

When all the Subcontractor's work as defined in this specification has been completed, the Contractor shall approve a final mechanical completion acceptance statement for the entire installation within fourteen calendar days of notification.

1.14 MECHANICAL COMPLETION CHECKLIST – to be modified by Contractor as specific conditions warrant

Tanks:

Mechanical Subcontractor

1. Open and check internals.

2. Clean out for Contractor's inspection.

Contractor

3. Inspect internals and gauging equipment, etc.

Pumps and Agitators:

Mechanical Subcontractor

1. Supply and install proper lubricants.

2. Install packing and/or seals if not factory installed.

3. Check pump and/or agitator rotation manually to ensure freedom of movement.

4. Couple units to drivers after motor has been "bumped" for rotation.

5. Install temporary strainers in suction piping.

6. Make final check of cold alignment.

7. Check all vents, drains, seals, flushing, bypasses, etc. for conformance to specifications and drawings.

8. When necessary, clean pump screens after pumps have been in operation for a reasonable break-in period.

9. Check and run-in pumps and agitators until turned over to the Contractor.

Contractor

10. Check alignments, bearing temperatures, vibration, etc. during flushing operations. Report any malfunctions or off-spec conditions to Mechanical Subcontractor for correction by the Mechanical Subcontractor.

11. Check pumps during run-in, maintain them after turnover, make final hot alignment check. Report any off-spec conditions to Mechanical Subcontractor for correction by the Mechanical Subcontractor.

Instruments:

Mechanical Subcontractor

1. Positive Displacement Flow Meters: Blind off or remove from line during hydrostatic tests and flushing; do not run on water.

2. Gauge Glasses: Clean and check illuminators.

3. Pressure Gauges, Pressure indicating transmitters, in-line probes and devices which will be deleteriously affected by hydrostatic or line pressure testing: Blind off or remove from line during hydrostatic testing of piping systems. Re-install subsequent to testing.

4. Local Thermometers and Thermowells: Thermowells can be installed during the normal construction phase. Temperature indicators (TI's) should be installed after pressure testing and prior to start up.

5. Rupture Discs: Check material against data sheets, install holders and rupture discs. Blind all rupture discs during line testing and remove blinds after testing or install rupture discs after pressure testing is complete.

Safety Valves:

Mechanical Subcontractor

1. Calibrate PSVs, if required.

2. Blind all PSV's during line testing or install after line testing is complete.

3. Remove blinds after testing.

Contractor

4. Inspect all PSV’s for proper installation and operation.

Piping:

Mechanical Subcontractor

1. Perform any special tests and special cleaning or pickling required by drawings and specifications.

2. Hydrostatic, or pneumatic test, all piping as required by drawings and specifications.

3. Provide and install all strainers, both temporary and permanent, figure eight blanks and temporary blanks called for on drawings and specifications or as otherwise required.

4. Make a final P&ID check of the piping system.

5. Perform field painting and install piping and equipment insulation as specified.

6. Supply and install line identification tags and signs.

PART 2 PRODUCTS (NOT USED)

PART 3 EXECUTION (NOT USED)

END OF SECTION

SECTION 15003

EQUIPMENT

PART 1 GENERAL

1.1 SCOPE

This specification establishes the minimum requirements for the installation of equipment. An equipment list will be provided separate from this Specification to indicate equipment to be set under this Contract and equipment to be set by others.

1.2 INTENT OF SPECIFICATION

It is not intended that this specification enumerate every possible eventuality as applied to the equipment, piping, and mechanical systems installations since the Subcontractor shall represent that he understands the site and has full practical construction and erection knowledge and experience in performing equipment installation work in industrial plants. It is the intent that the equipment be installed, tested, and put into condition ready for operation and the Work executed in the best and most workmanlike manner in accordance with the specifications, as described in the following paragraphs, and in conformity with governing codes.

1.3 CODES AND STANDARDS

All components and materials shall be manufactured in accordance with the various codes, standards, or other documents that are mentioned by short form name elsewhere in this specification and are fully identified below. To the extent that these documents apply, the version of the document that is applicable at the time the purchase order is placed shall apply.

Short Form	Complete Identification of the Document
ANSI	American National Standards Institute
API	American Petroleum Institute
ASME	American Society of Mechanical Engineers
ASTM	American Society for Testing and Materials
HI	Hydraulic Institute
OSHA	Occupational Safety and Health Administration
PIP	Process Industry Practices

1.4 FIELD MEASUREMENTS

All equipment locations shall be field measured prior to installation. Any discrepancies between drawings, vendor submittals and field measurements shall be reported to the Contractor. **Any costs for rework resulting from the failure to field measure will be at the expense of the Subcontractor.**

1.5 SUBSTITUTION OF MATERIALS OR EQUIPMENT

Except in specific cases where the words "or equal" or "or approved equal" follow or refer to a maker's name and catalog number or other identifying feature, only such items as are specified or shown on the drawings will be acceptable and no substitutions will be allowed unless they are equivalent to what has been specified.

If the Subcontractor or its vendors wish to use materials or equipment other than those specifically designated herein as being equal to those so specifically designated, BEFORE PURCHASING OR FABRICATION, **the proposed substitution shall be submitted to the Contractor for approval, and the decision of whether or not it is equal to that specified shall be that of the Contractor.**

If the apparatus or material substituted as equal for that specified necessitates changes or additional connections, piping supports, or construction, the same shall be provided and the Subcontractor shall assume the cost and entire responsibility thereof.

Permission by the Contractor to make such substitution shall not relieve the Subcontractor from full responsibility.

1.6 INSTALLATION IN GENERAL

Installation shall consist of:

A. Transporting from the on-site point of receipt or storage and properly positioning the equipment on its foundation or support, located in accordance with the Contract Drawings.

B. Installing shims under bases and sole plates to level the equipment as required and to bring the equipment to the elevation as shown on the Contract Drawings. Where the equipment rests on structural steel and will not be grouted, the shim shall cover at least 50% of the area of the base plate.

C. Securing equipment to the foundation or support. In the case of grouted equipment, the foundation bolts shall be re-tightened after grouting.

D. Assembling component parts in proper relation to each other as described in the manufacturer's installation instructions.

E. Furnish and install all hangers, rods, and miscellaneous structural steel required for supporting and hanging items.

F. Precision alignment of the component parts.

G. Furnish and install all ladders and platforms as identified on the Contract Drawings or in the specifications or in released for fabrication Shop Drawings.

H. Proper lubrication prior to start up or test in accordance with manufacturer's instructions or lubrication lists. Subcontractor shall supply all lubricants.

I. Furnish and install grout as required to properly secure equipment in accordance with the manufacturer's installation instructions.

J. Equipment and Machinery Installation shall be in compliance with PIP RE1E686/API 686 - Recommended Practices for Machinery Installation and Installation Design.

K. Installation of centrifugal pumps shall be in conformance with Manufacturer's installation requirements and ANSI/HI1.4-2000 "American National Standard for Centrifugal Pumps for Installation Operation and Maintenance".

PART 2 PRODUCTS AND INSTALLATION

2.1 MANUFACTURER'S INSTRUCTIONS

Where applicable, the installation of equipment shall be in accordance with the manufacturer's latest published recommendations and instructions.

2.2 INSTALLATION REQUIREMENTS

A. Receiving and Record Keeping

Immediately upon receipt of equipment purchased by the Contractor, the Subcontractor shall notify the Contractor of receipt. All equipment shall be uncrated, inspected, and checked against the shipping papers. Any damages or shortages shall be immediately reported in writing.

If any damage is noted to the equipment prior to unloading, it shall not be unloaded without approval of the Contractor.

Equipment not tagged shall be reported.

The Subcontractor shall sign for and be responsible for the received materials. Any materials lost or damaged shall be replaced by the Subcontractor at his cost.

B. Unloading, Storing, and Receiving

Equipment shall be unloaded by the Subcontractor at the point of delivery, at the site and transported to the point of installation or storage. Small sized equipment shall be stored inside a temporary warehouse. Large equipment may be stored outside but must be adequately blocked and secured. Motors and other parts, which can be damaged by weather, must be adequately protected.

Machined surfaces must be protected to avoid rust or damage. In this connection, machinery closures such as gear boxes, bearings, etc., if not packed with lubricant, shall be so packed by the Subcontractor.

Equipment manufacturer storage requirements, such as routine blower rotation to keep bearings from getting flat spots identified in O&M manuals, shall be the responsibility of the Subcontractor.

C. Direct Coupled Equipment

Prior to startup, but after grout has been placed, all piping connections must be broken and the couplings shall be aligned both face and side with a dial indicator in accordance with the manufacturer's recommendation but with no greater variance than 0.05-mm except that a correction for operating temperatures, as recommended by the manufacturer, shall be applied. After alignment, the piping shall be connected and the alignment checked. The indicator readings shall be the same with the piping connected, and shall be witnessed and signed off by the Contractor's Representative.

E. Belt Driven Equipment

The shafts of the driving and driven equipment shall be parallel. The sheaves shall be aligned by use of straight edge. Belts shall be adjusted to give proper tension prior to startup.

F. Packing Glands and Mechanical Seals

The proper amount and type of packing as specified by the manufacturer or as called for in the item specification shall be installed in each packing gland and the packing gland shall be carefully adjusted for the initial run.

Mechanical seals shall be filled with fluid or grease as specified by the manufacturer or as called for in the item specifications.

G. Safety Guards

Safety guards shall be installed on all exposed couplings, belts, sheaves or at any other place required to insure safe operation.

H. Assembly of Machined Parts

The handling of machined parts shall be done in a manner that will not mar the surfaces, impair clearances, nor impair or prevent parts from functioning properly in the manner for which they are intended. Removal of grease, cosmoline or other rust inhibitor when required to facilitate erection must be followed by proper action taken to coat exposed iron or steel machined surfaces to prevent rust and corrosion and to exclude water, dirt, and other injurious matter from assembled parts until equipment is ready for tests at which time all rust inhibitors which may be objectionable during actual operation must be completely removed.

I. Leveling

Where necessary for good operation, equipment shall be leveled by precision tools working from machined surfaces. Where precision leveling is required a grooved-bottom precision machinist-level, graduated 0.02-mm/M, shall be used and there shall be no visual variance from true level. In all other cases the equipment shall be leveled from equipment nozzle flanges, agitator mounting nozzle, or equipment bases as directed by the use of a flat base level.

J. Grouting

1. Preparing Surface:

   The concrete surface to be grouted shall be thoroughly cleaned to remove all dirt, debris, loose concrete, laitance and other deleterious materials. The surface shall be thoroughly washed and maintained wet for at least thirty minutes and all free water removed by blowing air, siphon, or mopping immediately before placing grout.

2. Placing:

   The grout shall be placed by the gravity fill method and rodded and worked sufficiently to assure filling of all pockets and voids and to assure complete contact with the base being grouted. Filling shall be from one side only. Avoid excessive rodding and puddling beyond that required for complete filling of the space. Where the concrete extends outside the base being grouted the grout shall cover the entire concrete surface and shall be smoothly chamfered at 45 degrees on the edges. The exposed grout surface shall be steel trowel finished.

3. Heavy equipment (*i.e.*, >1,000 lb.) shall not be set sooner than ten days after pouring of foundation.

4. Special care shall be taken that sleeves around anchor bolts are in all cases completely filled with grout before placing grout under base and ring plates and equipment bed plates.

5. Portland cement grout shall be used under all light equipment (*i.e.*, <1,000 lb.) and tanks.

6. Non-shrink grout shall be used under all heavy and rotating equipment. Mixing and application shall be in strict accordance with the manufacturer's directions. Specifications for non-shrink grout proposed to be used by the Subcontractor must be received and approved by the Contractor prior to usage.

K. Lubrication

All rotating equipment, pumps, and agitators shall be greased or filled with oil in accordance with the manufacturer's recommendations.

PART 3 EQUIPMENT LIST

Refer to the provided equipment list. Unless otherwise noted, all equipment to be installed by Mechanical Subcontractor will be purchased by the Contractor.

END OF SECTION

SECTION 15004

MECHANICAL INSTALLATION

PART 1 GENERAL

1.1 SCOPE

This specification establishes the minimum requirements for furnishing and installing process and utility piping (reference specification Section 15225 - Pipe, Pipe Fittings and Valves).

1.2 INTENT OF SPECIFICATION

It is not intended that this specification enumerate every possible eventuality as applied to the piping systems since the Subcontractor shall represent that he understands the site and has full practical construction and erection knowledge and experience in performing piping work in industrial plants. It is the intent that the piping system is installed, tested, and put into condition ready for operation and the Work executed in the best and most workmanlike manner in accordance with the Contract Drawings, specifications, as described in the following paragraphs, and in conformity with governing codes.

1.3 Codes and Standards

All materials and Work performed by this Subcontractor shall as a minimum meet the latest published requirements of the ASME B31.3 Code. All components and materials shall be manufactured in accordance with the various codes, standards, or other documents that are mentioned by short form name elsewhere in this specification and are fully identified below. To the extent that these documents apply, the version of the document that is applicable at the time the subcontract is executed shall apply.

Short Form	Complete Identification of the Document
ANSI	American National Standards Institute
ASME	American Society of Mechanical Engineers
ASTM	American Society for Testing and Materials

1.4 FIELD MEASUREMENTS

All piping shall be field measured prior to fabrication. Any discrepancies between drawings and field measurements shall be reported. Any costs for rework resulting from the failure to field measure will be at the expense of the Subcontractor.

1.5 SUBSTITUTION OF MATERIALS OR EQUIPMENT

Except in specific cases where the words "or equal" or "or approved equal" follow or refer to a maker's name and catalog number or other identifying feature, only such items as are specified or shown on the drawings will be acceptable and no substitutions will be allowed unless they are equivalent to what has been specified.

If the Subcontractor or Subcontractor's Vendors wish to use materials or equipment other than those specifically designated herein as being equal to those so specifically designated, BEFORE PURCHASING OR FABRICATION, the proposed substitution shall be submitted for approval, and the decision of whether or not it is equal to that specified shall be that of the Contractor.

If the apparatus or material substituted as equal for that specified necessitates changes or additional connections, piping supports, or construction, the same shall be provided and the Subcontractor shall assume the cost and entire responsibility thereof.

Permission by the Contractor to make such substitution shall not relieve the Subcontractor from full responsibility for the Work.

1.6 WELDING PROCEDURES AND QUALIFICATIONS

Compliance with this specification and/or Contractor's authorization of Welding Procedure Specifications shall in no way relieve the Subcontractor of the responsibility of providing welds which are sound and suited to the services for which they are intended.

Qualification of the welding procedures to be used and of the performance of welders and welding operators is required and shall comply with the requirements of Section IX of the ASME code and all applicable requirements of the ASME/ANSI B31.3 code for Normal Fluid Service. The Subcontractor shall conduct the required qualification tests and shall not accept a performance qualification made by a welder or welding operator for another employer.

The Subcontractor's QA/QC plan shall be submitted to the Contractor prior to the start of any Work and should include but not be limited to the following:

A. The credentials, experience and qualifications of the Quality Manager the Subcontractor intends to have on-site during the progress of the job.

B. Welding Procedure Specifications:

The Subcontractor shall submit all weld procedures to the Contractor for approval prior to the start of any Work. All welders must be qualified for those procedures.

The Contractor or the Contractor's representative shall have the right to reject any welds in which the details of the Welding Procedure Specifications are not adhered to. All such rejected welds shall be replaced at the Subcontractor's expense.

C. Procedure Qualification Records

1. Welder/Welding Operator Performance Qualifications

Each welder employed by the Subcontractor to do welding on the job shall be qualified for the type and methods of welding he/she will do.

The Subcontractor shall maintain a record of the qualifications of the welders employed and assign each of them an individual number which shall be used to mark the welds. No numbers shall be reassigned. These qualification records, including the welder's assigned number, shall be submitted to the Contractor prior to the start of any Work.

An up-to-date certificate of qualification for each welder shall be on file at the work site and available to the Contractor upon request at any time during the job.

All welds shall be marked by the Subcontractor according to the numbers assigned to the welders by the Subcontractor.

The Subcontractor shall maintain an up-to-date weld map that has at a minimum, an isometric of the piping indicating the location of all welds, the type of weld and the corresponding weld mark. This weld map shall be maintained at the job site and available to the Contractor upon request at any time during the job.

The Subcontractor shall maintain an up-to-date weld inspection log that is to include all records of visual and radiography inspection. The log shall be used to accompany the weld map so that at any time the Contractor may reference the location of any specific weld given the corresponding inspection report.

1.7 MANUFACTURER’S INSTRUCTIONS

Where applicable, the installation of piping, including spacing for hangers and supports, shall be in accordance with the manufacturer's latest published recommendations and instructions.

1.8 INSTALLATION OF INLINE INSTRUMENTATION ITEMS

All tank mounted and inline instruments, including but not necessarily limited to, control valves, automated valves, thermowells, RTD's, temperature indicators, pressure switches, pressure sensors, pressure indicators, level switches, level elements, flow switches, flow elements, conductivity, pH and ORP elements, orifice flanges and meters, conservation vents, dry disconnects, nitrogen gas (inerting) systems, and filter/regulatory gauge assemblies will be installed by the Mechanical Subcontractor. All pneumatic connections will be by this Subcontractor. All electrical connections will be by others. The mechanical Subcontractor shall furnish and install root valves for all pressure tap connections. The Subcontractor shall furnish and install root valves on the instrument air headers as indicated on the drawings. The Subcontractor shall install one isolation ball valve for each instrument requiring a pneumatic connection.

All pressure tap and instrument air root valves shall terminate in a ½-inch threaded female connection.

1.9 DRAWINGS FURNISHED

Process and instrumentation drawings (P&IDs) and mechanical plans and sections shall be the primary tools governing pipe erections. Where discrepancy exists in material content between these documents, the process and instrumentation drawings (P&IDs) will govern. All applicable drawings for this Work are provided in the bid package.

1.10 FABRICATION DRAWINGS

The Subcontractor shall develop fabrication (e.g. “Spool”) drawings for each piping system 3" in diameter and larger. The spool drawing for each system shall consist of an isometric diagram for

individual pipe segments, running lengths, and location of fittings. Dimensional information provided on the spool drawings shall be based on field measurements.

The spool drawings shall be submitted to the Contractor for review prior to installing each piping system. Any deviations from the alignment/configurations presented on the P&IDs or mechanical layout drawings shall be clearly identified.

1.11 RECORD DRAWINGS

As work progresses the Subcontractor shall record on one set of Contract Drawings all changes from the installation originally indicated.

At the completion of the Work the Subcontractor shall transfer the above complete set of record drawings to reproducible sheets and submit those to the Contractor's Representative for approval and record, showing the entire Work as actually installed.

1.12 UNLOADING AND STORING

All materials to be installed under this Contract including those purchased by Contractor shall be unloaded by the Subcontractor at the point of delivery, at the Owner's plant, and be transported by the Subcontractor to the point of installation or storage. All pipe, fittings, and valves over 3-inch in size may be stored outside in the dedicated area, but must be adequately blocked on dunnage and adequately protected from weather and dirt. Piping shall arrive at the site with protective covers on the ends. These covers must remain in place until the piping is installed. Fittings and valves must be covered with polyethylene film. Pipe fittings and valves under 3-inches in size and all gaskets, bolts, specialties and similar items shall be stored inside a temporary warehouse furnished by the Subcontractor. Subcontractor is responsible for security of all piping, equipment, instruments and devices in his control or possession.

PVC, FRP and HDPE equipment, valves, pipe and fittings shall not be stored under direct exposure to sunlight.

1.13 RECEIVING AND RECORDKEEPING

Immediately on receipt of shipment of items purchased by the Contractor, the Subcontractor shall check the quantities of materials on the shipment, and notify the Contractor of receipt.

The Subcontractor shall sign for and be responsible for the received materials. Any materials lost or damaged shall be replaced by the Subcontractor at his cost.

1.14 CLEANLINESS AND RUST PREVENTION

All flange faces, threads, and machined surfaces shall be coated with a rust preventative.

Protection (after thorough cleaning of fabricated pieces) shall be provided by:

A. Open ends being plugged.

B. Threaded ends being capped.

C. Flanges protected by a bolted cover of an approved material.

During fabrication and erection extreme care shall be taken to keep the pipe, valves, and fittings clean.

Protection of open lines or any similar openings against introduction of dirt, water, chips, bolts, screws, tools, etc., during erection shall be by means of pipe caps, pipe plugs, metal or wood covers bolted, wired, or tied in place. Use of rags or waste stuffed in such openings is prohibited.

1.15 EXPANSION JOINT PROTECTION

After expansion joints have been installed, the Mechanical Subcontractor shall provide adequate protection from damage or excessive deformation.

1.16 TEMPORARY HANGERS

Any temporary pipe supports or temporary spacers for inline items required to maintain the construction schedule or as directed shall be provided, installed, and later removed by the Subcontractor.

1.17 TOLERANCE, PITCH, VENT AND DRAIN VALVES

All piping installed shall be plumb and parallel unless a specified pitch is indicated on the drawings, specified, or ordered by the Contractor. For pumping systems in general, piping is to be continuously pitched upwards from the source tank to the pump, and then continuously pitched from the pump to the destination point. Provide ½" diameter holes under tank roof, above normal high water level, in downcomers to serve as an anti-siphon break. Also, provide 3/4-inch drain ball valves at process and chemical piping low points and ½-inch vent ball valves at all high points in pipelines. Vent and drain valves shall also be provided between line isolation valves and particularly on equipment and devices which will require routine servicing and or removal from the pipeline. Although some drain and vent valves are shown on the P&IDs, the required number and locations of each are dependent upon actual fit up to be provided by the Subcontractor. Subcontractor to furnish all vents and drain valves not furnished by Contractor, with valves provided in accordance with specification Section 15225 – Pipe, Pipe Fittings and Valves for the type of piping they are to be installed in. Mechanical Subcontractor to coordinate final requirements for vent and drain valves with the Contractor.

PART 2 EXAMINATION, INSPECTION, AND TESTING

2.1 GENERAL

At a minimum, all piping shall meet the requirements of the ASME/ANSI B31.3 Code for Inspection, Examination and Testing.

All welding shall be subject to visual examination as defined in frequency and method in ASME/ANSI B31.3.

The welded piping systems shall be examined by radiography as defined in frequency and method in the ASME/ANSI B31.3 Code.

The Contractor shall have the option to request the frequency of examination, either visual or by radiography, be increased at any time.

If the results of any weld inspection finds the weld unsatisfactory, the Subcontractor shall have the weld repaired or replaced at his own expense.

Shop welded piping shall be examined, inspected and testing in accordance with this specification.

2.2 PRESSURE TESTING

The Subcontractor shall supply all gauges, relief devices, hoses, and testing equipment required.

All pressure tests shall be complete system tests conducted and documented in the presence of the Contractor's designated representative. All pressure vessels, instruments, and equipment connected to the piping shall be included in the test. Pressure gauges shall not be subjected to pressure in excess of their scale range. All pieces of equipment which do not have their test pressures indicated or whose test pressures are below the piping system test pressure, shall be either disconnected from the piping or isolated by blinds.

Systems to be pressure tested shall be provided with temporary pressure gauges and pressure relieving devices. Permanent relief valves shall be isolated during pressure testing.

Pipes, joints, and appurtenances found to be defective or leaking shall be repaired and retested at no additional cost. Lines shall be vented and drained before any welding is performed.

The Subcontractor shall use plant air, bottled air or bottled nitrogen for pneumatic tests, whichever is appropriate. Hydrostatic tests shall utilize water for test purposes.

All "blinds" or "pancakes" installed between flanges for pressure testing purposes must be equipped with an extended handle that protrudes a minimum of 6-inches beyond the flange or the flange plus insulation. This handle must be painted orange to allow easy recognition.

The pipe schedule (provided separately) specifies the test type and pressure for each piping system unless otherwise noted in the Contract Specifications.

All pressure testing shall be performed in accordance with Section 15992 – Pipe Pressure Test.

2.3 HYDROSTATIC TESTS

Test pressures shall be no less than 150% of the pipe operating pressures. All test pressures shall be maintained a minimum of ten minutes before visual examination of joints begins. Test pressure shall be maintained for a minimum of one-half hour.

Tested systems shall be vented and drained immediately upon successful completion of the test. All process and chemical lines not carrying predominantly water or wastewater shall be dried by passing plant air (or bottled air or bottled nitrogen where appropriate) through them until they are dried to the satisfaction of the Contractor.

2.4 PNEUMATIC TESTS

A preliminary check at not more than 25 psig shall be performed, in accordance with ASME/ANSI B31.3.

All joints shall be checked for leaks by soap and water method.

The test pressure will be at least 110% of the pipe/design pressure. It should be reached by gradual increase to half of the test pressure followed by step increases. The test pressure shall be stabilized and then reduced to 110% of the pipe design pressure and held for a minimum of ten minutes or longer where appropriate.

Tested systems shall be vented immediately upon completion of tests.

2.5 SERVICE LEAK TEST

A preliminary check at not more than 25 psig shall be performed, in accordance with ANSI B31.3.

The pressure shall be gradually increased stepwise to the system pressure using the service fluid as the test medium. All joints shall be checked for leaks visually (liquid systems) or by the soap and water method (gas systems).

2.6 RECORDS

The Subcontractor shall maintain all records of material purchases, field fabrication, welder certification, weld radiographs, evidence of visual examination of welds, and pressure test data.

The Subcontractor's examiner shall provide the Contractor with a certification that all quality control requirements of the ASME/ANSI B31.3 code have been carried out.

All pressure tests shall be witnessed by the Contractor or the Contractor's designated representative, and the pressure test report shall be available at the time of test for signature by the Contractor or his representative upon successful completion of the test.

Pressure test reports shall be filed with the Contractor and contain, as a minimum, the following:

1. Line number or system.
2. Test medium.
3. Test type and pressure.
4. Date, time, and duration of test.
5. System drained.
6. System dried.
7. Temporary equipment, gauges, blinds, etc., replaced or removed.
8. Safety valves replaced.
9. Comments.
10. Mechanical Subcontractor’s signature
11. Signature of Contractor’s representative witnessing the test

Contractor reserves the right to provide forms to be completed by the Contractor in this regard.

PART 3 EXECUTION

3.1 SYSTEM CLEANING AND FLUSHING - GENERAL

The interior of all pipes shall be free from loose mill scale, sand, dirt, slag, weld splatter, rust, and other foreign matter when erected. Slight oxidation is permitted.

After erection and welding of piping, all those lines requiring hydrostatic testing shall be flushed with clean water to the satisfaction of the Contractor, prior to testing.

After erection and welding of piping, all lines requiring pneumatic testing shall be blown free of dirt and debris with clean, dry air to the satisfaction of the Contractor, prior to testing.

During the cleaning process, care shall be taken to ensure the discharge point of the pipe is in a safe location and so arranged that the discharge stream is dissipated harmlessly.

Upon completion of flushing, all lines shall be drained at all low points.

Prior to flushing line cleaning, temporary strainers shall be furnished by the Subcontractor and installed at the suctions of pumps and prior to all metering devices. The strainers shall be removed prior to pressure testing.

3.2 BRANCH CONNECTIONS

Unless otherwise noted in the individual pipe specification line class, branch connections shall be made in accordance with the Branch Charts attached.

TABLE OF BRANCH CONNECTIONS (Carbon Steel and Stainless Steel)

The following table contains the reinforcement requirements for branch connections to pipelines.

	Branch Size, Inches (Nominal Diameter)																			
Pipeline Size	Size	½	3/4	1	1-1/4	1-½	2	2-½	3	4	6	8	10	12	14	16	18	20	24	30
	½	T																		
	3/4	RT	T																	
	1	RT	RT	T																
	1-1/4	RT	RT	RT	T															
	1-½	C	RT	RT	RT	T														
	2	C	C	RT	RT	RT	T													
	2-½	C	C	C	C	RT	RT	T												
	3	C	C	C	C	RT	RT	RT	T											
	4	C	C	C	C	C	RT	RT	RT	T										
	6	C	C	C	C	C	C	C	RT	RT	T									
	8	C	C	C	C	C	C	C	C	RT	RT	T								
	10	C	C	C	C	C	C	C	C	C	RT	RT	T							
	12	C	C	C	C	C	C	C	C	C	RT	RT	RT	T						
	14	C	C	C	C	C	C	C	C	C	RT	RT	RT	RT	T					
	16	C	C	C	C	C	C	C	C	C	C	RT	RT	RT	RT	T				
	18	C	C	C	C	C	C	C	C	C	C	RT	RT	RT	RT	RT	T			
	20	C	C	C	C	C	C	C	C	C	C	RT	RT	RT	RT	RT	RT	T		
	24	C	C	C	C	C	C	C	C	C	C	C	RT	RT	RT	RT	RT	RT	T	
	30	C	C	C	C	C	C	C	C	C	C	C	C	C	RT	RT	RT	RT	RT	T

T = Straight Tee
RT = Reducing Tee
C = Weldolet, Sockolet, Elbolet, or Stub-in in accordance with ASME/ANSI B31.3, reinforced per paragraph 304.3.

3.3 VALVES AND INSTRUMENTS TO BE INSTALLED (LISTINGS PROVIDED SEPARATELY)

Subcontractor to use valve list and instrument list as reference only. Any discrepancies between valve list and P&IDs shall be brought to the Contractor's attention.

END OF SECTION

SECTION 15060

HANGERS, SUPPORTS AND RESTRAINTS

PART 1 GENERAL

1.1 SUMMARY

A. This Section includes hangers, supports, and restraints for mechanical systems including piping, ductwork, and equipment.

1.2 REFERENCES

A. American Society of Mechanical Engineers (ASME):

1. ASME B31.9 - Building Services Piping
2. ASME Boiler and Pressure Vessel Code

B. Manufacturers Standardization Society (MSS):

1. MSS SP-58 Materials and Design of Pipe Supports
2. MSS SP-69 Selection and Application of Pipe Supports
3. MSS SP-89 Fabrication and Installation of Pipe Supports

C. American Society for Testing and Materials (ASTM):

1. ASTM A36 – Specification for Carbon Structural Steel
2. ASTM A167 – Specification for Stainless and Heat-Resisting Chromium-Nickel Steel Plate, Sheet, and Strip.
3. ASTM A480 – Specification for General Requirements for Flat-Rolled Stainless and Heat-Resisting Steel Plate, Sheet, and Strip.
4. ASTM A653 – Specification for Steel Sheet, Zinc-Coated (Galvanized) or Zinc-Iron Alloy-Coated (Galvannealed) by the Hot Dip Process.
5. ASTM A924 – Specification for General Requirements for Steel Sheet, Metallic-Coated by the Hot Dip Process.
6. ASTM B209 – Specification for Aluminum and Aluminum-Alloy Sheet and Plate.
7. ASTM C1107 – Specification for Packaged Dry, Hydraulic-Cement Grout (Nonshrink).

D. Sheet Metal and Air Conditioning Contractors' National Association, Inc. (SMACNA):

1. SMACNA "HVAC Duct Construction Standards."

1.3 SUBMITTALS

A. Product Data: For each type of pipe hanger, channel support system component, and thermal-hanger shield insert indicated.

B. Shop Drawings: Signed and sealed by a qualified professional engineer for multiple piping supports and trapeze hangers. Include design calculations and indicate size and characteristics of components and fabrication details.

C. Welding Certificates: Copies of certificates for welding procedures and operators.

1.4 QUALITY ASSURANCE

A. Welding: Qualify processes and operators according to ASME Boiler and Pressure Vessel Code: Section IX, "Welding and Brazing Qualifications."

B. Engineering Responsibility: Design and preparation of Shop Drawings and calculations for each multiple pipe support, trapeze, and seismic restraint by a qualified professional engineer.

1. Professional Engineer Qualifications: A professional engineer who is legally qualified to practice in jurisdiction where Project is located and who is experienced in providing engineering services of the kind indicated. Engineering services are defined as those performed for installations of hangers and supports that are similar to those indicated for this Project in material, design, and extent.

PART 2 PRODUCTS

2.1 MANUFACTURERS

1. Anvil (Formerly Grinnell)

2. Fee & Mason

3. Crane

4. Erico (Michigan Hanger)

5. Products of the Anvil Company are included in the specifications as a guideline.

2.2 CROSS MEMBERS

A. Structural steel shapes, ASTM A36.

2.3 UPPER HANGER ATTACHMENTS

A. Standard-Duty Beam Clamps (for piping): Malleable iron jaw, steel tie-rod, nuts, and washer. Underwriters Laboratories (UL) listed, Factory Mutual approved. Anvil figures 218, 225, 226. [1365 lbs max]

B. Heavy-Duty Beam Clamps (for large pipe and equipment): Forged steel, Anvil figures 292 and 228. [11,500 lbs max]

C. Welded Structural Attachments: Carbon steel, Anvil figures 55, and 66.

D. Brace Fitting: Malleable iron bracket and pipe end, hex-head cap screw and nut. Anvil figure 112.

E. Wall Brackets: Factory-fabricated carbon steel bracket with knee brace. Anvil figures 194, 195, and 199.

F. Concrete Inserts:

1. Malleable iron inserts, threaded for rod. Anvil figure 152.

2. Carbon steel inserts with lateral adjustment capability. Anvil figures 281, 282, and 285.

G. Concrete Attachments: carbon steel plate with factory-drilled and anchor holes and factory-welded rod attachments. Anvil figures 47, 49, and 52.

2.4 RODS

A. Rods: Carbon steel, ASTM A36, continuous thread or end thread.

2.5 PIPE SUPPORTS AND RESTRAINTS

A. Adjustable Swivel Ring: 3/4-inch through 8-inch pipe, malleable iron construction, black finish, Underwriters Laboratories (UL) listed, Factory Mutual (FM) approved, MSS SP-69. Anvil figure 104.

B. Clevis Hanger: Adjustable clevis, wrought carbon steel, Underwriters Laboratories (UL) listed, Factory Mutual (FM) approved, Anvil figure 260.

C. Roll Hangers: Adjustable steel pipe roll hangers, Anvil figure 181.

D. Roll Supports: Anvil figures 171, 175, 177, 271, 274, and 277.

E. Pipe Guides: Unless otherwise indicated, guides shall be carbon steel spider clamp, sized for insulation. Anvil figure 256 or equal.

F. Insulation Protection Saddle: Carbon steel protection saddle shall prevent crushing of insulation by transmitting hanger contact load to pipe while minimizing heat transfer. Saddle shall be a minimum of 12 inches long and shall cover a 60 degree arc. Anvil figures 160 through 164.

G. Insulation Protection Shield: Sheetmetal protection shield shall prevent crushing of insulation by spreading hanger contact load while minimizing heat transfer. Shield shall be a minimum of 12 inches long and cover a 180 degree arc. Anvil figure 167.

H. Riser clamps: carbon steel; black for steel, iron and plastic pipes; copper-plated for copper pipe; Anvil figures 261 and CT-121.

2.6 DUCTWORK HANGERS

A. Sheetmetal Straps

1. Galvanized steel: ASTM A527, lock-forming quality; and ASTM A525, coating designation G-90.

2. Aluminum: ASTM B209, alloy MLA with H-14 temper.

3. Stainless steel: ASTM A167, Type 302, 304, or 316; and ASTM A480, finish no. 1 or no. 4.

B. Fasteners

1. Sheetmetal screws: same material as duct.

2. Bolts and nuts: steel or galvanized steel, hex-head.

C. Fabricate ductwork hangers in accordance with SMACNA "HVAC Duct Construction Standards."

2.7 FASTENERS

A. Powder-Actuated Drive-Pin Fasteners: Powder-actuated-type, drive-pin attachments with pull-out and shear capacities appropriate for supported loads and building materials where used.

B. Mechanical-Anchor Fasteners: Insert-type attachments with pull-out and shear capacities appropriate for supported loads and building materials where used.

2.8 STRUCTURAL STEEL

A. Structural Steel: ASTM A36, steel plates, shapes, and bars, black and galvanized.

PART 3 EXECUTION

3.1 GENERAL

A. Do not hang, support, or restrain mechanical work from the Pre-Engineered Metal Building structure.

B. Hang, support, and restrain mechanical work from structural supports designated on the Contract Drawings. Do not hang, support, or restrain mechanical work from electrical work or from other mechanical work. Comply with MSS SP-69 and MSS SP-89.

C. Vertical Piping

1. Support vertical risers of piping systems by means of heavy duty hangers installed close to base of pipe risers, and by riser clamps with extension arms at intermediate floors, with the distance between clamps not to exceed 15 feet (10 feet for hubless cast iron pipe), unless otherwise specified. Support pipe risers in vertical shafts equivalent to the aforementioned. Install riser clamps above floor slabs, with the extension arms resting on floor slabs or pipe sleeves. Provide adequate clearances for risers that are subject to appreciable expansion and contraction caused by operating temperature ranges.

2. Support for extension arms of riser clamps which are secured to risers to be insulated for cold service shall be 4 inches above floor slabs, to allow room for insulation and vapor sealing around riser clamps.

D. Use clevis hangers for horizontal runs less than 20 feet long. Use roll hanger and supports for horizontal runs over 20 feet long.

E. Pipe Slopes: Install hangers and supports to provide indicated pipe slopes and so maximum pipe deflections allowed by ASME B31.9, "Building Services Piping," are not exceeded.

F. Insulated Piping: Comply with the following:

1. Attach clamps and spacers to piping.

a. Piping Operating above Ambient Air Temperature: Clamp may project through insulation.

b. Piping Operating below Ambient Air Temperature: Use thermal-hanger shield insert with clamp sized to match OD of insert.

c. Do not exceed pipe stress limits according to ASME B31.9.

2. Install MSS SP-58, Type 39 protection saddles, if insulation without vapor barrier is indicated. Fill interior voids with insulation that matches adjoining insulation.

a. Option: Thermal-hanger shield inserts may be used. Include steel weight-distribution plate for pipe NPS 4 (DN100) and larger if pipe is installed on rollers.

3. Install MSS SP-58, Type 40 protective shields on cold piping with vapor barrier. Shields shall span arc of 180 degrees.

3.2 HANGER SCHEDULE

A. Potable or Plant Cold Water Piping

1. ½ inch to 2 inch - Adjustable ring, wrought carbon steel, black for steel or pipe, copper plated for copper pipe, Anvil figures 97 and CT-99, or approved equal.

2. 2-½ inch to 8 inch - Adjustable clevis, wrought carbon steel, sized for insulation, Anvil figure 260 or approved equal; with insulation protection shield, galvanized carbon steel, Anvil figure 167 or approved equal.

B. Potable or Plant Hot Water Piping

1. ½ inch to 2 inch - Adjustable ring, wrought carbon steel, black for steel or pipe, copper plated for copper pipe, Anvil figures 97 and CT-99, or approved equal.

2. 2-½ inch to 4 inch - Adjustable clevis, wrought carbon steel, sized for insulation, Anvil figure 260 or approved equal; with insulation protection shield, galvanized carbon steel, Anvil figure 167 or approved equal.

3. 6 inch to 8 inch - Adjustable clevis, wrought carbon steel, sized for insulation, Anvil figure 260 or approved equal; with insulation protection saddle, carbon steel, sized for insulation, Anvil figures 160, 161, 162, 163, and 164.

C. Ferrous Gravity Piping

1. 3 inch to 12 inch - Adjustable clevis, wrought carbon steel, black, Anvil figure 260, or approved equal.

D. Natural Gas Piping

1. 3/4 inch to 2 inch - Adjustable ring, wrought carbon steel, black, Anvil figure 97, or approved equal.

2. 2-½ inch to 6 inch - Adjustable clevis, wrought carbon steel, black, Anvil figure 260, or approved equal. Where installed on pipe rack, provide roller chain, Anvil figure 175 or approved equal.

E. Compressed Air Piping

1. 3/4 inch to 2 inch - Adjustable ring, wrought carbon steel, black for steel pipe, copper plated for copper pipe, Anvil figures 97 and CT-99, or approved equal.

2. 2 inch to 6 inch - Adjustable clevis, wrought carbon steel, black for steel pipe, copper-plated for copper pipe, Anvil figures 260 and CT-65, or approved equal. Where installed on pipe rack, provide roller chain, Anvil figure 175 or approved equal.

F. PVC Pipe

1. 3/4 inch to 1-½ inch - Continuous support by structural steel angle. Where insulated, size angle for insulation, and provide continuous shield. Angle lengths shall be buttwelded to form a continuous angle. Suspend angle with adjustable swivel ring, split-ring type, malleable iron, sized for angle and pipe.

2. 2 inch to 12 inch - Adjustable clevis, wrought carbon steel, black, Anvil figure 260, or approved equal.

G. Other Piping Materials not Listed

1. Per manufacturer's requirements.

3.3 PIPE HANGER SPACING

A. Space hangers or supports for horizontal piping on maximum center distances as listed in the following hanger schedules, except as otherwise specified, or noted on the Drawings.

B. Spacings do not apply where concentrated loads are placed between supports. Concentrated loads include flanges, valves, and specialties.

C. Reduce spans by one-fourth where changes in direction occur.

D. For steel pipe carrying water or liquid with specific gravity less than or equal to 1.0, at pressures from 0 to 125 psig and temperatures from 0 to 250 deg F refer to the table below:

PIPE SIZE	SCH. 40 & HEAVIER STL.		SCH. 5 & SCH. 10 SS	
	NON-INSUL	INSUL	NON-INSUL	INSUL
½"	6'-0"	4'-6"	6'-0"	4'-0"
¾"	8'-0"	5'-6"	8'-0"	5'-0"
1"	11'-6"	10'-0"	11'-6"	10'-0"
1-½"	13'-9"	12'-6"	13'-9"	10'-9"
2"	15'-3"	14'-3"	15'-3"	12'-5"
2-½"	17'-0"	15'-9"	17'-0"	13'-9"
3"	18'-6"	17'-3"	18'-0"	15'-3"
4"	22'-3"	20'-0"	19'-3"	16'-3"
5"	24'-0"	22'-0"	20'-0"	18'-0"
6"	26'-0"	24'-0"	20'-6"	19'-3"
8"	28'-9"	25'-0"	19'-3"	21'-3"
10"	31'-6"	25'-0"	13'-6"••	22'-0"
12"	33'-6"	25'-0"	13'-6"••	22'-0"
14"	33'-6"	25'-3"	13'-0"••	22'-0"
16"	25'-6"	26'-0"	26'-0"•	22'-6"
18"	20'-0"	26'-6"	26'-0"•	23'-0"
20"	25'-6"	28'-0"	26'-6"•	23'-3"
24"	32'-3"•	28'-0"	27'-6"•	23'-3"
28"	32'-9 •	28'-3"	28'-0"•	24'-3"
30"	32'-9"•	28'-3"	28'-0"•	24'-3"
36"	33'-6"•	29'-0"	28'-0"•	24'-3"
42"	34'-0"•	29'-6"	28'-9"•	25'-0"

• TO BE SUPPORTED ON SADDLE AND 4" ABOVE THE STEEL
•• TO INCREASE TO 24'-6" IF PIPE IS SUPPORTED ON SHOE

E. For uninsulated standard weight steel pipe carrying air, gas (except fuel gas), or steam at pressures up to 125 psig:

Pipe Size	Spacing
½ inch	7 feet
¾ inch	7 feet
1 inch	9 feet
1-½ inch	12 feet
2 inch	13 feet
2-½ inch	14 feet
3 inch	15 feet
4 inch	17 feet
6 inch	21 feet
8 inch	24 feet
10 inch	26 feet
12 inch	30 feet
16 inch	35 feet
20 inch	39 feet
24 inch	42 feet

F. For steel pipe carrying fuel gas: Space hangers or supports on maximum centers of 6 feet for ½ inch pipe size; 8 feet for 3/4 inch and 1 inch pipe sizes; and 10 feet for 1-1/4 inch pipe size and above.

G. For uninsulated copper pipe and copper tubing carrying liquid with specific gravity of 1.0 or less:

Pipe Size	Spacing
½ inch	5 feet
¾ inch	5 feet
1 inch	6 feet
1-½ inch	6 feet
2 inch	8 feet
2-½ inch	9 feet
3 inch	10 feet
4 inch	10 feet

H. For uninsulated Sch. 80 PVC pipe operating at 70 deg F maximum:

Pipe Size	Spacing
½”	4 ft
¾”	5 ft
1”	5½ ft
1-½”	6 ft
2”	6½ ft
3”	7½ ft
4”	8½” ft
6”	9½ ft
8”	10½ ft
10”	11 ft
12”	11 ft

I. PVC pipe operating above 70 deg F shall have support spacing de-rated per manufacturer’s requirements.

J. For other non-listed pipe; as per manufacturer’s requirements.

K. For Directional Changes: Install a hanger or support close to the point of change of direction of all pipe runs in either a horizontal or vertical plane.

L. For Concentrated Loads: Install additional hangers or supports, spaced as required and directed, at locations where concentrated loads such as in-line pumps, valves, fittings or accessories occur, to support the concentrated loads.

M. For Branch Piping Runs and Runouts over 5 feet in Length: Install a minimum of one hanger, and additional hangers if required by the hanger spacing schedules.

N. Parallel Piping Runs: Where several pipe lines run parallel in the same place and in close proximity to each other, trapeze hangers may be submitted for approval. Base hanger spacing for trapeze type hangers on the smallest size of pipe being supported. Design the entire hanger assembly based on a safety factor of five, for the ultimate strength of the material being used.

O. Support floor drain traps from the overhead construction, with hangers of type and design as required. Overhead supports are not required for floor drain traps installed directly below earth supported concrete or asphalt floors.

3.4 ANCHORS, RESTRAINTS, RIGID SUPPORTS, STAYS AND SWAY BRACES

A. Install pipe anchors, restraints and sway braces, at locations noted on the Drawings. Design anchors so as to permit piping to expand and Contract freely in opposite directions, away from anchor points. Install anchors independent of all hangers and supports, and in a manner which will not affect the structural integrity of the building.

B. In grooved-end piping systems, install restraints, anchors, and rigid supports as recommended by the manufacturer of the grooved-end fittings to ensure proper support

and alignment of the piping under operating and testing pressures (maximum hanger or support spacing shall be as previously specified).

1. Horizontal piping shall maintain a constant pitch without sags, humps, or lateral deflections.

2. Branch piping shall remain perpendicular to main piping and/or risers.

3. Vertical piping shall remain plumb without deflections.

4. Vertical piping shall be rigidly supported, or anchored at both top and bottom and wherever necessary to prevent movement and/or shearing forces at branch connections.

3.5 EQUIPMENT HANGERS

A. Provide vibration isolating hangers for equipment with motors.

B. Support air terminal units independent of ductwork.

3.6 RODS

A. Pipe and duct hanger rods shall be full size to match hangers.

B. Trapeze and equipment hanger rods shall be sized for maximum load with a safety factor of five.

C. Provide two nuts at each end of rods for positioning rod and hanger and locking each in place.

3.7 UPPER HANGER ATTACHMENTS

A. General

1. Upper hanger attachments shall be made to structural steel wherever possible. Attachment of upper hangers to the Pre-Engineered Metal Building frame is not permitted.

2. Powder-driven drive pins shall not be used.

3. Expansion nails shall not be used.

4. Powder-driven fasteners shall not be used in precast concrete.

5. Loads in excess of 250 pounds shall not be supported from a single welded or powder-driven stud.

B. Steel Frame Construction

1. Provide intermediate structural steel members where required by ductwork support spacing. Select members based on a minimum safety factor of five.

2. Secure upper hanger attachments to steel bar joists within 6 inches of panel points, or provide intermediate strut to transfer load to top chord of joist.

3. Holes shall not be drilled in structural steel members.

4. Friction clamps shall not be used.

END OF SECTION

SECTION 15075

MECHANICAL IDENTIFICATION

PART 1 GENERAL

1.1 SUMMARY

A. Pipe Identification Painting.

B. Pipe Identification Markers and Tags.

C. Valve Identification.

D. Duct Identification.

E. Equipment Identification.

1.2 REFERENCES

A. American National Standards Institute (ANSI)

1. ANSI A13.1 - Scheme for the Identification of Piping Systems.

1.3 SUBMITTALS

A. For each product specified submit manufacturer's catalog sheets and specifications showing its compliance with this specification and the referenced standards.

B. Submit, for review, samples of symbols and abbreviations, letter size, color for coding, and a complete list of legend wording proposed for mechanical identification. Do not order or purchase identification materials until samples have been reviewed.

C. Quality Control Submittals

1. Submit manufacturer's installation instructions.

1.4 QUALITY ASSURANCE

A. Identifying labels and markings for piping shall conform to ANSI A13.1 for legend, color, visibility, and size of legend and letters.

1.5 SEQUENCING AND SCHEDULING

A. Complete all testing, insulation, and finish painting prior to executing the Work of this Section.

PART 2 PRODUCTS

2.1 MANUFACTURERS

A. Seton Identification Company, Branford, Connecticut.

B. Brady Corporation, Milwaukee, Wisconsin.

C. Equal

2.2 MATERIALS

A. Pipe Identification Painting

1. Type: As identified in Section 09900 - Field Painting.

2. Color: As scheduled in Paragraph 3.1.

B. Pipe Identification Markers

1. Snap-On Type: Precoiled acrylic plastic marker with clear polyester coating, incorporating flow arrows, and legend printed in alternate directions.

a. Piping or insulation under 6 inch O.D.: One piece wrap around type with 3/4 inch adhesive strip on inside edge and 360 degree visibility.

b. Piping or insulation 6 inch O.D. and larger: Strip type with factory applied grommets, secure with stainless steel spring fasteners.

2. Stick-On Type: One piece pressure sensitive adhesive backed plastic marker with clear polyester coating, incorporating flow arrows, and legend printed in alternate directions.

a. Piping or insulation under 8 inch O.D.: Wrap around type with 360 degree visibility.

b. Piping or insulation 8 inch O.D. and larger: Strip type.

3. Markers shall be color coded based on pipe contents. Color selection shall be according to chart in Part 3 of this Section.

C. Pipe Banding Tape

1. 1- ½ inch width (minimum), pressure sensitive adhesive backed type, of same material as pipe identification marker, and of color to match background color of pipe identification marker.

D. Pipe Service Identification Tags

1. Type: Brass, 19 B&S gage, with 1/4 inch high pipe service abbreviated lettering over 2-inch high pipe size lettering. Lettering shall be deep stamped and black filled. Tag to have 3/16 inch diameter hole at top for fastening.

2. Size: 2 inch square tag.

3. Fasteners: Brass “S” hook or brass jack chain, size as required for pipe to which tag is attached.

E. Valve Identification Tags

1. Type: Brass, 19 B&S gage, with 1/4 inch high valve service abbreviated lettering over 2-inch high lettering indicating valve service chart number. Lettering shall be deep stamped and black filled. Tag to have 3/16 inch diameter hole at top for fastening.

2. Size:

a. Utilities: 1- ½ inch diameter round tag.
b. Plumbing: 1-½ inch hexagon tag.

3. Fasteners: Brass "S" hook or brass jack chain, size as required for valve stem or handle to which tag is attached.

F. Duct and Equipment Identification Letters & Numbers

1. Type: Stick-on type, made of all purpose polyester, single character letters and numbers, specifically designed for outdoor use.

2. Color: Black letters on bright yellow background.

3. Size: Letters and numbers shall be 1 inch or 3 inches in height, as specified.

2.3 ACCESSORIES

A. Valve Service Identification Chart Frames

1. Satin finished extruded aluminum frame of size to fit 8- ½ x 11 inch valve chart and complete with rigid clear plastic glazing.

PART 3 EXECUTION

3.1 PIPE IDENTIFICATION PAINTING

A. General

1. Piping within areas designated below shall be painted with various colors to identify the contents.

2. Paint color shall be in accordance with the Pipe Painting Color Code Schedule found in Paragraph 3.2F, below.

3. If the piping is insulated, then the insulation cover shall be painted for identification purposes and not the pipe below the insulation. EXCEPTION: Do not paint metal insulation jackets, regardless of location.

B. Areas for Pipe Identification Painting

1. Piping within the following spaces or rooms shall be painted:

a. Exposed piping in corridors or other finished spaces which does not have a metal insulation jacket.

C. Application of Paint

1. Prepare and paint designated piping and/or insulation in accordance with Section 09900- Field Painting.

2. Coverage of designated piping or insulation shall be complete and free of streaking of defects.

D. Cleaning

1. Clean adjacent surfaces of paint spatters and drips resulting form the Work of this Section.

3.2 PIPE IDENTIFICATION MARKERS AND TAGS

A. General

1. Piping shall be identified as to content and direction of flow by use of pipe identification markers or tags.

2. Identify all piping, bare or insulated, whose contents match those listed in the Pipe Identification Schedule (Paragraph F, below), with the following exceptions:

a. Piping in furred spaces or above plastered ceilings, except at access panels where valves and piping shall be identified as specified for exposed piping.

b. Piping in finished spaces such as offices, toilet rooms, locker rooms, etc.

3. Marker legend size, field color, and length of field shall be in accordance with ANSI A13.1.

4. Legend wording shall be developed by the Subcontractor and submitted for review (see Section 1.4,C). Whenever possible, standard terminology should be used. Identification by the combination of two or more standard labels (at each identification point) is acceptable.

B. Use of Markers or Tags

1. Pipe or insulation with an outside diameter (O.D.) of 3/4 inch and less shall be identified by the use of Pipe Service Identification Tags.

2. Pipe or insulation with an O.D. larger than 3/4 inch shall be identified by the use of Pipe Identification Markers.

3. Either snap-on or stick-on type markers may be used; except that stick-on markers shall not be used in the following situations:

a. Areas where humid, wet, or dripping conditions are found or likely.
b. Areas where chemical fumes are present or likely.
c. Outdoor installations.

d. On lines subject to 50 degree F temperature variations i.e., outdoors and in unheated portion of building.

C. Location of Markers and Tags

1. Pipe markers and tags shall be located so as to be readily visible from any reasonable point of observation.

2. Locate identification at all valves, branch or riser take-offs, and both sides of pipe passage through walls, floors, and ceilings.

3. On continuous pipe runs locate identification at 20 foot intervals, but not less than one marker or tag on any length of 10 feet or greater.

D. Preparation

1. Insure that any painting is complete and the paint has thoroughly dried before applying identification.

2. Prepare surface in accordance with the manufacturer's instructions for the type of identification used and the surface to which it is applied.

E. Installation

1. Install markers and tags in accordance with the manufacturer's instructions.

2. Secure both ends of stick-on type markers with 360 degree application of pipe banding tape. Tape shall have one inch lap on pipe or insulation.

F. Pipe Identification Schedule: Match existing marking scheme for fluids currently in-use. Refer to the following schedule for new fluids, as required. The Subcontractor shall advise Contractor regarding any conflicts.

Pipe Service	**Label Abbreviation**	**Background Color**	**Letter Color**
MMF and GAC Backwash Waste Discharge	BW	Yellow	Black
Sludge	SL	Yellow	Black
Main Waste Water Process Piping	WW	Yellow	Black
Plant Air	PA	Blue	White
Process Vent	VT	Yellow	Black
Sulfuric Acid	H2SO4	Yellow	Black
50% Sodium Hydroxide	NAOH	Yellow	Black
48.5% Aluminum Sulfate	COAG	Yellow	Black
Polymer	POLY	Yellow	Black

Pipe Service	Label Abbreviation	Background Color	Letter Color
Storm Water	SW	Green	Black
Treated Wastewater	TRWW	Green	Black
Propane	PRO	Yellow	Black

3.3 VALVE IDENTIFICATION

A. General

1. All valves, instruments and devices supplied or installed under this Contract shall be designated by distinguishing numbers and/or letters.

2. Valve instrument and device tag numbers designation shall match the designation, found on the P&IDs and the valve list.

B. Installation

1. Fasten tags to valve stems or handles using “S” hooks or jack chain.

2. Fasten tags in a manner and location that will permit easy reading, but will not interfere with the operation of the valve.

3.4 DUCT IDENTIFICATION

A. General

1. Ductwork shall be identified as to type of air being conveyed and, where specified, the air handling unit to which it is connected by use of stick-on letters and numbers.

2. Identify bare or insulated interior ductwork (outdoor ductwork does not require labeling) in the following locations:

a. Mechanical Equipment Rooms.
b. Penthouses.
c. Ductwork penetrating the roof (below the roof).

B. Location and Content of Identification

1. Locate identification at ductwork connections to equipment and at ductwork roof penetrations.

2. Assemble letters to identify air within the duct as one of the following:

a. “SUPPLY AIR”
b. “RETURN AIR”
c. “EXHAUST AIR”
d. “OUTSIDE AIR”

e. "FUME EXHAUST"

3. In addition, at roof penetrations, include the equipment identification number to which or from which the penetrating duct is connected. For example:

"EXHAUST AIR"	or	"SUPPLY AIR"
"TO EF-12A"		"FROM ACU-301"

4. Horizontal ductwork shall have lettering on opposite sides, along centerline of the duct at each point of identification. Where view of vertical sides is obstructed, apply lettering to be visible from bottom and/or top of duct.

5. Vertical ductwork shall have lettering applied on the two most visible sides, oriented to read from the bottom upward, along the centerline of the duct.

C. Size of Lettering

1. 12 inch or less duct or insulation dimension (or diameter) to which the lettering is applied: 1 inch high lettering.

2. Greater than 12 inch duct or insulation dimension (or diameter) to which the lettering is applied: 3 inch high lettering.

D. Installation

1. Prepare surface to which lettering is applied and install lettering in accordance with the manufacturer's instructions.

2. Apply lettering in a straight line along the axis of the duct. Lettering edges should touch, but not overlap.

3.5 EQUIPMENT IDENTIFICATION

A. General

1. Identify all mechanical equipment, bare or insulated, by use of stick-on letters and numbers.

B. Location and Content of Identification

1. Equipment shall be identified with a minimum of two sets of lettering. Center identification lettering, vertically and horizontally, on opposite vertical sides of the equipment.

2. Vertical sides selected shall have the longest dimension (i.e., label sides of equipment and not the ends), unless view is obstructed to those sides. If view is obstructed to sides of equipment, locate identification lettering on the two most visible vertical sides and/or ends.

3. Equipment identification numbers and letters shall match the designation found on the P&IDs and in the equipment schedules on the Contract Drawings.

C. Size of Lettering

1. Use the largest lettering size (3 inch or 1 inch height) that will easily fit the available surface space.

2. Use only one lettering height on any given piece of equipment (i.e., do not mix lettering sizes).

D. Installation

1. Prepare surface to which lettering is applied and install lettering in accordance with the manufacturer's instructions.

2. Apply lettering in a straight line along the axis of the equipment. Lettering edges should touch, but not overlap.

END OF SECTION

SECTION 15225

PIPE, PIPE FITTINGS & VALVES

PART 1 GENERAL

1.1 DESCRIPTION

A. Applicable provisions of Bidding and Contract Documents shall govern the Work of this Section.

B. Contractor shall mean O'Brien & Gere. Subcontractor shall mean the party responsible for the Work in this Contract.

C. Attachments

1. Pipe Schedule (pending)
2. Valve Schedule (pending)

1.2 SUBMITTALS

A. Required per Section 01300 – Shop Drawings and Samples for materials and equipment provided by the Subcontractor.

1.3 QUALIFICATIONS

A. All pipe and fittings shall be new and marked with manufacturer's name and indicating compliance with applicable ASTM and ANSI Standards.

1.4 SCOPE

A. Installation of indoor piping and outdoor aboveground chemical piping as shown on P&IDs and mechanical plans. Included is the piping to Subcontractor and Contractor supplied equipment and devices. This Subcontractor is responsible for tie-ins at all mechanical tie-in points.

B. Materials to be used in the process piping.

C. Pressure/leakage testing of all piping and equipment installed by the Mechanical Subcontractor plus the remainder/combined portions of piping systems installed by others, except where otherwise called for in the systems specifications. All piping and equipment shall be field-tested for leakage after assembly in accordance with the specification entitled Mechanical Installation.

1.5 APPROVALS

A. Approvals of alternate or substituted materials can only be made by the designated Contractor's representative.

1. Pipe and valve sizes indicated on Contract Documents are to be maintained. Pipe size changes made only as approved by the designated Contractor's representative.

2. Where discrepancy in size occurs, the larger size shall prevail, unless otherwise directed by the designated Contractor's representative. In the event of a conflict with a list or index, the P&IDs shall govern.

PART 2 CODES AND STANDARDS

2.1 PIPING

A. Piping and appurtenances installed under this Section of the specifications shall comply with the requirements of the following where applicable:

1. ASME/ANSI B3 1.3 Code for Pressure Piping

2. ANSI Standards for Pipe and Fittings

3. ASME Code for Unfired Pressure Vessels

4. ASME Code for Power Boilers

5. Factory Mutual

6. American Water Works Association

7. National Plumbing Code

8. ASTM Standards for Pipe, Pipe Fittings, Valves and Materials

9. OSHA

2.2 PRESSURE TESTING

A. Pressure tests shall be made in accordance with the applicable codes and standards including ASME/ANSI B31.3 and as provided for in this and other Specifications, including Section 15004 – Mechanical Installation.

PART 3 - PIPING, FITTINGS, AND VALVES

3.1 PIPING AND FITTINGS MATERIALS SCHEDULE

P&ID Symbol	**System**	**Spec Section**	**Min/Max Exposure Temp ºF**
Sludge	Sludge	PVC	40/<120
PA	Plant Air	C4	-20/< 120

P&ID Symbol	System	Spec Section	Min/Max Exposure Temp ºF
BW	Backwash Waste Discharge	PVC and CS8	40/<120
H2SO4	Sulfuric Acid (93%)	SS7 and TF	-20/<120
WW	Wastewater	PVC and CS8	40/<120
NAOH	Sodium Hydroxide Sol'n (50%)	CS1 and PE	60/<120
COAG	20% Aluminum Sulfate	SS7 and PE	40/<120
VT	Process Duct/Vent systems	Sheetmetal	-20/<100
TRWW	Treated Waste Water	PVC and CS8	40/<120
Poly	Polymer	PE	40/<120

Notes: 1. Maximum working and test pressures identified in Pipe Schedule (provided separately)
2. See attached pipe schedule material specifications.

3.2 PIPING MATERIAL SPECIFICATION DESIGNATION PE

A. General

1. Service: Caustic (NaOH), Polymer (Poly), Alum (Coag)

2. Tubing Design Pressure Rating: 90 psig min. for all sizes.

3. Temperature Range: 30ºF through 120ºF

4. Corrosion Allowance: none.

5. Construction: ¼"-1" OD flexible tubing.

B. Tubing

1. ¼"- 1"

a. Flexible polyethylene thermoplastic tubing, ASTM D-1248, Type I, Class A Category 4, series E Instrument Grade as manufactured by Parker Fluid connectors, or equal.

C. Fittings

1. ¼"- 1"

a. Compression Style for flexible polypropylene construction with plastic gripper for plastic tubing, 220psi, JACO tube compression fittings or equal. Where needed, O-rings to be viton.

D. Flanges: Not applicable.

E. Unions: Not applicable.

F. Valves: Compression style for tubing or NPT (if tubing to pipe thread connectors used), 316SS, 150psi, PTFE seats and packing, PTFE or viton O-rings, JACO, PARKER or equal.

END OF SECTION PE

3.3 PIPING MATERIAL DESIGNATION: CS1

A. General

1. Service: Caustic (NaOH)

2. Pressure Range: 0 PSIG through 150 PSIG

3. Temperature Range: 60ºF through 250ºF

4. Corrosion Allowance: 0.065 inch

5. Construction: ½” - 1” threaded; 1½” - 3” flanged and buttwelded

B. Pipe

1. ½” - 1”

a. Carbon steel, Schedule 80 extra strong, ASTM A106, seamless (Type “S”) threaded end.

2. 1½”-3”

a. Carbon steel, Schedule 40 standard weight, ASTM A53 Grade “B” seamless, buttweld.

C. Fittings: Same material and pressure class as adjoining pipe.

1. ½”-1”

a. Class 3000 forged steel, ASTM A105; screwed.

2. 1½”-3”

a. Carbon steel, schedule 40 standard weight ASTM A234, seamless; buttweld.

i. 90º elbow long radius
ii. 45º elbow
iii. Tee
iv. Reducer concentric
v. Reducer eccentric

vi. Cap
vii. Lateral
viii. Where branch connections are two sizes or more smaller than main size, use of “Weldolets,” “Threadolets” or “Sockolets” is acceptable.

D. Flanges

1. ½”-3”

a. Forged steel, 150 pound class, weld neck or slip on, with raised face, ANSI Standard B16.5.

E. Unions

1. ½”-1”

a. Class 3000 forged steel (ASTM A105) integral stainless steel seats, threaded.

F. Branch Connections (See Table of Branch Connections Section 15004)

1. ½”-1”

a. Class 3000 forged steel ASTM A105

i. Sockolet
ii. Elbolet
iii. Threadolet (for use only where indicated on drawings. Pipe used in threaded joints must be extra strong).

2. 1½”-3”

a. 3000 pound forged steel, ASTM A105.

i. Weldolet

G. Nipples

1. Carbon steel, Schedule 80 extra strong, ASTM A106, seamless (Type “S”) threaded ends.

H. Bolts/Nuts

1. Heavy hex head machine bolts, each with one heavy hex head nut, ASTM A-307.

I. Gaskets

1. Nitrile BUNA -N 1/16” thick for 150 pound flanges, ring type, 50-60 Durometer

J. Joint Material

1. Teflon tape on male threads prior to joining.

K. Safety Shields

1. Polypropylene flanged type (install at all flanged connections).

a. SPRA-GARD or equal.

L. Gate Valve

1. ½”-1”

a. 150 lb., forged carbon steel gate valve, ASTM A105, chromium trim with renewable hard faced seats, solid wedge, rising stem, outside stem and yoke. Stem packing and gaskets to be non-asbestos and unaffected by up to 50% sodium hydroxide solution.

2. 1¼”-2”

a. 150 lb., forged carbon steel gate valve, ASTM A105, chromium trim with renewable hard faced seat rings; bolted bonnet, solid wedge), rising stem, outside stem and yoke. Stem packing and gaskets to be non-asbestos and unaffected by up to 50% sodium hydroxide solution. Valves to have 150 lb. raised-faced flanges ANSI B16.5 and B16.10.

M. Check Valves

1. ½”-1”

a. Forged carbon steel check valve, ASTM A105, horizontal spring-loaded piston type, chromium trim with integral seat, bolted cover with retained stainless steel gasket. Screwed ends ANSI B16.11, rated for 150 lb. min pressure.

2. 1¼” - 3”

a. Cast carbon steel check valve, ASTM A216 Grade WCB, horizontal or vertical swing, chromium trim with renewable seat and disc, bolted cover. Flanged ends, 150 pound ANSI B16.5 and B16.10 raised face.

N. Globe Valve

1. ½”-1”

a. Forged carbon steel globe valve, ASTM A105, hardened integral seat, chromium trim, with renewable plug type disc, bolted bonnet with non-asbestos gasket unaffected by up to 50% sodium hydroxide solution, outside stem and yoke, socket weld ANSI B16.11, 150 lb. minimum rating.

O. Ball Valve

1. ½” - 2” Carbon steel ball valve, AISI C1035. Carbon Steel Trim, TFE seats, screwed ends.

a. Neles-Jamesbury A22TT or approved equal.

P. Hose Coupling

l. ½”-2”

a. Carbon steel quick disconnect coupling, female N.P.T. by male quick disconnect adaptor.

END OF SECTION CS1

3.4 PIPING MATERIAL DESIGNATION: CS8

A. General

1. Service: Backwash Waste Discharge, Wastewater and Treated Wastewater

2. Pressure Range: 0 PSIG through 150 PSIG

3. Temperature Range: 40ºF through 120ºF

4. Corrosion Allowance: 0.062 inch

5. Construction: 4” - 30” flanged and buttwelded

B. Pipe:

1. 4” - 10”

a. Carbon steel, Schedule 40, ASTM A53, Grade “B” seamless (Type “S”) or welded (Type “E”), beveled end.

2. 12”-30”

a. Carbon steel, standard weight, ASTM A53 Grade “B” seamless (Type “S”) or welded (Type “E”), beveled end.

C. Fittings: Same material and pressure class as adjoining pipe.

1. 4”-30”

a. Wrought carbon steel, ASTM A234 Grade WPB, seamless or welded; buttweld, schedule to match pipe.

ix. 90º elbow long radius
x. 45º elbow

xi. Tee
xii. Reducer concentric
xiii. Reducer eccentric
xiv. Lateral

D. Flanges

1. 4”-30”

a. Forged carbon steel, 150 pound class, weld neck, with raised face, ANSI Standard B16.5

E. Branch Connections (See Table of Branch Connections Section 15004 – Mechanical Installation):

1. ½”-1”

a. Class 3000 forged steel ASTM A105

iv. Sockolet
v. Elbolet
vi. Threadolet (for use only where indicated on drawings. Pipe used in threaded joints must be extra strong).

2. 1½”-16”

a. 3000 pound forged steel, ASTM A105

i. Weldolet

b. Stub-in, branch pipe welded into header. Reinforcement in accordance with Paragraph 304.3 of ASME/ANSI B31.3

3. 18”-30”

a. Wrought carbon steel, ASTM A234 Grade WPB, seamless or welded; buttweld, schedule to match pipe

i. Straight or reducing tee

F. Nipples

1. Carbon steel, Schedule 80 extra strong, ASTM A106, seamless (Type “S”) threaded ends.

G. Bolts/Nuts

1. Heavy hex head machine bolts, each with one heavy hex head nut, ASTM A-307.

H. Gaskets:

1. Nitrile BUNA-N 1/16” thick for 150 pound flanges, ring type, 50-60 Durometer

I. Check Valves

1. 4” - 24”

a. Refer to valve list

J. Butterfly Valves

1. 4” - 24”

a. Refer to valve list.

K. Plug Valves:

1. 4” - 24”

a. Refer to valve list.

END OF SECTION CS1

3.5 PIPING MATERIAL CLASS DESIGNATION PVC

A. General

1. Service: Treated Water (TRWW), Wastewater (WW), and Backwash Waste Discharge (BW), Sludge

2. Pressure Range: 0 PSIG through 100 PSIG

3. Temperature Range: 32ºF through 120ºF

4. Construction: ½”-8” solvent welded and flanged

B. Pipe

1. ½”-8”

A. PVC Schedule 80 ASTM D1784, dimensions to ASTM D1785, plain end.

C. Fittings

1. ½”-8”

a. PVC solvent cement socket end, Schedule 80 ASTM D2467.

i. 90º elbow
ii. 45º elbow

iii. Tee
iv. Reducing bushing
v. Reducing coupling
vi. Cap
vii. Plug

D. Flanges

1. ½”-8”

a. PVC 150 pound solvent cement socket end ASTM D2467 (150 pound ANSI drilling).

i. Socket end bore schedule 80
ii. Blind flange

E. Unions

1. ½”-2”

a. PVC solvent cement socket end Schedule 80 ASTM D2467 with Viton Seal.

F. Branch Connections

1. All branch connections use fittings.

G. Bolts/Nuts

1. Carbon steel hexagonal head machine bolts, alloy steel stud bolts, or square head bolts; threaded in accordance with ASTM A193 Grade BT and ANSI B1.1.

2. Heavy hexagonal nuts as per ASTM A194 Grade “2H”.

3. One nut used per bolt.

H. Gaskets

1. All gaskets are to be EPDM, 1/8” thick for 150 pound flange

2. Full face

I. Joint Material

1. All joint material shall be PVC solvent cement ASTM D2564 (solvent cement to be of the same manufacturer as the pipe and fittings) with purple primer, for use with Schedule 80 PVC pipe and fittings (a softening agent [as recommended by the manufacturer] is to be used in the preparation of each solvent-cemented joint).

J. Ball Valve

1. ½”-2”

a. Refer to valve list.

K. Butterfly Valve

1. 3”-8”

a. Refer to valve list.

L. Check Valve

1. 3”

a. Refer to valve list.

END OF SECTION PVC

3.5 PIPING MATERIAL CLASS DESIGNATION DUCT

A. General

1. Service: Process Duct/Vent (VT)

2. Pressure Range: -2” w.c. to 5” w.c.

3. Temperature Range: -20ºF through 100ºF.

4. Construction: 4”-10”

B. Duct: 4"-10"

1. Galvanized Steel: ASTM A527 lock forming quality – galvanizing: ASTM A525 Coating designation G-90. 26 guage spiral duct with 24 gauge fittings.

C. Duct Hangers

1. Strap Hangers: Same material as duct.

2. Rod Type Hangers:
Mild low carbon steel, unless otherwise specified; fully threaded or threaded or threaded each end, with two removable nuts each end for positioning and locking rod in place.

D. Seal Class C

E. Balancing/Isolation dampers specifications pending

END OF SECTION DUCT

3.6 PIPING MATERIAL CLASS DESIGNATION: SS7

A. General

1. Service: 93% Sulfuric Acid, 48.5% Aluminum Sulfate (COAG)
2. Pressure Range: 0 psig through 150 psig
3. Temperature Range: 0ºF through 120ºF
4. Construction: ½”- 3/4” threaded; 1”-12” flanged and buttwelded.

B. Pipe

1. ½”-¾”

a. AISI Type 316L Stainless Steel, Schedule 40, ASTM A312, seamless.

2. 1 “-12”

a. AISI Type 316L stainless steel, Schedule 40, ASTM A312, seamless or ERW.

C. Fittings

1. ½”-¾”

a. AISI Type 316L stainless steel, screwed, 300 lb. ASTM A182.

i. 90º elbow
ii. 45º elbow
iii. Tee
iv. Reducer
v. Cap
vi. Plug, square head (screwed)

2. 1”-12”

a. AISI Type 316L stainless steel schedule 40, seamless or welded, buttweld ends

i. 90º elbow long radius
ii. 45º elbow
iii. Tee
iv. Concentric reducer
v. Eccentric reducer
vi. Cap
vii. Stub end, Type “B”, MSS length

D. Flanges

1. ½”- ¾”

a. AISI Type 316L Stainless Steel, 150 pound, raised face ASTM 182.

i. Threaded

2. 1”-12”

a. AISI Type 316L stainless steel, 150 pound, flat face, to meet ANSI B16.5

i. Slip-on (used with Type “B” stub ends)

ii. Blind flange

E. Branch Connections (See Table of Branch Connections in Section 15004 – Mechanical Installation)

1. All branch connections to use fittings or stub-ends

F. Bolting

1. All bolting shall be stainless steel hex head with one (1) heavy hex nut, ASTM A193 B8/Grade ASTM A194 Grade 8M.

G. Gaskets

1. All gaskets shall be Garlock Envelon 3565 1/16” thick, factory cut for 150 pound raised face flanges, or as otherwise required.

H. Ball Valve

1. ½”-3”

a. Standard port ball valve; filled Teflon (TFE) seat; Teflon (TFE) seals; AISI Type 316L stainless steel body, ball and stem; with buttweld ends. ASTM A193 Grade 7 body bolts; ASTM A194 Grade 2H body nuts; ANSI B16.25 - three-piece design. Valves shall be designed to have a secondary containment enclosure (with “sniffer” port) added onto the valve stem at a future time, or have the standard main valve body replaced within the future with one that embodies a double stem seal system with “sniffer” port.

i. MCF Model SVFR66666-RTBW10 or approved equal.

I. Check Valves

1. ½”- ¾”

a. Cast Type 316 stainless steel (ASTM A351 Grade CF8M) check valve; horizontal or vertical swing type; integral seat; bolted cover with retained Teflon (TFE) gasket; with screwed; rated 150 psig at 500 F.

i. Crane/Aloyco Figure 370, or approved equal.

OR

2. ½”- ¾”

a. Teflon seats Type 316 stainless steel 150 pound ANSI flange insert check valve.

i. Check-All Style FIY-316SS-T or approved equal.

3. 1”-2”

a. Cast Type 316L stainless steel (ASTM A351 Grade CF8M) check valve; horizontal or vertical swing type; integral seat; bolted cover with retained Teflon (TFE) gasket; socket weld ends.

i. Crane/Aloyco Figure 274 or approved equal.

OR

4. 1”-2”

a. Type 316 stainless steel 150 pound ANSI flange insert check valve, Teflon seats

i. Check-All Style FlV-316SS-T or approved equal.

J. Butterfly Valve

1. 3”-12” – on/off service

a. Butterfly valve, lug type, 316 stainless steel (ASTM A744, 351 Grade CF-8M) body, disc, and shaft; seat material Teflon (TFE). Valve designed to fit between Class 150 pound flanges.

i. Neles-Jamesbury 815W113600AE, Durco BX2-W-1-111A-1-V-0 (3”-6”), BX2-W-1-111A-1-V-1 (8”-12”), Keystone K-LOK Figure 360 or approved equal.

END OF SECTION SS7

3. 7 PIPING MATERIAL CLASS DESIGNATION: C4

A. General

1. Service: Plant Air

2. Pressure range: 0 psig through 125 psig

3. Temperature range: 0º F through 200º F

4. Construction: ½”-2” soldered joint

B. Tubing

1. ½”-2”

a. ASTM B88, Type “L” hard temper copper

C. Fittings

1. ½”-2”

a. Wrought copper or cast bronze, solder joint connection ASTM B62 or B75, ANSI B 16.22

i. 90º Elbow
ii. 45º Elbow
iii. Tee
iv. Y45º
v. Reducer
vi. Coupling
vii. Cap
viii. Adaptor (copper x female pipe thread)
ix. Adaptor (copper x male pipe thread)

D. Unions

1. ½”-2”

a. Wrought copper or cast bronze, solder joint connection, ASTM B75 with internal seats

2. ½”-2”

a. Bronze to Iron Dielectric solder joint, female pipe thread, ends. Federal Specification WW-U-531A, 250 psig pressure rating (for connections between dissimilar metals only)

E. Branch Connections

1. All branch connections to use fittings.

F. Joint Material

1. All joint material for hot process water and potable water services are to be 95 tin, 5 antimony, ASTM B32-76 or lead free solder approved by Bristol-Myers Squibb.

G. Ball Valves

1. ½”-2”

a. Bronze ball valve, standard port, teflon (TFE) seats and seals, hard chrome-plated bronze ball and stem. Soldered joints, rated for 150 psig.

i. Combraco Ind., “Apollo” 70-200 or equal to above.

H. Check Valves

1. ½”-2”

a. Bronze check valve ASTM B62, horizontal or vertical swing type, integral seat, screwed cap, solder joint ends for use with ASTM B88 copper tubing, 150 pound pressure rating

i. Crane, Fig. 1342, The William Powell Company, Fig. 158B or equal to above

END OF SECTION C4

PART 4 PIPING ACCESSORIES

4.1 PIPING ACCESSORIES

A. Escutcheon Plates: Steel or cast iron polished chrome, split hinge type with setscrew, when used at ceiling and for other special locations.

B. Pipe Guides: Provide where required, consisting of cylindrical steel guide sleeve, proper length for travel, integral bottom base anchor; top half removable. Split steel spider to bolt to pipe, copper plated spider for copper pipe. Space between sleeve and spider to allow for insulation where required.

Make: Anaconda, Rexonics, Tube Turns or approved equal.

C. Anchors: Same material as pipe. 2" and smaller- Keflex-Mave type BA, or field constructed as approved by Design/Builder. 2½" and larger: - as detailed or directed on job. Provide all required structural members and mount as approved by Contractor.

D. Sleeves

1. Standard Type:

a. Schedule 40 black steel pipe sleeves, two pipe sizes larger than the pipe, required for all structural surfaces.

b. PVC sleeves and sheet metal sleeves permitted only for nonstructural surfaces. Sheet metal sleeves shall be 18 gauge minimum and shall be properly braced to prevent collapsing.

2. Pre-Insulated Type:

a. Adjustable or fixed length metal cans, 24 gauge minimum, sized for 1" spacing between insulation and can. Insulation shall consist of a 360 degree waterproofed calcium silicate insert sized to extend 1" beyond wall or floor penetration. Calcium silicate insert shall be same thickness as adjoining pipe insulation. Spacing between shield and can packed at each end with double neoprene coated rope positively fastened.

1) Make: Pipe Shields Inc., Model WFB-CS--CW for walls and DFB-CS-CW for floors.

E. Sealing Elements

1 . Waterproof Type:

a. Synthetic rubber material with plated bolts equal to "Link'-Seal" Series 200,300 or 400.

F. Waterproof Sleeve

1. Make: Josam Series 26420 or equivalent with flashing clamp and threaded pipe sleeve extension.

PART 5 EXECUTION

5.1 GENERAL

All Work shall be installed in a workmanlike manner as determined by the Contractor.

A. Arrangement and Alignment

1. All piping shall be arranged and aligned in accordance with the drawings. Elevations as given must be held while pitching the pipes to allow pipe to drain. Elevations where given are based on top of finished floor height. Dimensions must be held as closely as possible. All dimensions are to be field checked for accuracy before pipe is fabricated.

2. Install all piping straight and direct as possible, generally forming right angles with, or running parallel with, walls, lines of building, or adjacent piping. All piping shall be neatly spaced with risers and drops running plumb and true.

3. Drawings in general are made to scale. In order to clarify the Work, however, some of the piping may be shown on the drawings slightly out of place, in which case sufficient dimensions or notations are given to indicate the desired arrangement. The Subcontractor shall use figured dimensions and grades, where given, in preference to scaling the drawings. All dimensions, whether figured or scaled, shall be checked in the field by the Subcontractor before final connections are fabricated.

4. Drawings for small diameter piping are in general diagrammatic and the exact location of these lines shall be determined by the Subcontractor from field measurements taken by him. The actual arrangement of the small size piping, when erected, shall follow the general locations shown on the drawings as far as practicable. The installation made in this way shall be neat in appearance, convenient to operate, and shall provide for proper expansion and drainage.

5. Installation of piping systems shall be coordinated with other Work and/or with existing facilities, to avoid blocking building openings, light fixtures, etc. Piping shall not interfere with access to valves or equipment and shall not obstruct passageways. In general, minimum head-room clearance shall be considered as 7’-0” clear minimum under all piping, covering, and appurtenances. Piping shall be installed to provide working clearance for operation and maintenance.

6. All piping must be installed without springing or forcing (except where clearly specified on the Contract Drawings).

7. Make all changes in direction and branch connections with approved fittings.

8. Materials used within a system and between systems shall be consistent. If this is not possible, install approved dielectric fittings.

9. All process, solvent and process waste piping including valves shall be grounded where shown or directed by the Contractor.

B. Modifications and Interferences

1. Subcontractor shall carefully check and become familiar with the architectural, structural, electrical and all mechanical drawings and details, and make note of all locations where walls, partitions, ceilings, structural members, etc. are to be furred or closed-in.

2. Modifications to the arrangement or the piping systems may be required to suit structural conditions, or to avoid interference with the Work of other trades.

3. Contact with any other part of the mechanical or electrical systems is prohibited. Subcontractor shall furnish all offsets, additional fittings, etc., as required and arrange piping to meet installation conditions, easy item removal, and maintenance whether detailed on the plans or not.

4. Any questionable information in the specifications or on the plans shall be called to the attention of the Contractor for clarification before proceeding with fabrication or erection of the parts affected.

C. Pipe Clearance

1. Install piping to provide minimum clearance of at least one inch between extreme projections of piping, flanges, fittings, valves, allowing for insulation, pipe expansion and the like.

D. Pipe Expansion

1. Special attention shall be given to the installation of hot and cold lines which have an appreciable movement so that they will not hit other pipes, structural members and the like when they heat up or cool.

2 Install anchors where shown on the plans or where directed by the Subcontractor.

3. Guides are to be furnished on each side of all expansion loops, offsets, swing joints and expansion joints whether or not detailed on the plans.

4. Cold springing where required shall be done with anchors, hangers, and sliding supports in place.

E. Location of Valves, Etc.

1. System components which require observation, operation or maintenance such as valves, traps, gauges, controls, strainers, dirt pockets, cleanouts, unions and flanges, etc. shall be located whenever possible so as to be readily accessible. Valves which require frequent operation, or which may require emergency operation, and which are not accessible from normal working level, should be installed with appropriate provisions such as chain wheels, or extension stems, ladders, or platforms as determined by the drawings and/or the Contractor.

2. Gear operated valves ≥6”

3. Chain fall operators for valves 6’ above finished floor or grade.

4. Install all valves with stems in either an upright (preferred) or horizontal position. Control valves shall be installed with top works upward unless specifically shown otherwise or already installed on furnished equipment.

5. Globe valves should be installed to seat against the direction of the flow.

F. Drainage and Venting

1. Where lines are purposely pitched for drainage or venting, an accurate grade shall be maintained. Lines shall be supported in such a manner as to prevent deflection of the piping sufficient to pocket the lines.

2. Adequate means of complete draining and venting all units, risers, circuits and systems must be provided.

G. Connections to Equipment and Specialties

1. Piping systems shall be installed complete to equipment connections or other terminal use points.

2. Piping shall be fabricated carefully and accurately to meet connections on equipment without springing the pipe.

3. In some cases the process or use may require different materials for final isolating valve and terminal piping between final valve and equipment. If there are any questions in this respect, Subcontractor shall verify with the Contractor before installing valve and piping.

4. Provide unions or flanges at all piping connections to coils, equipment, control valves, pressure reducing valves, steam traps, etc., at all locations as shown on the drawings, and generally as required to disconnect piping from equipment and apparatus. Arrange connections so that the equipment served may be removed without disturbing the piping. Where valves serve to isolate equipment or specialties, the unions or flanges shall be located between valves and equipment or specialties. Unions shall generally be used for pipe sizes 2” and smaller and flanges for pipe sizes 3” and larger, unless otherwise specified in the detailed piping specifications.

H. Work Cleanliness

1. In addition to general cleanliness to be maintained in the Work area, Subcontractor shall keep stored materials, storage areas, and installed systems free of dirt and debris.

2. All exposed ends of incomplete or unconnected Work shall be temporarily plugged as each phase of piping Work is completed.

5.2 PIPE AND FITTINGS

A. General

1. All pipe sizes referred to in these standards should be interpreted as IPS (iron pipe size) unless specifically designated otherwise, such as outside diameter for tubing.

2. Full lengths of pipe shall be used wherever possible. Short lengths of pipe with couplings will not be permitted.

3. All pipe shall be cut to exact measurement to be installed without forcing (except where cold springing is specifically called for). After cutting, ends shall be reamed and cleaned to eliminate foreign matter.

4. Cutting or other weakening of the building structure to facilitate piping installation will not be permitted.

5. Make all changes in size and direction of piping with fittings. Do not use bends, miter fittings, face or flush bushings, street elbows or field-fabricated reducers.

B. Piping

1. Piping shall comply with the provisions of the latest revision of the ASME/ANSI Code for Pressure Piping, B31.3 - Chemical Paint and Petroleum Refinery.

2. Boiler external piping shall comply with the provisions of the latest revision of Section I of the ASME Boiler and Pressure Code.

C. Welding Fittings

1. Butt-welding fittings shall be manufactured according to ANSI Standard B16.9 (latest edition). Mitered joint elbows and field-fabricated reducers are not permitted.

2. Make all branches with tees except as shown on drawings and in Specification 15004 - Mechanical Installation.

D. Reducing Fittings

1. Use eccentric reducing fittings or eccentric reducing couplings where required to prevent liquid or noncondensable pockets.

2. Bushings shall not be used in steam or condensate return piping. On other services, they should be used only where reducing couplings are not practical as determined by the Contractor.

5.3 HANGERS, INSERTS AND SUPPORTS

A. No piping shall be supported by wires, band iron, chains, or from other piping, nor by vertical expansion bolts. (Support piping with individual hangers from concrete inserts, approved welded supports, or beam clamps of proper configuration and loading design requirements for each

location.) Subcontractor will be required to replace these supports as requested by the Contractor. Follow manufacturer's safe loading recommendations. Obtain approval from the Contractor.

B. Suspend with rods of sufficient length and of size as previously scheduled, using four (4) nuts per rod. Use rods and nuts having electroplated zinc or cadmium (0.005" minimum) finish.

C. Provide additional approved structural and stainless steel members, where required. Structural steel shall be primed with one coat of suitable primer and one coat of rustproof paint.

D. Provide oversided hangers where insulation/supports must pass between pipe and hanger.

E. Hangers, when attached to joists, shall only be placed at the top of bottom chord panel point. concentric type hangers are permissible; "C" type not permitted.

F. Hanger and supports to be provided in accordance with Specification 15060 – Hangers, Supports and Restraints.

5.4 HANGER SHIELDS

A. Provide at all hangers for chilled water, refrigerant, steam (55 psi and over) and other piping where hangers are outside insulation.

B. Pre-insulated type or field-insulated type may be used at Subcontractor's option.

5.5 PIPE SLEEVE

A. General

1. Provide for all pipes passing through floors, walls, partitions, or ceilings. Exception: Not required for existing floors which are core-drilled, except where floor is waterproofed.

a. Pre-insulated type: Required for all chilled water piping and steam (55 psi and over) piping.

b. Standard type: Provide for all piping, except as specified above.

2. Accurately establish grade and elevation of all piping before setting sleeves.

B. Opening Construction

1. Openings must have an internal diameter at least 1" larger than the outside diameter of the pipe for uninsulated lines or of the insulation for insulated services. Holes for sleeves in existing buildings are to be neatly cut.

2. Openings installed in walls or shafts, shall be as small as practical, consistent with insulation, etc., so as to preserve fire rating of shaft walls.

3. Sleeves must be set in place before pouring concrete/laying asphalt or securely fasten and grout-in with cement.

C. Sleeve Construction

1 Interior Partitions and Masonry Walls in process areas: Schedule 10 or greater SS pipe.

2. Exterior Walls in process areas: Schedule 10 or greater SS pipe.

3. Interior Floors in process areas: Primed and painted standard weight carbon steel pipe.

4. Non-process areas: Primed and painted standard weight carbon steel pipe.

D. Sleeve Installation

1. Install sleeves through interior walls and partitions flush with finished surfaces; sleeves through outside walls are to project ½" on outside of the finished wall.

2. Sleeves are to project 9" above finished floors or as otherwise specified or shown in the Contract Documents. Floor sleeves in secondary containment areas shall extend above the elevation of the top of the containment walls.

3. Where floors are membrane waterproofed, use flashing clamp device on sleeves equivalent to Josam Series 1880 "Riser Sleeve".

4. Provide escutcheons on both sides of the penetration through the structure for all pipes exposed to view passing through walls, floors, ceiling, and partitions, whether or not insulated. For pipes passing through floors, escutcheons shall fit over the sleeves.

5. Where piping must pass through ducts, air chambers, or built up housings provide rubber grommet seals. This is an exception. Each instance must be approved by the Contractor.

E. Sleeve Packing

1. Tightly seal void space at all sleeves throughout building as follows (unless otherwise shown or specified).

a. Interior locations: Firmly pack with fiberglass, the space between sleeve and pipe, then neatly caulk with caulking gun and approved material.

b. Exterior walls above grade: Use sealing element specified or required subject to prior approval of Contractor.

c. Exterior walls below grade: Use sealing element specified or required subject to prior approval of Contractor.

d. Cored holes: Method shall be approved or use sealing element specified.

e. Fire rated, partitions and floor slabs: Use fire rated sealing elements, materials and methods approved beforehand by Contractor.

f. Waterproofed floors without membrane: Use Contractor's approved sealing element, device or compound.

g. Waterproofed floors with membrane: Use Contractor's approved sealing element, device or compound.

2. Escutcheon Plates

a. Provide polished chrome or stainless steel escutcheon plates for all exposed piping passing through floors, walls or ceilings, in all rooms except.

3. Miscellaneous Accessories

a. Obtain Contractor's approval or exact method of installation.

5.6 CONNECTIONS/JOINTS

A. General

1. Ream pipes after cutting.

2. Clean pipe and fittings before installation.

B. Screwed Joints

1. Cut threads full and clean with sharp dies.

2 Ream ends of pipe after threading and before assembly, to remove burrs.

3. Make tight joint leaving not more than three pipe threads exposed at each connection.

4. Use approved joint sealant or tape on make threads only.

C. Flanged Joints

1. Flange dimensions and drilling are to conform to ANSI Standards for the pressure classes involved.

2. Where a cast iron, flat-faced joins a steel flange, the steel flange must also have full, flat face. Use full face gasket.

3. Mate raised-face flanges to raised-face. Use ring type gasket.

4. Install Ramco safety shields on all flanges and connections where specified. The shield should be of type Ramco Teflon Spra-Gard rated for 150 psig or approved equal. The shield should be installed per manufacturer's recommendations and shall meet all OSHA requirements.

D. Compression Joints

1. Cut ends of pipe square.

2. Remove all burrs on inside and outside of pipe.

3. Clean joint contact surfaces with steel wool before assembly.

4. Assemble joint in accordance with Manufacturer's instructions.

E. Grooved End Joints

1. Cut grooves clean and sharp without burrs or check marks.

F. Solder Connections

1. Use only nonacid flux and clean off excess flux. Also remove excess solder from piping.

G. Dielectric Fittings

1. Provide dielectric pipe fittings, pipe guides and anchors, where called for on the Contract Drawings or in the Specifications.

2. Provide dielectric fittings between ferrous and copper piping.

3. Provide dielectric fittings between buried piping and above-ground piping where shown on the Contract Drawings.

4. Protect fittings from excessive heat.

5.7 SPECIFIC SYSTEM

A. Vent Systems

1. Contractor shall install process vent piping to slope to drain.

PART 6 TESTING

6.1 GENERAL

A. Test all pipe before painting, insulating, or concealing.

B. Test at pressures and for duration as specified.

C. Test entirety or by isolated sections as directed and required by job progress.

D. Repeat tests as many times as necessary to prove tight system.

E. The Contractor is to witness all tests including joint inspection and all tests must be made to his satisfaction.

F. The Subcontractor is to furnish necessary pumps, gauges, equipment, power and labor for testing.

G. The Subcontractor is to remove and replace defective fittings, pipe or connections.

H. The Subcontractor is to make leaks tight; no caulking permitted.

6.2 ISOLATION

A. Isolate or block off all equipment such as expansion joints, instruments, filters, etc. whose maximum permissible pressure is lower than test pressure.

B. Equipment such as vessels, heat exchangers, pumps, compressors and the like shall be isolated during testing of the piping system.

C. When it is necessary, for practicality, to include a vessel or other equipment, the test pressure shall not exceed the allowable cold limit of the equipment. Inclusion of the equipment in the test shall not be done without approval of the Contractor.

D. Relief valves and rupture discs shall be removed or blanked off prior to testing.

E. Orifice plates shall not be installed until after testing is completed.

6.3 PRECAUTIONS

A. Control valves shall be set to the wide open position during the test.

B. Lines containing check valves shall have the source of test pressure on the upstream side.

C. Lines supported by springs shall be blocked up temporarily as needed to sustain the liquid load.

D. Vent all air from the system for hydrostatic testing.

E. Place temporary strainers in lines before equipment items to prevent construction and fabrication debris from contaminating and damaging equipment.

END OF SECTION

SECTION 15250

MECHANICAL INSULATION

PART 1 GENERAL

1.1 SUMMARY

This Section includes all the requirements for providing mechanical insulation on outdoor process piping carrying water or chemicals that may freeze at outdoor ambient temperatures. Mechanical insulation shall also be provided on indoor process pipe carrying caustic and alum.

1.2 SUBMITTALS

The Subcontractor shall submit the following to Contractor:

A. For approval:

1. Product data for each type of mechanical insulation identifying K-value, thickness and accessories.

2. Product data for, labeling, adhesives, sealant(s), coverings and jacketing.

PART 2 PRODUCTS

2.1 PIPE INSULATION

A. Exterior water piping insulation shall be Polyisocyanurate foam supplied in the form of bunstock for fabrication to meet insulation applications or approved equal. Provided insulation shall meet or exceed the representative physical properties of Dow-Trymer 2000 brand at 74°F.

B. Insulation thickness shall be 2-inches unless otherwise specified, shown, directed or as recommended by insulation manufacturer.

2.2 GENERAL

A. All insulation material, media used to apply insulation, and jacketing material shall have a maximum flame spread of not more than 25 and fuel contributed and smoke developed ratings of less than 50 using ASTM C84 Smoke Generation

PART 3 EXECUTION

3.1 PIPE INSULATION

A. All pipe insulation shall be installed in accordance with the insulation manufacturer’s procedures after the piping has been satisfactorily pressure tested, and the surface is dry, clean and painted (if required).

B. All insulation shall be continuous through walls.

C. The insulation for all pipe sizes shall be protected at all support points by pipe saddles or insulation shields.

D. Polyisocyanurate foam shall be provided as follows:

1. Insulation shall be installed with approved adhesive and joints caulked with approved sealant. Insulation shall then be wrapped with a vapor covering. Provide an aluminum jacket (.20 ga.) covering over the wrapping.

2. Where new to existing piping/insulation connection(s)are made, seal the end of the polyisocyanurate foam and provide aluminum jacket overlapping the existing aluminum jacket. Seal all jacket joints in accordance with manufacturer's recommendations utilizing manufacturer's recommended materials.

3.2 IDENTIFICATION

All new insulation shall be identified as non-asbestos. Identification labels shall as specified in Section 15075 – Mechanical Identification.

END OF SECTION

SECTION 15992

PIPE PRESSURE TESTS

PART 1 GENERAL

1.1 SUMMARY

A. This Section includes pipe pressure tests for interior building services piping systems (and outdoors aboveground chemical piping) as scheduled in Part 3 of this Section.

1.2 SUBMITTALS

A. In addition to those submittals identified, the following test reports shall also be submitted:

1. A separate test report shall be submitted for each pressure test performed.
2. Information presented in test reports shall be typewritten, clear, concise, and accurate.
3. Reports shall be signed and dated by the supervisor in charge of performing the test and designated Inspector. Signatures shall certify that all information contained in the report is true and accurate to the best of the signatory's knowledge.
4. Reports shall contain, as a minimum, the following information:

   a. Type of test performed (e.g., hydrostatic, pneumatic, etc.)
   b. Description of system, or portion of system to which testing was performed.
   c. Date of test.
   d. Time of pressure start.
   e. Time of pressure test completion.
   f. Test fluid used in test (e.g., tap water, dry air, etc).
   g. Pressure reading at beginning of test.
   h. Pressure reading at end of test.
   i. Location of pressure indicating devices.
   j. Precise location of leaks detected.
   k. Summary of leaks detected and suggested corrective action.
   l. Conclusions regarding overall fitness and condition of tested system.
   m. Signatures as described above.
   n. Appendix: Calibration history of instruments used.

1.3 REFERENCES

A. Perform pressure tests on piping as scheduled below and in accordance with Plumbing Code Requirements as applicable.

1.4 QUALITY ASSURANCE

A. Tester's Qualifications

1. Workers and their supervisors performing the Work of this Section shall be personally experienced in testing of pipe systems and shall have been regularly employed by a company with three years minimum experience in testing of similar pipe systems.

B. Inspection

1. Tests shall be performed by the Subcontractor in the presence of designated Inspector(s). Witness and signoff is required.

2. Inspectors shall, at all times, have access to any place where Work is in preparation or in progress and Subcontractor shall provide sufficient safe and proper facilities for such access and inspection.

1.5 SCHEDULING AND SEQUENCING

A. Perform test operations on complete piping system or in sections as required and/or directed to progress Work in satisfactory manner and not delay the general construction of the Project.

B. If testing is performed in sections, valve or cap-off sections of piping to be tested, utilizing valves to be installed in permanent piping systems or temporary valves or caps as required to perform tests.

C. Transmit written notification of proposed date and time of pressure tests to the Owner's Representative at least five days in advance of such tests.

D. Pressure tests shall be performed prior to the installation of piping insulation or coverings.

E. Pressure tests on underground piping shall be performed when piping has been partially backfilled with joints exposed.

F. Pressure tests shall be performed prior to initial operation of piping systems.

PART 2 PRODUCT

2.1 TEST MATERIALS

A. Test Fluid: Where scheduled, test media shall meet the following criteria.

1. Non-Potable Water: Raw water or non-potable cold water.
2. Potable Water: Treated, chlorinated potable water.
3. Air: Filtered, oil-free, dry compressed air supplied at or above indicated test pressure.

2.2 TEST EQUIPMENT

A. Gauges: Calibrated, dial-type, suitable for use with specified test fluid. Upper limit of gauge pressure range shall be 1.33 times the specified test pressure. Gauge accuracy shall be 1 percent of the indicated reading or better.

B. Soap Solution: American Gas & Chemical, “Leak-Tec”, or equivalent.

C. Air Compressor: Unit rated to supply compressed air at or above required test pressure. Unit shall have necessary filters and driers to deliver clean, oil-free, dry compressed air. Unit shall have shut-off valve installed on discharge connection.

D. Pressure Relief Valve: Suitable for use with compressed air, set to relieve at 10 to 15 percent above designated test pressure.

PART 3 EXECUTION

3.1 GENERAL

A. Tests shall be conducted at ambient temperature, unless otherwise specified.

B. Do not use permanent system pressure gauges for pressure testing; remove and plug or isolate such gauges from the system during pressure tests.

C. Instrumentation in, or attached to, the piping being tested shall be protected during testing by isolation or removal. Return instrumentation to pre-test condition after completion of pressure testing.

D. Piping connected to specialties or equipment with a lower pressure rating than the specified test pressure shall be disconnected from the equipment (after the isolation valve) and openings plugged during the pressure test. After the completion of pressure testing, the piping shall be reconnected to the equipment.

E. Expansion joints shall be provided with temporary restraint or blocked off during testing.

F. Pressurization of piping systems by liquids or gases shall be executed in a slow and prudent manner to maintain safety, avoid over-pressurization, and avoid excessive leakage.

G. Piping systems designed for gases that are tested with a liquid may require additional temporary support during tests to support the weight of the liquid. Provide extra support as required.

H. If the piping fails the test requirements, the Subcontractor shall determine the cause of leakage, make necessary repairs, and retest the piping. This procedure shall be repeated until the piping complies with test requirements. A separate test report shall be submitted for each test to a piping system or section of piping.

I. No caulking or putty shall be used in the repair of leaks. Back-welding of threaded joints shall not be permitted as a means of repairing leaks.

J. Test reports shall be filled out and readings recorded as testing proceeds.

K. Safety glasses and hard hats shall be worn by personnel involved in or witnessing tests conducted at pressure of 20 psig or greater.

3.2 EXAMINATION

A. Examine equipment and construction in the area of piping to be tested. Note equipment and existing construction that may be damaged by leakage of the test fluid.

B. Verify that piping system bracing, alignment harnesses, and thrust restraints are in place before pressure is applied. Concrete restraints shall have cured adequately to withstand test pressure.

3.3 PREPARATION

A. Protect equipment and construction that may be damaged by leakage of test fluid by covering with appropriate material or removing from area.

B. Verify that piping to be tested is clean and all outlets in the system are closed.

C. Open non-outlet valves in piping section to be tested. Check valves that can prevent system sections from being filled or pressurized shall have their discs, etc. removed for testing (restore check valves to their pre-test) condition after completion of pressure testing).

D. Evacuate test areas of personnel not involved in the pressure testing.

3.4 HYDROSTATIC PRESSURE TEST

A. Install pressure gauge to measure system pressure at low point in system.

B. Connect pressurization pump to system.

C. Fill the system with test liquid, opening vents to permit complete filling. Close vents.

D. Using the pump, raise the pressure in the system to the scheduled test pressure. Hold pressure for a minimum of one hour.

E. Reduce and hold the pressure 20 percent below test pressure. Inspect the entire system for visible leaks. Note location of leaks for repair.

F. If leaks or defects are found, release the pressure, drain the system, and make repairs. Repeat the test procedure on the repaired piping.

G. If the piping shows no visible leakage, raise the pressure in the system to the scheduled test pressure and isolate the system, under pressure, from the pump. The system should be closed with the pressure gauge indicating test pressure within system.

H. System shall remain pressurized for the duration indicated in the test schedule. After the specified duration, check pressure reading on system gauge. No detectable drop in pressure shall have occurred in the system.

I. If a drop in pressure occurs, Subcontractor shall determine cause. Once cause is determined release the pressure, drain the system, repair pipe as necessary, and retest.

J. Upon compliance with test requirements, drain the system, remove items added or replace those removed for testing.

K. Connect air supply to blow out any remaining liquid in the piping after it has been drained.

3.5 PNEUMATIC PRESSURE TEST

A. UNDER NO CIRCUMSTANCES SHALL PNEUMATIC TESTING BE PERFORMED ON NON-METALLIC PIPE.

B. Install pressure gauge to measure system pressure.

C. Connect air supply to piping system.

D. Open inlet valve and allow pressure to increase slowly to 25 psig or 20 percent of scheduled test pressure, whichever is LESS.

E. Close inlet valve and monitor system pressure for the duration indicated in the test schedule. Check for any drop in pressure that would indicate leaks.

F. If leaks are detected, locate leaks and judge the safety of bringing the system to the full test pressure. If judged unsafe, relieve the pressure on the system, repair leaks, and retest system at low pressure before proceeding.

G. Increase pressure to the specified test pressure. Close inlet valve and monitor system pressure for duration specified in schedule. After the specified duration, check pressure reading on system gauge. No detectable drop in pressure shall have occurred in the system.

H. If a drop in pressure occurs, Contractor shall check all joints and other possible sources of leaks with soap solution. Once cause is determined release the pressure, repair pipe as necessary, and retest.

I. Upon compliance with test requirements, vent and allow system to return to atmospheric pressure. Remove items added or replace those removed for testing.

3.6 GRAVITY TEST

A. Perform test before fixtures are installed.

B. Test by filling system with free-standing (i.e., open to atmosphere) test fluid. Note level of fluid at free surface at beginning of test.

C. Test joints under a minimum standing head as scheduled (see Test Pressure in Schedule), except for upper sections of piping. Test upper sections of piping to overflowing.

D. Allow test fluid to stand in system for duration scheduled. There shall be no noticeable loss of fluid during the specified duration.

E. If leaks are detected or if drop in fluid level occurs during specified duration, drain the system, repair pipe as necessary, and retest.

F. Upon compliance with test requirements, drain system, remove items added or replace those removed for testing.

3.7 PIPE TEST SCHEDULE

A. Perform pressure tests, of type indicated, on piping system(s) indicated using scheduled test fluid and pressure, indicated on pipe schedule, provided separately.

END OF SECTION

SECTION 23 05 00

COMMON WORK RESULTS FOR HVAC

PART 1 - GENERAL

1.1 SUMMARY

A. This Section includes the following basic mechanical materials and methods to complement other Division 23 Sections.

1. Pipe joint materials.
2. Transition fittings.
3. Dielectric fittings.
4. Sleeves.
5. Mechanical sleeve seals.
6. Escutcheons.
7. Grout.
8. Fabricated metal equipment supports.
9. Installation requirements common to mechanical specification Sections.
10. Piping joint construction.
11. Cutting and patching.
12. Arc welding precautions

B. Pipe and Pipe fitting materials are specified in piping system sections.

1.2 REFERENCES

A. Comply with the latest revision of the following codes, standards and specifications, except where more stringent requirements have been specified herein:

1. Local Building Codes
2. State Building Codes
3. State Mechanical Code
4. State Plumbing Code
5. State Fire Protection Code
6. American Society of Mechanical Engineers (ASME)
7. American National Standards Institute (ANSI)
8. National Fire Protection Association (NFPA)
9. Underwriters Laboratories (UL)
10. American Society for Testing and Materials (ASTM)
11. American Welding Society (AWS)
12. Occupational Safety and Health Administration (OSHA)

B. Definitions:

1. Pipe, pipe fittings, and piping include tube, tube fittings, and tubing.
2. Finished Spaces: Spaces other than mechanical and electrical equipment rooms, furred spaces, pipe and duct shafts, unheated spaces immediately below the roof, spaces above ceilings, unexcavated spaces, crawl spaces, and tunnels.
3. Exposed Interior Installations: Exposed to view indoors. Examples include finished occupied spaces and mechanical equipment rooms.

4. Exposed Exterior Installations: Exposed to view outdoors, or subject to outdoor ambient temperatures and weather conditions. Examples include rooftop locations.
5. Concealed Interior Installations: Concealed from view and protected from physical contact by building occupants. Examples include above ceilings and in duct shafts.
6. Concealed Exterior Installations: Concealed from view and protected from weather conditions and physical contact by building occupants, but subject to outdoor ambient temperatures. Examples include installations within unheated shelters.
7. The following are industry abbreviations for plastic materials:
   a. ABS: Acrylonitrile-butadiene-styrene plastic.
   b. CPVC: Chlorinated polyvinyl chloride plastic.
   c. PE: Polyethylene plastic.
   d. PVC: Polyvinyl chloride plastic.
8. The following are industry abbreviations for rubber materials:
   a. EPDM: Ethylene-propylene-diene terpolymer rubber.
   b. NBR: Acrylonitrile-butadiene rubber.
   c.

1.3 COORDINATION REQUIREMENTS

A. Submit specially prepared Coordination Drawings for this Project, including floor plans and sections, drawn to scale. Include scaled equipment layouts and relationships between equipment and adjacent structural, mechanical, HVAC, and electrical elements. Show the following:
   1. Vertical and horizontal runs, offsets, and transitions.
   2. Clearances for access above and to the side.
   3. Show dimensions and details, including connections.
   4. Support locations, type of support, and weight on each support.
   5. Location of adjacent construction elements including light fixtures, HVAC and plumbing equipment, fire sprinklers and piping, signal and control devices, and other equipment.

B. Sequencing:
   1. Coordinate mechanical equipment installation with other building components.
   2. Arrange for chases, slots, and openings in building structure during progress of construction to allow for mechanical installations.
   3. Coordinate the installation of required supporting devices and set sleeves in poured-in-place concrete and other structural components as they are constructed.
   4. Sequence, coordinate, and integrate installations of mechanical materials and equipment for efficient flow of the Work. Coordinate installation of large equipment requiring positioning prior to closing in the building.
   5. Coordinate connection of electrical services.
   6. Coordinate connection of mechanical systems with exterior underground and overhead utilities and services. Comply with requirements of governing regulations, franchised service companies, and controlling agencies.
   7. Coordinate requirements for access panels and doors where mechanical items requiring access are concealed behind finished surfaces. Access panels and doors are specified in Division 8 Section “Access Doors.”

8. Coordinate installation of identifying devices after completing covering and painting where devices are applied to surfaces. Install identifying devices prior to installing acoustical ceilings and similar concealment.

1.4 SUBMITTALS

A. Submit the following in accordance with the General Provisions.

B. Product Data: "Catalog cuts" and spec sheets marked to specifically indicate the equipment and materials proposed for this project. Indicate selections with arrows, and cross out irrelevant data. Submit product data for following items:

1. Mechanical sleeve seals.
2. Transition fittings.
3. Dielectric fittings.
4. Escutcheons.

1.5 WARRANTY

A. Provide parts and labor warranty in accordance with the General Provisions.

PART 2 - PRODUCTS

2.1 PIPE JOINING MATERIALS

A. Refer to individual piping system specification Sections in Division 23 for special joining materials not listed below.

B. Solder Filler Metal: ASTM B32.

1. Alloy Sn95 or Alloy Sn94: Tin (approximately 95 percent) and silver (approximately 5 percent), having 0.10 percent lead content.
2. Alloy Sn50: Tin (50 percent) and lead (50 percent).
3. Alloy E: Tin (approximately 95 percent) and copper (approximately 5 percent), having 0.10 percent maximum lead content.
4. Alloy HA: Tin-antimony-silver-copper-zinc, having 0.10 percent maximum lead content.
5. Alloy HB: Tin-antimony-silver-copper-nickel, having 0.10 percent maximum lead content.
6. Alloy Sb5: Tin (95 percent) and antimony (5 percent), having 0.20 percent maximum lead content.

C. Brazing Filler Metals: AWS A5.8.

1. BcuP Series: Copper-phosphorus alloys.
2. Bag1: Silver alloy.

D. Welding Filler Metals: Comply with AWS D10.12 for welding materials appropriate for wall thickness and chemical analysis of steel pipe being welded.

E. Solvent Cements: Manufacturer's standard solvents complying with the following:

1. Acrylonitrile-Butadiene-Styrene (ABS): ASTM D2235.
2. Chlorinated Poly (Vinyl Chloride) (CPVC): ASTM F493.

3. Poly (Vinyl Chloride) (PVC): ASTM D2564.
4. PVC to ABS Transition: Made to requirements of ASTM D3138, color other than orange.

2.2 TRANSITION FITTINGS

A. Plastic-to-Metal Transition Fittings: CPVC and PVC one-piece fitting with manufacturer's Schedule 80 equivalent dimensions; one end with threaded brass insert, and one solvent-cement-joint end.
   1. Manufacturers:
      a. Eslon Thermoplastics.
      b. Or equal

B. Plastic-to-Metal Transition Adaptors: One-piece fitting with manufacturer's SDR 11 equivalent dimensions; one end with threaded brass insert, and one solvent-cement-joint end.
   1. Manufacturers:
      a. Thompson Plastics, Inc.
      b. Or equal.

C. Plastic-to-Metal Transition Unions: MSS SP-107, CPVC and PVC four-part union. Include brass end, solvent-cement-joint end, rubber O-ring, and union nut.
   1. Manufacturers:
      a. NIBCO INC.
      b. Or equal.

D. Flexible Transition Couplings for Underground Nonpressure Drainage Piping: ASTM C1173 with elastomeric sleeve, ends same size as piping to be joined, and corrosion-resistant metal band on each end.
   1. Manufacturers:
      a. Cascade Waterworks Mfg. Co.
      b. Fernco, Inc.
      c. Mission Rubber Company.
      d. Plastic Oddities, Inc.
      e. Or equal.

2.3 DIELECTRIC FITTINGS

A. Manufacturers:
   1. Capitol Manufacturing Co.
   2. Central Plastics Company.
   3. Eclipse, Inc.
   4. Epco Sales, Inc.
   5. Hart Industries
   6. International, Inc.
   7. Watts Industries, Inc.
   8. Water Products Div.
   9. Zurn Industries, Inc.
   10. Wilkins Div.
   11. Or equal

B. Description: Combination fitting of copper alloy and ferrous materials with threaded, solder-joint, plain, or weld-neck end connections that match piping system materials.

C. Performance/Design Criteria:

1. Insulating Material: Suitable for system fluid, pressure, and temperature.
2. Dielectric Unions: Factory-fabricated, union assembly, for 250-psig (1725-kPa) minimum working pressure at 180 deg F (82 deg C).

D. Materials and Construction:

1. Dielectric Flanges: Factory-fabricated, companion-flange assembly, for 150- or 300-psig (1035- or 2070-kPa) minimum working pressure as required to suit system pressures.
   a. Manufacturers:
      1) Capitol Manufacturing Co.
      2) Central Plastics Company.
      3) Epco Sales, Inc.
      4) Watts Industries, Inc.; Water Products Div.
      5) Or equal.
2. Dielectric-Flange Kits: Companion-flange assembly for field assembly. Include flanges, full-face- or ring-type neoprene or phenolic gasket, phenolic or polyethylene bolt sleeves, phenolic washers, and steel backing washers.
   a. Manufacturers:
      1) Advance Products & Systems, Inc.
      2) Calpico, Inc.
      3) Central Plastics Company.
      4) Pipeline Seal and Insulator, Inc.
      5) Or equal.
   b. Separate companion flanges and steel bolts and nuts shall have 150- or 300-psig minimum working pressure where required to suit system pressures.
3. Dielectric Couplings: Galvanized-steel coupling with inert and noncorrosive, thermoplastic lining; threaded ends; and 300-psig minimum working pressure at 225 deg F.
   a. Manufacturers:
      1) Calpico, Inc.
      2) Lochinvar Corp.
      3) Or equal.

4. Dielectric Nipples: Electroplated steel nipple with inert and noncorrosive, thermoplastic lining; plain, threaded, or grooved ends; and 300-psig minimum working pressure at 225 deg F.
   a. Manufacturers:
      1) Perfection Corp.
      2) Precision Plumbing Products, Inc.
      3) Sioux Chief Manufacturing Co., Inc.
      4) Victaulic Co. of America.
      5) Or equal.

2.4 SLEEVES

A. Materials and Construction:

1. Galvanized-Steel Sheet: 0.0239-inch minimum thickness; round tube closed with welded longitudinal joint.
2. Steel Pipe: ASTM A53, Type E, Grade B, Schedule 40, galvanized, plain ends.
3. Cast Iron: Cast or fabricated “wall pipe” equivalent to ductile-iron pressure pipe, with plain ends and integral waterstop, unless otherwise indicated.
4. Stack Sleeve Fittings: Manufactured, cast-iron sleeve with integral clamping flange. Include clamping ring and bolts and nuts for membrane flashing.
   a. Underdeck Clamp: Clamping ring with set screws.
5. Molded PVC: Permanent, with nailing flange for attaching to wooden forms.
6. PVC Pipe: ASTM D1785, Schedule 40.
7. Molded PE: Reusable, PE, tapered-cup shaped, and smooth-outer surface with nailing flange for attaching to wooden forms.

2.5 MECHANICAL SLEEVE SEALS

A. Manufacturers:

1. Advance Products & Systems, Inc.
2. Calpico, Inc.
3. Metraflex Co.
4. Or equal

B. Description: Modular sealing element unit, designed for field assembly, to fill annular space between pipe and sleeve.

C. Performance/Design Criteria: <insert requirements>

D. Materials and Construction:

1. Sealing Elements: EPDM or NBR interlocking links shaped to fit surface of pipe. Include type and number required for pipe material and size of pipe.
2. Pressure Plates: Stainless steel. Include two for each sealing element.
3. Connecting Bolts and Nuts: Stainless steel of length required to secure pressure plates to sealing elements. Include one for each sealing element.

2.6 ESCUTCHEONS

A. Manufacturers: <insert requirements>

B. Description: Manufactured wall and ceiling escutcheons and floor plates, with an ID to closely fit around pipe, tube, and insulation of insulated piping and an OD that completely covers opening.

C. Materials and Construction:

1. One-Piece, Deep-Pattern Type: Deep-drawn, box-shaped brass with polished chrome-plated finish.
2. One-Piece, Cast-Brass Type: With set screw.
   a. Finish: [Polished chrome-plated] [Rough brass] [Polished chrome-plated and rough brass].

3. Split-Casting, Cast-Brass Type: With concealed hinge and set screw.
   a. Finish: [Polished chrome-plated] [Rough brass] [Polished chrome-plated and rough brass].
4. One-Piece, Stamped-Steel Type: With [set screw] [spring clips] [set screw or spring clips] and chrome-plated finish.
5. Split-Plate, Stamped-Steel Type: With [concealed] [exposed-rivet] hinge, [set screw] [spring clips] [set screw or spring clips], and chrome-plated finish.
6. One-Piece, Floor-Plate Type: Cast-iron floor plate.
7. Split-Casting, Floor-Plate Type: Cast brass with concealed hinge and set screw.

2.7 GROUT

A. Description: ASTM C1107, Grade B, nonshrink and nonmetallic, dry hydraulic-cement grout.

B. Materials and Construction:
   1. Characteristics: Post-hardening, volume-adjusting, nonstaining, noncorrosive, nongaseous, and recommended for interior and exterior applications.
   2. Design Mix: 5000-psi, 28-day compressive strength.
   3. Packaging: Premixed and factory packaged.

2.8 SHOP FINISHES

A. Finish: ANSI 61 light gray paint.

B. With the exception of those parts and components customarily furnished unpainted, prepare and coat all metal surfaces with rust inhibitive shop paint. Shop paint shall be fully compatible with the field paint specified.

C. Protect machined surfaces against damage and corrosion by other means.

PART 3 - EXECUTION

3.1 EXAMINATION

A. Examine areas and conditions for compliance with manufacturer's installation recommendations and requirements.

B. Examine walls, floors, roofs, and concrete bases for suitable conditions for installation, for example, all overhead work of other trades is complete.

C. Verify that ground connections are in place and that installation of grounding described in Section "Grounding" is complete.

D. Proceed with installation only after unsatisfactory conditions have been corrected.

3.2 INSTALLATION

A. Install materials as shown on the Contract Drawings and in accordance with the manufacturer's installation instructions.

B. Mechanical Installations

1. General: Sequence, coordinate, and integrate the various elements of mechanical systems, materials, and equipment. Comply with the following requirements:
   a. Coordinate mechanical systems, equipment, and materials installation with other building components.
   b. Verify all dimensions by field measurements.
   c. Arrange for chases, slots, and openings in other building components during progress of construction, to allow for mechanical installations.
   d. Coordinate the installation of required supporting devices and sleeves to be set in poured-in-place concrete and other structural components, as they are constructed.
   e. Sequence, coordinate, and integrate installations of mechanical materials and equipment for efficient flow of the Work. Give particular attention to large equipment requiring positioning prior to closing in the building.
   f. Where mounting heights are not detailed or dimensioned, install systems, materials, and equipment to provide the maximum headroom possible.
   g. Coordinate connection of mechanical systems with exterior underground and overhead utilities and services. Comply with requirements of governing regulations, franchised service companies, and controlling agencies. Provide required connection for each service.
   h. Install systems, materials, and equipment to conform with approved submittal data, including coordination drawings, to greatest extent possible. Conform to arrangements indicated by the Contract Documents, recognizing that portions of the Work are shown only in diagrammatic form. Where coordination requirements conflict with individual system requirements, refer conflict to the Owner's Representative.
   i. Install systems, materials, and equipment level and plumb, parallel and perpendicular to other building systems and components, where installed exposed in finished spaces.
   j. Install mechanical equipment to facilitate servicing, maintenance, and repair or replacement of equipment components. As much as practical, connect equipment for ease of disconnecting, with minimum of interference with other installations. Extend grease fittings to an accessible location.
   k. Install access panel or doors where units are concealed behind finished surfaces.
   l. Install systems, materials, and equipment giving right-of-way priority to systems required to be installed at a specified slope.

C. Piping Installation

1. General: Install piping as described below, except where system Sections specify otherwise. Individual piping system specification Sections in Division 23 specify piping installation requirements unique to the piping system.
2. General Locations and Arrangements: Drawings (plans, schematics, and diagrams) indicate general location and arrangement of piping systems. Indicated locations and arrangements were used to size pipe and calculate friction loss, expansion, pump sizing, and other design considerations. Install piping as indicated, except where deviations to layout are approved on coordination drawings.
3. Install piping at indicated slope.

4. Install components having pressure rating equal to or greater than system operating pressure.
5. Install piping in concealed interior and exterior locations, except in equipment rooms and service areas.
6. Install piping free of sags and bends.
7. Install exposed interior and exterior piping at right angles or parallel to building walls. Diagonal runs are prohibited, except where indicated.
8. Install piping tight to slabs, beams, joists, columns, walls, and other building elements. Allow sufficient space above removable ceiling panels to allow for ceiling panel removal.
9. Install piping to allow application of insulation plus 3-inch clearance around insulation.
10. Locate groups of pipes parallel to each other, spaced to permit valve servicing.
11. Install fittings for changes in direction and branch connections.
12. Install couplings according to manufacturer's printed instructions.
13. Install pipe escutcheons for pipe penetrations of concrete and masonry walls, wall board partitions, and suspended ceilings in finished areas.
14. Verify final equipment locations for roughing in. Refer to equipment specifications in other Sections for roughing-in requirements.
15. Angle (wye) type strainers shall be provided with shutoff valve and cap on blowdown connection.
16. Where mains are reduced, provide eccentric reducing fittings installed with flat side on the bottom.
17. Horizontal piping shall not be installed less than 6 inches above finished floor (along walls), less than 7 ft-6 inches above finished floor (other areas), or in front of windows.
18. Piping shall be offset, relocated, or changed to clear ducts, beams, conduits and other obstacles.
19. Piping systems shall be free of noise and vibration under normal operating conditions.
20. Install piping to permit valve servicing.
21. Install escutcheons for penetrations of walls, ceilings, and floors according to the following:
    a. Piping with Fitting or Sleeve Protruding from Wall: One-piece, deep-pattern type.
    b. Chrome-Plated Piping: One-piece, cast-brass type with polished chrome-plated finish.
    c. Insulated Piping: One-piece, stamped-steel type with spring clips.
    d. Bare Piping at Wall and Floor Penetrations in Finished Spaces: One-piece, cast-brass type with polished chrome-plated finish.
    e. Bare Piping at Wall and Floor Penetrations in Finished Spaces: One-piece, stamped-steel type.
    f. Bare Piping at Ceiling Penetrations in Finished Spaces: One-piece, cast-brass type with polished chrome-plated finish.
    g. Bare Piping in Unfinished Service Spaces: Non escutcheon.
    h. Bare Piping in Equipment Rooms: No escutcheon.
    i. Bare Piping at Floor Penetrations in Equipment Rooms: No escutcheon.

D. Sleeves

1. Install sleeves for pipes passing through concrete and masonry walls, fire-rated partitions, concrete floor and roof slabs, and where indicated.
   a. Cut sleeves to length for mounting flush with both surfaces.
      1) Exception: Extend sleeves installed in floors of mechanical equipment areas or other wet areas 4 inches above finished floor level. Extend cast-iron sleeve fittings below floor slab as required to secure clamping ring where specified.
   b. Build sleeves into new walls and slabs as work progresses.
   c. Install large enough sleeves to provide 1/4-inch annular clear space between sleeve and pipe or pipe insulation. Use the following sleeve materials:
      1) Steel Pipe Sleeves: For pipes smaller than 6 inches.
      2) Steel Sheet-Metal Sleeves: For pipes 6 inches and larger that penetrate gypsum-board partitions.
      3) Cast Iron Sleeve Fittings: For floors having membrane waterproofing. Secure flashing between clamping flanges. Install section of cast-iron soil pipe to extend sleeve to 2 inches above finished floor level.
   d. Seal space outside of sleeve fittings with nonshrink, nonmetallic grout.
   e. Except for below-grade wall penetrations, seal annular space between sleeve and pipe or pipe insulation, using elastomeric joint sealants specified in Division 7 Section “Joint Sealants.”
   f. Above Grade, Exterior Wall, Pipe Penetrations: Seal penetrations using sleeves and mechanical sleeve seals. Size sleeve for 1-inch annular clear space between pipe and sleeve for installation of mechanical seals.
      1) Install steel pipe for sleeves smaller than 6 inches.
      2) Install cast-iron wall pipes for sleeves 6 inches and larger.
      3) Assemble and install mechanical seals according to manufacturer’s printed instructions.
   g. Below Grade, Exterior Wall, Pipe Penetrations: Install cast-iron wall pipes for sleeves. Seal pipe penetrations using mechanical sleeve seals. Size sleeve for 1-inch annular clear space between pipe and sleeve for installation of mechanical seals.
   h. Below Grade, Exterior Wall, Pipe Penetrations: Install ductile-iron wall penetration system sleeves according to manufacturer’s printed installation instructions.
   i. Fire Barrier Penetrations: Maintain indicated fire rating of walls, partitions, ceilings, and floors at pipe penetrations. Seal pipe penetrations with firestopping sealant material. Firestopping materials are specified in Division 7 Section Penetration Firestop.
2. Sleeves are not required for core-drilled holes.

E. Piping Joint Construction

1. Join pipe and fittings according to the following requirements and Division 23 Sections specifying piping systems.
2. Ream ends of pipes and tubes and remove burrs. Bevel plain ends of steel pipe.
3. Remove scale, slag, dirt, and debris from inside and outside of pipe and fittings before assembly.
4. Soldered Joints: Apply ASTM B813, water-flushable flux, unless otherwise indicated, to tube end. Construct joints according to ASTM B828 or CDA’s

"Copper Tube Handbook," using lead-free solder alloy complying with ASTM B32.

5. Brazed Joints: Construct joints according to AWS's "Brazing Handbook," "Pipe and Tube" Chapter, using copper-phosphorus brazing filler metal complying with AWS A5.8.
6. Threaded Joints: Thread pipe with tapered pipe threads according to ASME B1.20.1. Cut threads full and clean using sharp dies. Ream threaded pipe ends to remove burrs and restore full inside diameter. Join pipe fittings and valves as follows:
   a. Apply appropriate tape or thread compound to external pipe threads unless dry seal threading is specified.
   b. Damaged Threads: Do not use pipe or pipe fittings with threads that are corroded or damaged. Do not use pipe sections that have cracked or open welds.
7. Welded Joints: Construct joints according to AWS D10.12, using qualified processes and welding operators according to Part 1 "Quality Assurance" Article.
8. Flanged Joints: Select appropriate gasket material, size, type, and thickness for service application. Install gasket concentrically positioned. Use suitable lubricants on bolt threads.
9. Plastic Piping Solvent-Cement Joints: Clean and dry joining surfaces. Join pipe and fittings according to the following:
   a. Comply with ASTM F402 for safe-handling practice of cleaners, primers, and solvent cements.
   b. ABS Piping: Join according to ASTM D2235 and ASTM D2661 Appendices.
   c. CPVC Piping: Join according to ASTM D2846/D2846M Appendix.
   d. PVC Pressure Piping: Join schedule number ASTM D1785, PVC pipe and PVC socket fittings according to ASTM D2672. Join other-than-schedule-number PVC pipe and socket fittings according to ASTM D2855.
   e. PVC Nonpressure Piping: Join according to ASTM D2855.
   f. PVC to ABS Nonpressure Transition Fittings: Join according to ASTM D3138 Appendix
10. Plastic Pressure Piping Gasketed Joints: Join according to ASTM D3139.
11. Plastic Nonpressure Piping Gasketed Joints: Join according to ASTM D3212.
12. PE Piping Heat-Fusion Joints: Clean and dry joining surfaces by wiping with clean cloth or paper towels. Join according to ASTM D2657.
    a. Plain-End Pipe and Fittings: Use butt fusion.
    b. Plain-End Pipe and Socket Fittings: Use socket fusion.
13. Fiberglass Bonded Joints: Prepare pipe ends and fittings, apply adhesive, and join according to pipe manufacturer's written instructions.

F. Piping Connections

1. Piping Connections: Except as otherwise indicated, make piping connections as specified below.
   a. Install unions in piping 2 inches and smaller adjacent to each valve and at final connection to each piece of equipment having a threaded pipe connection.
   b. Install flanges in piping 2-1/2 inches and larger adjacent to flanged valves and at final connection to each piece of equipment having flanged pipe connection.

c. Dry Piping Systems (Gas, Compressed Air, and Vacuum): Install dielectric unions and flanges to connect piping materials of dissimilar metals.
d. Wet Piping Systems (Water and Steam): Install dielectric coupling and nipple fittings to connect piping materials of dissimilar metals.
1) [Where copper tube is joined to steel pipe, a section of brass pipe or a brass valve may be substituted for a dielectric fitting]. [A section of bronze pipe or a bronze valve is not acceptable].

G. Equipment Installation – Common Requirements
1. Install equipment to provide the maximum possible headroom where mounting heights are not indicated.
2. Install equipment according to submittal data. Portions of the Work are shown only in diagrammatic form. Refer conflicts to the Owner's Representative.
3. Install equipment level and plumb, parallel and perpendicular to other building systems and components in exposed interior spaces, except where otherwise indicated.
4. Install mechanical equipment to facilitate servicing, maintenance, and repair or replacement of equipment components. Connect equipment for ease of disconnecting, with minimum of interference with other installations. Extend grease fittings to an accessible location.
5. Install equipment giving right-of-way to piping systems installed at a required slope.

H. Painting and Finishing
1. Refer to The Section Painting for field painting requirements.
2. Damage and Touch Up: Repair marred and damaged factory-painted finishes with materials and procedures to match original factory finish.

I. Fabrication and Erection of Metal Equipment Supports and Anchorage
1. Cut, fit, and place miscellaneous metal supports accurately in location, alignment, and elevation to support and anchor mechanical equipment.
2. Field Welding: Comply with AWS D1.1 "Structural Welding Code – Steel."

J. Cutting and Patching
1. Cut, channel, chase, and drill floors, walls, partitions, ceilings, and other surfaces necessary for mechanical installations. Perform cutting by skilled mechanics of the trades involved.
2. Repair cut surfaces to match adjacent surfaces.

K. Grouting
1. Install nonmetallic nonshrink grout for mechanical equipment base bearing surfaces, pump and other equipment base plates, and anchors. Mix grout according to manufacturer's printed instructions.
2. Clean surfaces that will come into contact with grout.
3. Provide forms for placement of grout, as required.
a. Avoid air entrapment when placing grout.
b. Place grout to completely fill equipment bases.
4. Place grout on concrete bases to provide a smooth bearing surface for equipment.
5. Place grout around anchors.
6. Cure placed grout according to manufacturer's printed instructions.

L. Arc Welding Precautions

1. Load cell transducers will be installed at various locations in the facility during this contract period. Prior to any arc welding activities performed by either the Contractor or his subcontractor, precautions shall be taken to protect damage to load cell transducers, it shall be assumed that active load cells are in place, not dummy cells. As a minimum, the welder ground lead shall be attached directly to the vessel or structural member to be welded, preferably adjacent to the weld site. When this is not possible install high-current capacity cables across each load transducer to ground the vessel to the structural member. DO NOT rely on stray rods or piping for grounding, rods generally have high resistance terminations, while piping may contain non-conductive flexible piping couplings. Coordinate welding activities with the Owner.

3.3 FIELD QUALITY CONTROL

A. Perform tests in accordance with the following standards:

1. <Insert testing specifications and standards>.

B. Prepare for Acceptance Tests as follows:

1. Test insulation resistance for each feeder, and control circuit.
2. After installing equipment but before power supply is energized, verify that grounding system is completed.
3. Verify that equipment is installed and connected according to the Contract Documents.
4. Verify that electrical control wiring installation complies with manufacturer's submittal by means of point-to-point continuity testing.
5. Verify that field-installed power and control wiring complies with Division 26 requirements.
6. Verify that equipment is ready for pre-commissioning checks in accordance with manufacturer's written instructions.
7. <Insert additional requirements>.

3.4 PAINTING

A. Perform field painting in accordance with the Section “Painting.”

3.5 PROTECTION

A. Protect installed equipment from damage through Substantial Completion.

END OF SECTION

SECTION 23 05 29

HANGERS AND SUPPORTS FOR HVAC PIPING AND EQUIPMENT

PART 1 - GENERAL

1.1 SUMMARY

A. This Section includes hangers, supports, and restraints for HVAC systems including piping, ductwork, and equipment as shown on the Contract Drawings.

1.2 REFERENCES

A. Comply with the latest revision of the following codes, standards and specifications, except where more stringent requirements have been specified herein:

B. American Society of Mechanical Engineers (ASME):

1. ASME B31.1 – Power Piping Code
2. ASME B31.9 – Building Services Piping

C. Manufacturers Standardization Society (MSS):

1. MSS SP-58 Materials and Design of Pipe Supports
2. MSS SP-69 Selection and Application of Pipe Supports
3. MSS SP-89 Fabrication and Installation of Pipe Supports

D. American Society for Testing and Materials (ASTM):

1. ASTM A36 – Specification for Carbon Structural Steel
2. ASTM A167 – Specification for Stainless and Heat-Resisting Chromium-Nickel Steel Plate, Sheet, and Strip.
3. ASTM A480 – Specification for General Requirements for Flat-Rolled Stainless and Heat-Resisting Steel Plate, Sheet, and Strip.
4. ASTM A653 – Specification for Steel Sheet, Zinc-Coated (Galvanized) or Zinc-Iron Alloy-Coated (Galvannealed) by the Hot Dip Process.
5. ASTM A924 – Specification for General Requirements for Steel Sheet, Metallic-Coated by the Hot Dip Process.
6. ASTM B209 – Specification for Aluminum and Aluminum-Alloy Sheet and Plate.
7. ASTM C1107 – Specification for Packaged Dry, Hydraulic-Cement Grout (Nonshrink).

E. Sheet Metal and Air Conditioning Contractors' National Association, Inc. (SMACNA):

1. SMACNA "HVAC Duct Construction Standards."

1.3 SUBMITTALS

A. Submit the following in accordance with the General Provisions.

B. Product Data: "Catalog cuts" and spec sheets marked to specifically indicate the equipment and materials proposed for this project. Indicate selections with arrows, and cross out irrelevant data.

1.4 QUALITY ASSURANCE

A. Qualifications

1. Manufacturer's Factory Qualifications: Manufacturing facilities shall have accreditation to ISO 9000:2000 or an equivalent quality management system acceptable to the Engineer.

1.5 WARRANTY

A. Provide parts and labor warranty in accordance with the General Provisions.

PART 2 - PRODUCTS

2.1 GENERAL

A. All components of like size and type shall be the product of the same manufacturer for purposes of parts interchangeability.

2.2 CROSS MEMBERS

A. Structural steel shapes, ASTM A36.

2.3 UPPER HANGER ATTACHMENTS

A. Standard-Duty Beam Clamps (for piping): Malleable iron jaw, steel tie-rod, nuts, and washer. Underwriters Laboratories (UL) listed, Factory Mutual approved

B. Heavy-Duty Beam Clamps (for large pipe and equipment): Forged steel

C. Welded Structural Attachments: Carbon steel

D. Brace Fitting: Malleable iron bracket and pipe end, hex-head cap screw and nut

E. Wall Brackets: Factory-fabricated carbon steel bracket with knee brace

F. Concrete Inserts [for new upper deck construction only]:

1. Malleable iron inserts, threaded for rod.
2. Carbon steel inserts with lateral adjustment capability

G. Concrete Attachments [for existing concrete upper decks]: carbon steel plate with factory-drilled and anchor holes and factory-welded rod attachments

2.4 FASTENERS

A. Powder-Actuated Drive-Pin Fasteners: Powder-actuated-type, drive-pin attachments with pull-out and shear capacities appropriate for supported loads and building materials where used.

B. Mechanical-Anchor Fasteners: Insert-type attachments with pull-out and shear capacities appropriate for supported loads and building materials where used.

2.5 RODS

A. Rods: Carbon steel, ASTM A36, continuous thread or end thread.

2.6 PIPE SUPPORTS AND RESTRAINTS

A. Adjustable Swivel Ring: 3/4-inch through 8-inch pipe, malleable iron construction, black finish, Underwriters Laboratories (UL) listed, Factory Mutual (FM) approved, MSS SP-69, Anvil figure 104.

2.7 DUCTWORK HANGERS

A. Sheetmetal Straps:
1. Galvanized steel: ASTM A 527, lock-forming quality; and ASTM A525, coating designation G-90.
2. Aluminum: ASTM B209, alloy MLA with H-14 temper.
3. Stainless steel: ASTM A167, Type 302, 304, or 316; and ASTM A480, finish no. 1 or no. 4.

B. Fasteners:
1. Sheetmetal screws: same material as duct.
2. Bolts and nuts: steel or galvanized steel, hex-head.

C. Fabricate ductwork hangers in accordance with SMACNA "HVAC Duct Construction Standards."

PART 3 - EXECUTION

3.1 GENERAL

A. Hang, support, and restrain mechanical work from structural work. Do not hang, support, or restrain mechanical work from electrical work or from other mechanical work. Comply with MSS SP-69 and MSS SP-89. Install hangers, supports, clamps, and attachments as required to properly support piping from building structure.

B. Vertical Piping:
1. Support vertical risers of piping systems by means of heavy duty hangers installed close to base of pipe risers, and by riser clamps with extension arms at intermediate floors, with the distance between clamps not to exceed 25feet, unless otherwise specified. Support pipe risers in vertical shafts equivalent to the aforementioned. Install riser clamps above floor slabs, with the extension arms resting on floor slabs or pipe sleeves. Provide adequate clearances for risers that are subject to appreciable expansion and contraction caused by operating temperature ranges.
2. Support for extension arms of riser clamps which are secured to risers to be insulated for cold service shall be 4 inches above floor slabs, to allow room for insulation and vapor sealing around riser clamps.

C. Use clevis hangers for horizontal runs less than 20 feet long.

D. Pipe Slopes: Install hangers and supports to provide indicated pipe slopes and so maximum pipe deflections allowed by ASME B31.9, "Building Services Piping," is not exceeded.

3.2 HANGER SCHEDULE

A. Propane Gas Piping

1. 3/4 inch to 2 inch - Adjustable ring, wrought carbon steel, black.

3.3 PIPE HANGER SPACING

A. Space hangers or supports for horizontal piping on maximum center distances as listed in the following hanger schedules, except as otherwise specified, or noted on the Drawings.

B. Spacings do not apply where concentrated loads are placed between supports. Concentrated loads include flanges, valves, and specialties.

C. For steel pipe carrying fuel gas: Space hangers or supports on maximum centers of 6 feet for 1/2 inch pipe size; 8 feet for 3/4 inch and 1 inch pipe sizes; and 10 feet for 1-1/4 inch pipe size and above.

D. For ASTM 888, Type L copper pipe and copper tubing carrying liquid with specific gravity of 1.0 or less:

Pipe Size	Spacing
1/2 inch	5 feet
3/4 inch	5 feet
1 inch	6 feet
1-1/2 inch	8 feet
2 inch	8 feet
2-1/2 inch	9 feet
3 inch	10 feet
4 inch	12 feet

E. For Directional Changes: Install a hanger or support close to the point of change of direction of all pipe runs in either a horizontal or vertical plane.

F. For Concentrated Loads: Install additional hangers or supports, spaced as required and directed, at locations where concentrated loads such as in-line pumps, valves, fittings or accessories occur, to support the concentrated loads.

G. For Branch Piping Runs and Runouts over 5 feet in Length: Install a minimum of one hanger, and additional hangers if required by the hanger spacing schedules.

H. Parallel Piping Runs: Where several pipe lines run parallel in the same place and in close proximity to each other, trapeze hangers may be submitted for approval. Base hanger spacing for trapeze-type hangers on the smallest size of pipe being supported. Design the entire hanger assembly based on a safety factor of five, for the ultimate strength of the material being used.

3.4 ANCHORS, RESTRAINTS, RIGID SUPPORTS, STAYS AND SWAY BRACES

A. Install pipe anchors, restraints and sway braces, at locations noted on the Drawings. Design anchors so as to permit piping to expand and contract freely in opposite directions, away from anchor points. Install anchors independent of all hangers and supports, and in a manner which will not affect the structural integrity of the building.

B. In grooved-end piping systems, install restraints, anchors, and rigid supports as recommended by the manufacturer of the grooved end fittings to ensure proper support and alignment of the piping under operating and testing pressures (maximum hanger or support spacing shall be as previously specified).

1. Horizontal piping shall maintain a constant pitch without sags, humps, or lateral deflections.
2. Branch piping shall remain perpendicular to main piping and/or risers.
3. Vertical piping shall remain plumb without deflections.
4. Vertical piping shall be rigidly supported, or anchored at both top and bottom and wherever necessary to prevent movement and/or shearing forces at branch connections.

3.5 EQUIPMENT HANGERS

A. Provide vibration isolating hangers for equipment with motors.

B. Support air terminal units independent of ductwork.

C. Support slot diffusers independent of suspended ceiling grid.

3.6 RODS

A. Pipe and duct hanger rods shall be full size to match hangers.

B. Trapeze and equipment hanger rods shall be sized for maximum load with a safety factor of five.

C. Provide two nuts at each end of rods for positioning rod and hanger and locking each in place.

3.7 UPPER HANGER ATTACHMENTS

A. General

1. Upper hanger attachments shall be made to structural steel wherever possible.
2. Powder-driven drive pins shall not be used.
3. Expansion nails shall not be used.
4. Powder-driven fasteners shall not be used in precast concrete.
5. Loads in excess of 250 pounds shall not be supported from a single welded or powder-driven stud.

B. Steel Frame Construction

1. Provide intermediate structural steel members where required by ductwork support spacing. Select members based on a minimum safety factor of five.

2. Secure upper hanger attachments to steel bar joists within 6 inches of panel points, or provide intermediate strut to transfer load to top chord of joist.
3. Holes shall not be drilled in structural steel members.
4. Friction clamps shall not be used.

3.8 EXAMINATION

A. Examine areas and conditions for compliance with manufacturer's installation recommendations and requirements.

B. Examine walls, floors, roofs, and concrete bases for suitable conditions for installation, for example, all overhead work of other trades is complete.

C. Proceed with installation only after unsatisfactory conditions have been corrected.

3.9 PROTECTION

A. Protect installed equipment from damage through Substantial Completion.

END OF SECTION

SECTION 23 05 53

IDENTIFICATION FOR HVAC PIPING AND EQUIPMENT

PART 1 - GENERAL

1.1 SUMMARY

A. This Section includes Identification for HVAC Piping and Equipment as shown on the Contract Drawings.
   1. Pipe Identification Painting.
   2. Pipe Identification Markers and Tags.
   3. Valve Identification.
   4. Duct Identification.
   5. Equipment Identification.

1.2 REFERENCES

A. Comply with the latest revision of the following codes, standards and specifications, except where more stringent requirements have been specified herein:

B. American National Standards Institute (ANSI)
   1. ANSI A13.1 - Scheme for the Identification of Piping Systems.
   2. American Society for Testing and Materials (ASTM)

1.3 SUBMITTALS

A. Submit the following in accordance with the General Provisions.

B. Product Data: Catalog cuts and spec sheets marked to specifically indicate the equipment and materials proposed for this project. Indicate selections with arrows, and cross out irrelevant data.

1.4 QUALITY ASSURANCE

A. Identifying labels and markings for piping shall conform to ANSI A13.1 for legend, color, visibility, and size of legend and letters.

1.5 SEQUENCING AND SCHEDULING

A. Complete all testing, insulation, and finish painting prior to executing the Work of this Section.

PART 2 - PRODUCTS

2.1 MATERIALS

A. Description:
   1. Pipe Identification Markers:

a. Snap-On Type: Pre-coiled acrylic plastic marker with clear polyester coating, incorporating flow arrows, and legend printed in alternate directions.
   1) Piping or insulation under 6 inch O.D.: One piece wrap around type with 3/4 inch adhesive strip on inside edge and 360 degree visibility.
   2) Piping or insulation 6 inch O.D. and larger: Strip type with factory applied grommets, secure with stainless steel spring fasteners.
b. Stick-On Type: One piece pressure sensitive adhesive backed plastic marker with clear polyester coating, incorporating flow arrows and legend printed in alternate directions.
   1) Piping or insulation under 8 inch O.D.: Wrap around type with 360-degree visibility.
   2) Piping or insulation 8 inch O.D. and larger: Strip type.
c. Markers shall be color coded based on pipe contents. Color selection shall be according to chart in Part 3 of this Section.

B. Materials and Construction:

1. Pipe Banding Tape:
   a. 1-1/2 inch width (minimum), pressure sensitive adhesive backed type, of same material as pipe identification marker, and of color to match background color of pipe identification marker.
2. Pipe Service Identification Tags:
   a. Type: Brass, 19 B&S gage, with 1/4 inch high pipe service abbreviated lettering over 2-inch high pipe size lettering. Lettering shall be deep stamped and black filled. Tag to have 3/16 inch diameter hole at top for fastening.
   b. Size: 2 inch square tag.
   c. Fasteners: Brass “S” hook or brass jack chain, size as required for pipe to which tag is attached.
3. Valve Identification Tags:
   a. Type: Brass, 19 B&S gage, with 1/4 inch high valve service abbreviated lettering over 2-inch high lettering indicating valve service chart number. Lettering shall be deep stamped and black filled. Tag to have 3/16 inch diameter hole at top for fastening.
   b. Size:
      1) Utilities: 1-1/2 inch diameter round tag.
      2) Plumbing: 1-1/2 inch hexagon tag.
   c. Fasteners: Brass “S” hook or brass jack chain, size as required for valve stem or handle to which tag is attached.
4. Duct and Equipment Identification Letters & Numbers:
   a. Type: Stick-on type, made of all purpose polyester, single character letters and numbers, specifically designed for outdoor use.
   b. Color: Black letters on bright yellow background.
   c. Size: Letters and numbers shall be 1 inch or 3 inches in height, as specified.

2.2 MANUFACTURERS

A. The following manufacturers are named to establish a standard of quality necessary for the Project:

1. Seton Identification Company, Branford, Connecticut.
2. Brady Corporation, Milwaukee, Wisconsin.
3. Or equal

PART 3 - EXECUTION

3.1 PIPE IDENTIFICATION MARKERS AND TAGS

A. General:

1. Piping shall be identified as to content and direction of flow by use of pipe identification markers or tags.
2. Identify all piping, bare or insulated, whose contents match those listed in the Pipe Identification Schedule (Paragraph F, below), with the following exceptions:
   a. Piping in furred spaces or above plastered ceilings, except at access panels where valves and piping shall be identified as specified for exposed piping.
   b. Piping in finished spaces such as offices, toilet rooms, locker rooms, etc.
3. Marker legend size, field color, and length of field shall be in accordance with ANSI A13.1.
4. Legend wording shall be developed by the Contractor and submitted for review (see Section 1.3,B). Whenever possible, standard terminology should be used. Identification by the combination of two or more standard labels (at each identification point) is acceptable.

B. Use of Markers or Tags:

1. Pipe or insulation with an outside diameter (O.D.) of 3/4 inch and less shall be identified by the use of Pipe Service Identification Tags.
2. Pipe or insulation with an O.D. larger than 3/4 inch shall be identified by the use of Pipe Identification Markers.
3. Either snap-on or stick-on type markers may be used; except that stick-on markers shall not be used in the following situations:
   a. Areas where humid, wet, or dripping conditions are found or likely.
   b. Areas where chemical fumes are present or likely.
   c. Outdoor installations.
   d. On lines subject to 50 degree F temperature variations.

C. Location of Markers and Tags:

1. Pipe markers and tags shall be located so as to be readily visible from any reasonable point of observation.
2. Locate identification at all valves, branch or riser take-offs, and both sides of pipe passage through walls, floors, and ceilings.
3. On continuous pipe runs locate identification at 20 foot intervals, but not less than one marker or tag on any length of 10 feet or greater.

D. Preparation:

1. Insure that any painting is complete and the paint has thoroughly dried before applying identification.
2. Prepare surface in accordance with the manufacturer’s instructions for the type of identification used and the surface to which it is applied.

E. Installation:

1. Install markers and tags in accordance with the manufacturer's instructions.
2. Secure both ends of stick-on type markers with 360-degree application of pipe banding tape. Tape shall have one inch lap on pipe or insulation.

F. Pipe Identification Schedule: Identify the following types of piping with markers and/or tags.

Pipe Service	Label Abbreviation	Background Color	Letter Color
Propane Gas	Propane	Yellow	Black

3.2 VALVE IDENTIFICATION

A. General:

1. Valves specified below shall be designated by distinguishing numbers and/or letters.
2. Where applicable, valve designation shall match (as closely as possible) the designation found on the Contract Drawings.

B. Installation:

1. Fasten tags to valve stems or handles using brass "S" hooks or jack chain.
2. Fasten tags in a manner and location that will permit easy reading, but will not interfere with the operation of the valve.

C. Valve Service Identification Chart:

1. Provide two framed valve charts for each piping system to have valve identification tags.
2. Charts shall be typed, in the reviewed format (see 1.3D), on 8-1/2 x 11 inch heavy white bond paper and framed in an aluminum frame.
3. Hang framed charts at location(s) directed.

3.3 DUCT IDENTIFICATION

A. General:

1. Ductwork shall be identified as to type of air being conveyed and, where specified, the air handling unit to which it is connected by use of stick-on letters and numbers.
2. Identify bare or insulated interior ductwork (outdoor ductwork does not require labeling) in the following locations:
   a. Mechanical Equipment Rooms.
   b. Penthouses.

B. Location and Content of Identification:

1. Locate identification at ductwork connections to equipment and at ductwork roof penetrations.
2. Assemble letters to identify air within the duct as one of the following:
   a. "SUPPLY AIR"

b. "EXHAUST AIR"
c. "OUTSIDE AIR"

3. In addition, at roof penetrations, include the equipment identification number to which or from which the penetrating duct is connected. For example:
4. "EXHAUST AIR" or "SUPPLY AIR"
5. "TO EF-12A" "FROM ACU-301"
6. Horizontal ductwork shall have lettering on opposite sides, along centerline of the duct at each point of identification. Where view of vertical sides is obstructed, apply lettering to be visible from bottom and/or top of duct.
7. Vertical ductwork shall have lettering applied on the two most visible sides, oriented to read from the bottom upward, along the centerline of the duct.

C. Size of Lettering:

1. 12 inch or less duct or insulation dimension (or diameter) to which the lettering is applied: 1 inch high lettering.
2. Greater than 12 inch duct or insulation dimension (or diameter) to which the lettering is applied: 3 inch high lettering.

D. Installation:

1. Prepare surface to which lettering is applied and install lettering in accordance with the manufacturer's instructions.
2. Apply lettering in a straight line along the axis of the duct. Lettering edges should touch, but not overlap.

3.4 EQUIPMENT IDENTIFICATION

A. Location and Content of Identification:

1. Equipment shall be identified with a minimum of two sets of lettering. Center identification lettering, vertically and horizontally, on opposite vertical sides of the equipment.
2. Vertical sides selected shall have the longest dimension (i.e., label sides of equipment and not the ends), unless view is obstructed to those sides. If view is obstructed to sides of equipment, locate identification lettering on the two most visible vertical sides and/or ends.
3. Equipment identification numbers and letters shall match the designation found in the equipment schedules on the Contract Drawings.

B. Size of Lettering:

1. Use the largest lettering size (3 inch or 1 inch height) that will easily fit the available surface space.
2. Use only one lettering height on any given piece of equipment (i.e., do not mix lettering sizes).

C. Installation:

1. Prepare surface to which lettering is applied and install lettering in accordance with the manufacturer's instructions.
2. Apply lettering in a straight line along the axis of the equipment. Lettering edges should touch, but not over-lap.

3.5 PROTECTION

A. Protect installed equipment from damage through Substantial Completion.

END OF SECTION

SECTION 23 05 93

TESTING, ADJUSTING, AND BALANCING FOR HVAC

PART 1 - GENERAL

1.1 SUMMARY

A. This Section includes testing, adjusting, and balancing HVAC systems to produce design objectives, including the following:
   1. Adjusting total HVAC systems to provide indicated quantities.
   2. Measuring electrical performance of HVAC equipment.
   3. Verifying that automatic control devices are functioning properly.
   4. Reporting results of the activities and procedures specified in this Section.

1.2 REFERENCES

A. Comply with the latest revision of the following codes, standards and specifications, except where more stringent requirements have been specified herein:
   1. Associated Air Balance Council (AABC).
   2. Air Movement and Control Association (AMCA).
   3. National Environmental Balancing Bureau (NEBB).
   4. Sheet Metal and Air Conditioning Contractors' National Association (SMACNA).

1.3 PROJECT CONDITIONS

A. Full Owner Occupancy: The Owner will occupy the site and existing building during the entire testing, adjusting, and balancing period. Cooperate with the Owner during testing, adjusting, and balancing operations to minimize conflicts with the Owner's operations.

B. Partial Owner Occupancy: The Owner may occupy completed areas of the building before Substantial Completion. Cooperate with the Owner during testing, adjusting, and balancing operations to minimize conflicts with the Owner's operations.

1.4 SUBMITTALS

A. Submit the following in accordance with the General Provisions.

B. Quality-Assurance Submittals: Within 30 days from the Contractor's Notice to Proceed, submit 2 copies of evidence that the testing, adjusting, and balancing Agent and this Project's testing, adjusting, and balancing team members meet the qualifications specified in the "Quality Assurance" Article below.

C. Contract Documents Examination Report: Within 45 days from the Contractor's Notice to Proceed, submit 2 copies of the Contract Documents review report as specified in Part 3 of this Section.

D. Certified Testing, Adjusting, and Balancing Reports: Submit 2 copies of reports prepared, as specified in this Section, on approved forms certified by the testing, adjusting, and balancing Agent.

1.5 QUALITY ASSURANCE

A. Agent Qualifications: Engage a testing, adjusting, and balancing agent certified by either AABC or NEBB.

B. Testing, Adjusting, and Balancing Conference: Meet with the Owner's and the Architect's representatives on approval of the testing, adjusting, and balancing strategies and procedures plan to develop a mutual understanding of the details. Ensure the participation of testing, adjusting, and balancing team members, equipment manufacturers' authorized service representatives, HVAC controls Installer, and other support personnel. Provide 7 days' advance notice of scheduled meeting time and location.

1. Agenda Items: Include at least the following:
   a. Submittal distribution requirements.
   b. Contract Documents examination report.
   c. Testing, adjusting, and balancing plan.
   d. Work schedule and Project site access requirements.
   e. Coordination and cooperation of trades and subcontractors.
   f. Coordination of documentation and communication flow.

C. Certification of Testing, Adjusting, and Balancing Reports: Certify the testing, adjusting, and balancing field data reports. This certification includes the following:

1. Review field data reports to validate accuracy of data and to prepare certified testing, adjusting, and balancing reports.
2. Certify that the testing, adjusting, and balancing team complied with the approved testing, adjusting, and balancing plan and the procedures specified and referenced in this Specification.

D. Testing, Adjusting, and Balancing Reports: Use testing, adjusting, and balancing Agent's standard forms approved by the Engineer.

E. Instrumentation Calibration: Calibrate instruments at least every 6 months or more frequently if required by the instrument manufacturer.

1.6 WARRANTY

A. General Warranty: The national project performance guarantee specified in this Article shall not deprive the Owner of other rights the Owner may have under other provisions of the Contract Documents and shall be in addition to, and run concurrent with, other warranties made by the Contractor under requirements of the Contract Documents.

PART 2 - PRODUCTS

Not used.

PART 3 - EXECUTION

3.1 DEFINITIONS

A. Adjust: To regulate fluid flow rate and air patterns at the terminal equipment, such as to reduce fan speed or adjust a damper.

B. Balance: To proportion flows within the distribution system, including submains, branches, and terminals, according to design quantities.

C. Draft: A current of air, when referring to localized effect caused by one or more factors of high air velocity, low ambient temperature, or direction of airflow, whereby more heat is withdrawn from a person's skin than is normally dissipated.

D. Procedure: An approach to and execution of a sequence of work operations to yield repeatable results.

E. Report Forms: Test data sheets for recording test data in logical order.

F. Static Head: The pressure due to the weight of the fluid above the point of measurement. In a closed system, static head is equal on both sides of the pump.

G. Suction Head: The height of fluid surface above the centerline of the pump on the suction side.

H. System Effect: A phenomenon that can create undesired or unpredicted conditions that cause reduced capacities in all or part of a system.

I. System Effect Factors: Allowances used to calculate a reduction of the performance ratings of a fan when installed under conditions different from those presented when the fan was performance tested.

J. Terminal: A point where the controlled medium, such as fluid or energy, enters or leaves the distribution system.

K. Test: A procedure to determine quantitative performance of a system or equipment.

L. Testing, Adjusting, and Balancing Agent: The entity responsible for performing and reporting the testing, adjusting, and balancing procedures.

3.2 EXAMINATION

A. Examine Contract Documents to become familiar with project requirements and to discover conditions in systems' designs that may preclude proper testing, adjusting, and balancing of systems and equipment.
   1. Contract Documents are defined in the General and Supplementary Conditions of the Contract.
   2. Verify that balancing devices, such as test ports, gage cocks, thermometer wells, flow-control devices, balancing valves and fittings, and manual volume dampers, are required by the Contract Documents. Verify that quantities and locations of

these balancing devices are accessible and appropriate for effective balancing and for efficient system and equipment operation.

B. Examine approved submittal data of HVAC systems and equipment.

C. Examine project record documents described in Division 1 Section "Project Record Documents."

D. Examine Engineer's design data, including HVAC system descriptions, statements of design assumptions for environmental conditions and systems' output, and statements of philosophies and assumptions about HVAC system and equipment controls.

E. Examine equipment performance data, including fan and pump curves. Relate performance data to project conditions and requirements, including system effects that can create undesired or unpredicted conditions that cause reduced capacities in all or part of a system. Calculate system effect factors to reduce the performance ratings of HVAC equipment when installed under conditions different from those presented when the equipment was performance tested at the factory. To calculate system effects for air systems, use tables and charts found in AMCA 201, "Fans and Systems," Sections 7 through 10; or in SMACNA's "HVAC Systems--Duct Design," Sections 5 and 6. Compare this data with the design data and installed conditions.

F. Examine system and equipment installations to verify that they are complete and that testing, cleaning, adjusting, and commissioning specified in individual Specification Sections have been performed.

G. Examine system and equipment test reports.

H. Examine HVAC system and equipment installations to verify that indicated balancing devices, such as test ports, gage cocks, thermometer wells, flow-control devices, balancing valves and fittings, and manual volume dampers, are properly installed, and their locations are accessible and appropriate for effective balancing and for efficient system and equipment operation.

I. Examine systems for functional deficiencies that cannot be corrected by adjusting and balancing.

J. Examine strainers for clean screens and proper perforations.

K. Examine open-piping-system pumps to ensure absence of entrained air in the suction piping.

L. Examine equipment for installation and for properly operating safety interlocks and controls.

M. Examine automatic temperature system components to verify the following:

1. Dampers, valves, and other controlled devices operate by the intended controller.
2. Dampers and valves are in the position indicated by the controller.

3. Integrity of valves and dampers for free and full operation and for tightness of fully closed and fully open positions. This includes dampers in multizone units, mixing boxes, and variable-air-volume terminals.
4. Sensors are located to sense only the intended conditions.
5. Sequence of operation for control modes is according to the Contract Documents.
6. Controller set points are set at design values. Observe and record system reactions to changes in conditions. Record default set points if different from design values.
7. Interlocked systems are operating.

N. Report deficiencies discovered before and during performance of testing, adjusting, and balancing procedures.

O. Examine areas and conditions for compliance with manufacturer's installation recommendations and requirements.

P. Examine walls, floors, roofs, and concrete bases for suitable conditions for installation, for example, all overhead work of other trades is complete.

Q. Verify that ground connections are in place and that installation of grounding described in Section "Grounding" is complete.

R. Proceed with installation only after unsatisfactory conditions have been corrected.

3.3 PREPARATION

A. Prepare a testing, adjusting, and balancing plan that includes strategies and step-by-step procedures.

B. Complete system readiness checks and prepare system readiness reports. Verify the following:
1. Permanent electrical power wiring is complete.
2. Automatic temperature-control systems are operational.
3. Isolating and balancing valves are open and control valves are operational.

3.4 GENERAL TESTING AND BALANCING PROCEDURES

A. Perform testing and balancing procedures on each system according to the procedures contained in AABC national standards and this Section.

B. Perform testing and balancing procedures on each system according to the procedures contained in NEBB's "Procedural Standards for Testing, Adjusting, and Balancing of Environmental Systems" and this Section.

C. Cut insulation, ducts, pipes, and equipment cabinets for installation of test probes to the minimum extent necessary to allow adequate performance of procedures. After testing and balancing, close probe holes and patch insulation with new materials identical to those removed. Restore vapor barrier and finish according to the insulation Specifications for this Project.

D. Mark equipment settings with paint or other suitable, permanent identification material, including damper-control positions, valve indicators, fan-speed-control levers, and similar controls and devices, to show final settings.

3.5 CONSTANT-VOLUME AIR SYSTEMS – BALANCING PROCEDURES

A. The procedures in this Article apply to constant-volume supply-, return-, and exhaust-air systems. Additional procedures are required for process exhaust-air systems. These additional procedures are specified in other articles in this Section.

B. Adjust fans to deliver total design airflows within the maximum allowable rpm listed by the fan manufacturer.

1. Measure fan static pressures to determine actual static pressure as follows:
   a. Measure outlet static pressure as far downstream from the fan as practicable and upstream from restrictions in ducts such as elbows and transitions.
   b. Measure static pressure directly at the fan outlet or through the flexible connection.
   c. Measure inlet static pressure of single-inlet fans in the inlet duct as near the fan as possible, upstream from flexible connection and downstream from duct restrictions.
   d. Measure inlet static pressure of double-inlet fans through the wall of the plenum that houses the fan.
2. Measure static pressure across each air-handling unit component.
   a. Simulate dirty filter operation and record the point at which maintenance personnel must change filters.
3. Measure static pressures entering and leaving other devices such as sound traps, heat recovery equipment, and air washers under final balanced conditions.
4. Compare design data with installed conditions to determine variations in design static pressures versus actual static pressures. Compare actual system effect factors with calculated system effect factors to identify where variations occur. Recommend corrective action to align design and actual conditions.
5. Adjust fan speed higher or lower than design with the approval of the Architect. Make required adjustments to pulley sizes, motor sizes, and electrical connections to accommodate fan-speed changes.
6. Do not make fan-speed adjustments that result in motor overload. Consult equipment manufacturers about fan-speed safety factors. Modulate dampers and measure fan-motor amperage to ensure no overload will occur. Measure amperage in full cooling, full heating, and economizer modes to determine the maximum required brake horsepower.

C. Adjust volume dampers for main duct, submain ducts, and major branch ducts to design airflows within specified tolerances.

1. Measure static pressure at a point downstream from the balancing damper and adjust volume dampers until the proper static pressure is achieved.
   a. Where sufficient space in submains and branch ducts is unavailable for Pitot-tube traverse measurements, measure airflow at terminal outlets and inlets and calculate the total airflow for that zone.

2. Remeasure each submain and branch duct after all have been adjusted. Continue to adjust submains and branch ducts to design airflows within specified tolerances.

D. Measure terminal outlets and inlets without making adjustments.

1. Measure terminal outlets using a direct-reading hood or the outlet manufacturer's written instructions and calculating factors.

E. Adjust terminal outlets and inlets for each space to design airflows within specified tolerances of design values. Make adjustments using volume dampers rather than extractors and the dampers at the air terminals.

1. Adjust each outlet in the same room or space to within specified tolerances of design quantities without generating noise levels above the limitations prescribed by the Contract Documents.
2. Adjust patterns of adjustable outlets for proper distribution without drafts.

3.6 AIR HANDLING UNITS

A. Record drawing, design and field test static pressure, in order of physical arrangement, for each applicable system component; i.e., louver, filter, preheat coil, cooling coil, etc., and the most remote terminal unit. With controls functioning properly and proper water flow rates, test and record air dry bulb and wet bulb temperature of entering outside air, return air, mixed air, supply air, and air entering and leaving each coil for each air handling unit. Where feasible, measure air dry bulb and wet bulb temperatures with the mechanically aspirated psychrometer. All filters shall be clean and in place before starting fans. All air filters shall be artificially loaded, by partial blanking or other means, to produce air pressure drop midway between clean and dirty. Controls and dampers shall be set for normal full air flow testing and balancing.

3.7 MOTORS

A. Motors, 1/2 HP and Larger: Test at final balanced conditions and record the following data:

1. Manufacturer, model, and serial numbers.
2. Motor horsepower rating.
3. Motor rpm.
4. Efficiency rating if high-efficiency motor.
5. Nameplate and measured voltage, each phase.
6. Nameplate and measured amperage, each phase.
7. Starter thermal-protection-element rating.

B. Motors Driven by Variable-Frequency Controllers: Test for proper operation at speeds varying from minimum to maximum. Test the manual bypass for the controller to prove proper operation. Record observations, including controller manufacturer, model and serial numbers, and nameplate data.

3.8 TEMPERATURE TESTING

A. During testing, adjusting, and balancing, report need for adjustment in temperature regulation within the automatic temperature-control system.

B. Measure indoor wet- and dry-bulb temperatures every other hour for a period of 2 successive 8-hour days, in each separately controlled zone, to prove correctness of final temperature settings. Measure when the building or zone is occupied.

C. Measure outside-air, wet- and dry-bulb temperatures.

3.9 TEMPERATURE-CONTROL VERIFICATION

A. Verify that controllers are calibrated and commissioned.

B. Check transmitter and controller locations and note conditions that would adversely affect control functions.

C. Record controller settings and note variances between set points and actual measurements.

D. Verify operation of limiting controllers (i.e., high- and low-temperature controllers).

E. Verify free travel and proper operation of control devices such as damper and valve operators.

F. Verify sequence of operation of control devices. Note air pressures and device positions and correlate with airflow and water-flow measurements. Note the speed of response to input changes.

G. Confirm interaction of electrically operated switch transducers.

H. Confirm interaction of interlock and lockout systems.

I. Verify main control supply-air pressure and observe compressor and dryer operations.

J. Record voltages of power supply and controller output. Determine if the system operates on a grounded or nongrounded power supply.

K. Note operation of electric actuators using spring return for proper fail-safe operations.

3.10 TOLERANCES

A. Set HVAC system airflow and water flow rates within the following tolerances:
   1. Supply, Return, and Exhaust Fans: Plus 5 to plus 10 percent.
   2. Air Outlets and Inlets: 0 to minus 10 percent.

3.11 REPORTING

A. Initial Construction-Phase Report: Based on examination of the Contract Documents as specified in “Examination” Article above, prepare a report on the adequacy of design for systems’ balancing devices. Recommend changes and additions to systems’ balancing devices to facilitate proper performance measuring and balancing. Recommend changes and additions to HVAC systems and general construction to allow access for performance measuring and balancing devices.

B. Status Reports: As Work progresses, prepare reports to describe completed procedures, procedures in progress, and scheduled procedures. Include a list of deficiencies and problems found in systems being tested and balanced. Prepare a separate report for each system and each building floor for systems serving multiple floors.

3.12 FINAL REPORT

A. General: Typewritten, or computer printout in letter-quality font, on standard bond paper, in 3-ring binder, tabulated and divided into sections by tested and balanced systems.

B. Include a certification sheet in front of binder signed by the certified testing and balancing agent.

1. Include a list of the instruments used for procedures, along with proof of calibration.

C. Final Report Contents: In addition to the certified field report data, include the following:

1. Pump curves.
2. Fan curves.
3. Manufacturers' test data.
4. Field test reports prepared by system and equipment installers.
5. Other information relative to equipment performance, but do not include approved Shop Drawings and Product Data.

D. General Report Data: In addition to the form titles and entries, include the following data in the final report, as applicable:

1. Title page.
2. Name and address of testing, adjusting, and balancing Agent.
3. Project name.
4. Project location.
5. Engineer's name and address.
6. Contractor's name and address.
7. Report date.
8. Signature of testing, adjusting, and balancing Agent who certifies the report.
9. Summary of contents, including the following:
   a. Design versus final performance.
   b. Notable characteristics of systems.
   c. Description of system operation sequence if it varies from the Contract Documents.
10. Nomenclature sheets for each item of equipment.
11. Data for terminal units, including manufacturer, type size, and fittings.
12. Notes to explain why certain final data in the body of reports vary from design values.
13. Test conditions for fans and pump performance forms, including the following:
    a. Settings for outside-, return-, and exhaust-air dampers.
    b. Conditions of filters.
    c. Cooling coil, wet- and dry-bulb conditions.
    d. Face and bypass damper settings at coils.

e. Fan drive settings, including settings and percentage of maximum pitch diameter.
f. Inlet vane settings for variable-air-volume systems.
g. Settings for supply-air, static-pressure controller.
h. Other system operating conditions that affect performance.

E. System Diagrams: Include schematic layouts of air and hydronic distribution systems. Present with single-line diagrams and include the following:

1. Quantities of outside, supply, return, and exhaust airflows.
2. Duct, outlet, and inlet sizes.
3. Pipe and valve sizes and locations.
4. Terminal units.
5. Balancing stations.

F. Air-Handling Unit Test Reports: For air-handling units with coils, include the following:

1. Unit Data: Include the following:
   a. Unit identification.
   b. Location.
   c. Make and type.
   d. Model number and unit size.
   e. Manufacturer's serial number.
   f. Unit arrangement and class.
   g. Discharge arrangement.
   h. Sheave make, size in inches (mm), and bore.
   i. Sheave dimensions, center-to-center and amount of adjustments in inches (mm).
   j. Number of belts, make, and size.
   k. Number of filters, type, and size.
2. Motor Data: Include the following:
   a. Make and frame type and size.
   b. Horsepower and rpm.
   c. Volts, phase, and hertz.
   d. Full-load amperage and service factor.
   e. Sheave make, size in inches (mm), and bore.
   f. Sheave dimensions, center-to-center and amount of adjustments in inches (mm).
3. Test Data: Include design and actual values for the following:
   a. Total airflow rate in cfm (L/s).
   b. Total system static pressure in inches wg (Pa).
   c. Fan rpm.
   d. Discharge static pressure in inches wg (Pa).
   e. Filter static-pressure differential in inches wg (Pa).
   f. Heating coil static-pressure differential in inches wg (Pa).
   g. Outside airflow in cfm (L/s).
   h. Outside-air damper position.

G. Round, Flat-Oval, and Rectangular Duct Traverse Reports: Include a diagram with a grid representing the duct cross-section and record the following:

1. Report Data: Include the following:

a. System and air-handling unit number.
b. Location and zone.
c. Traverse air temperature in deg F (deg C).
d. Duct static pressure in inches wg (Pa).
e. Duct size in inches (mm).
f. Duct area in sq. ft. (sq. m).
g. Design airflow rate in cfm (L/s).
h. Design velocity in fpm (m/s).
i. Actual airflow rate in cfm (L/s).
j. Actual average velocity in fpm (m/s).
k. Barometric pressure in psig (Pa).

H. Instrument Calibration Reports: For instrument calibration, include the following:

1. Report Data: Include the following:
   a. Instrument type and make.
   b. Serial number.
   c. Application.
   d. Dates of use.
   e. Dates of calibration

END OF SECTION

SECTION 23 05 93.5

PIPE PRESSURE TESTS FOR HVAC

PART 1 - GENERAL

1.1 SUMMARY

A. This Section includes pipe pressure tests for building services piping systems as scheduled in Part 3 of this section.

1.2 REFERENCES

A. Comply with the latest revision of the following codes, standards and specifications, except where more stringent requirements have been specified herein:

1. American Society for Testing and Materials (ASTM)
2. American National Standards Institute (ANSI)

1.3 SUBMITTALS

A. Submit the following in accordance with the General Provisions.

B. In addition to those submittals identified in the General Provisions, the following items shall also be submitted:

C. Test Reports

1. A separate test report shall be submitted for each pressure test performed.
2. Information presented in test reports shall be typewritten, clear, concise, and accurate.
3. Reports shall be signed and dated by the supervisor in charge of performing the test and designated Inspector. Signatures shall certify that all information contained in the report is true and accurate to the best of the signatory's knowledge.
4. Reports shall contain, as a minimum, the following information:
   a. Type of test performed (e.g., hydrostatic, pneumatic, refrigerant, etc.)
   b. Description of system or portion of system to which testing was performed.
   c. Date of test.
   d. Time of pressure start.
   e. Time of pressure test completion.
   f. Test fluid used in test (e.g., tap water, dry air, refrigerant, etc).
   g. Pressure reading at beginning of test.
   h. Pressure reading at end of test.
   i. Location of pressure indicating devices.
   j. Precise location of leaks detected.
   k. Summary of leaks detected and suggested corrective action.
   l. Conclusions regarding overall fitness and condition of tested system.
   m. Signatures as described above.
   n. Appendix: Calibration history of instruments used.

1.4 QUALITY ASSURANCE

A. Tester's Qualifications

1. Workers and their supervisors performing the Work of this section shall be personally experienced in testing of pipe systems and shall have been regularly employed by a company with three years minimum experience in testing of similar pipe systems.

B. Inspection

1. Tests shall be performed by the Contractor in the presence of designated Inspector(s). Witness and signoff is required.
2. Inspectors shall, at all times, have access to any place where work is in preparation or in progress and Contractor shall provide sufficient safe and proper facilities for such access and inspection.

C. Qualifications

1. Manufacturer's Factory Qualifications: Manufacturing facilities shall have accreditation to ISO 9000:2000 or an equivalent quality management system acceptable to the Engineer.
2. Testing Firm Qualifications: An independent firm, with experience and capability to conduct specified tests, and is a member company of NETA or is an NRTL as defined by OSHA in 19 CFR 1910.7.
3. Testing Firm's Field Supervisor Qualifications: person currently certified by NETA or NICET to supervise on-site testing specified in Part 3.

1.5 SCHEDULING AND SEQUENCING

A. Perform test operations on complete piping system or in sections as required and/or directed to progress Work in satisfactory manner and not delay the general construction of the project.

B. If testing is performed in sections, valve or cap-off sections of piping to be tested, utilizing valves to be installed in permanent piping systems or temporary valves or caps as required to perform tests.

C. Transmit written notification of proposed date and time of pressure tests to the Owner's Representative at least 5 days in advance of such tests.

D. Pressure tests shall be performed prior to the installation of piping insulation or coverings.

E. Pressure tests on underground piping shall be performed when piping has been partially backfilled with joints exposed.

F. Pressure tests shall be performed prior to initial operation of piping systems.

PART 2 - PRODUCTS

2.1 TEST MATERIALS

A. Test Fluid: Where scheduled, test media shall meet the following criteria.

1. Air: Filtered, oil-free, dry compressed air supplied at or above indicated test pressure.

2.2 TEST EQUIPMENT

A. Gauges: Calibrated, dial-type, suitable for use with specified test fluid. Upper limit of gauge pressure range shall be 1.33 times the specified test pressure. Gauge accuracy shall be 1 percent of the indicated reading or better.

B. Soap Solution: American Gas & Chemical, “Leak-Tec”; or equivalent.

C. Air Compressor: Unit rated to supply compressed air at or above required test pressure. Unit shall have necessary filters and driers to deliver clean, oil-free, dry compressed air. Unit shall have shut-off valve installed on discharge connection.

D. Pressure Relief Valve: Suitable for use with compressed air, set to relieve at 10 to 15 percent above designated test pressure.

PART 3 - EXECUTION

3.1 GENERAL

A. Tests shall be conducted at ambient temperature, unless otherwise specified.

B. Do not use permanent system pressure gauges for pressure testing; remove and plug or isolate such gauges from the system during pressure tests.

C. Instrumentation in, or attached to, the piping being tested shall be protected during testing by isolation or removal. Return instrumentation to pre-test condition after completion of pressure testing.

D. Piping connected to specialties or equipment with a lower pressure rating than the specified test pressure shall be disconnected from the equipment (after the isolation valve) and openings plugged during the pressure test. After the completion of pressure testing, the piping shall be reconnected to the equipment.

E. Expansion joints shall be provided with temporary restraint or blocked off during testing.

F. Pressurization of piping systems by liquids or gases shall be executed in a slow and prudent manner to maintain safety, avoid over-pressurization, and avoid excessive leakage.

G. If the piping fails the test requirements, the Contractor shall determine the cause of leakage, make necessary repairs, and retest the piping. This procedure shall be repeated until the piping complies with test requirements. A separate test report shall be submitted for each test to a piping system or section of piping.

H. No caulking or putty shall be used in the repair of leaks. Back welding of threaded joints shall not be permitted as a means of repairing leaks.

I. Test reports shall be filled out and readings recorded as testing proceeds.

J. Safety glasses and hard hats shall be worn by personnel involved in or witnessing tests conducted at pressure of 20 psig or greater.

3.2 EXAMINATION

A. Examine equipment and construction in the area of piping to be tested. Note equipment and existing construction that may be damaged by leakage of the test fluid.

B. Verify that piping system bracing, alignment harnesses, and thrust restraints are in place before pressure is applied. Concrete restraints shall have cured adequately to withstand test pressure.

C. Proceed with testing only after unsatisfactory conditions have been corrected.

3.3 PREPARATION

A. Protect equipment and construction which may be damaged by leakage of test fluid by covering with appropriate material or removing from area.

B. Verify that piping to be tested is clean and all outlets in the system are closed.

C. Open non-outlet valves in piping section to be tested. Check valves that can prevent system sections from being filled or pressurized shall have their discs, etc. removed for testing (restore check valves to their pre-test) condition after completion of pressure testing).

D. Evacuate test areas of personnel not involved in the pressure testing.

3.4 PNEUMATIC PRESSURE TEST

A. UNDER NO CIRCUMSTANCES SHALL PNEUMATIC TESTING BE PERFORMED ON NON-METALLIC PIPE.

B. Install pressure gauge to measure system pressure.

C. Connect air supply to piping system.

D. Open inlet valve and allow pressure to increase slowly to 25 psig or 20 percent of scheduled test pressure, whichever is LESS.

E. Close inlet valve and monitor system pressure for the duration indicated in the test schedule. Check for any drop in pressure that would indicate leaks.

F. If leaks are detected, locate leaks and judge the safety of bringing the system to the full test pressure. If judged unsafe, relieve the pressure on the system, repair leaks, and retest system at low pressure before proceeding.

G. Increase pressure to the specified test pressure. Close inlet valve and monitor system pressure for duration specified in schedule. After the specified duration, check pressure

reading on system gauge. No detectable drop in pressure shall have occurred in the system.

H. If a drop in pressure occurs, Contractor shall check all joints and other possible sources of leaks with soap solution. Once cause is determined release the pressure, repair pipe as necessary, and retest.

I. Upon compliance with test requirements, vent and allow system to return to atmospheric pressure. Remove items added or replace those removed for testing.

3.5 PIPE TEST SCHEDULE

A. Perform pressure tests, of type indicated, on piping system(s) indicated using scheduled test fluid and pressure.

B. Schedule

UTILITY	TEST METHOD	TEST MEDIUM	TEST PRESSURE	TEST DURATION	LEAKAGE
Propane	Pneumatic	Air	50 psig	2 Hours	0

END OF SECTION

SECTION 23 07 00

HVAC INSULATION

PART 1 - GENERAL

1.1 SUMMARY

A. This Section includes mechanical insulation as shown on the Contract Drawings.

1. Semi-rigid and flexible duct, plenum, and breeching insulation; insulating cements; factory- or field-applied jackets; accessories and attachments; and sealing compounds.
2. Blanket, board, and block insulation; insulating cements; factory- or field-applied jackets; accessories and attachments; and sealing compounds.
3. Preformed, rigid and flexible pipe insulation; insulating cements; factory- or field-applied jackets; accessories and attachments; and sealing compounds.

1.2 REFERENCES

A. Comply with the latest revision of the following codes, standards and specifications, except where more stringent requirements have been specified herein:

1. American Society for Testing and Materials (ASTM)
2. Military Specifications (MIL), as applicably noted.
3. Energy Conservation Construction Code.

1.3 COORDINATION REQUIREMENTS

A. Coordinate layout and installation of HVAC Insulation with electrical equipment, light fixtures, HVAC equipment and ductwork, and piping.

B. Coordinate clearance requirements with duct, equipment and piping Installer(s) for insulation applications.

C. Coordinate size and location of supports, hangers, and insulation shields specified in the Section “Hangers and Supports for HVAC Piping and Equipment.”

1.4 SUBMITTALS

A. Submit the following in accordance with the General Provisions.

B. Product Data: “Catalog cuts” and spec sheets marked to specifically indicate the equipment and materials proposed for this project. Indicate selections with arrows, and cross out irrelevant data.

C. Shop Drawings:

1. Show fabrication and installation details for the following:
   a. Duct
      1) Removable insulation sections at access panels.
      2) Application of field-applied jackets.
      3) Applications at linkages for control devices.
      4) Duct lining.

b. Equipment
   1) Field application for each equipment type.
   2) Removable insulation sections at access panels.
   3) [Application of field-applied jackets.]
   4) Special shapes for cellular-glass insulation.

D. Certificates:
   1. Installer Certificates: Signed by the Contractor certifying that installers comply with requirements.

E. Test and Evaluation Reports:
   1. Material Test Reports: From a qualified testing agency acceptable to authorities having jurisdiction indicating, interpreting, and certifying test results for compliance of insulation materials, sealers, attachments, cements, and jackets with requirements indicated. Include dates of tests.

1.5 QUALITY ASSURANCE

A. Qualifications
   1. Manufacturer's Factory Qualifications: Manufacturing facilities shall have accreditation to ISO 9000:2000 or an equivalent quality management system acceptable to the Engineer.
   2. Seismic Professional Engineer Qualifications: A professional engineer who is legally qualified to practice in jurisdiction where Project is located and who is experienced in providing seismic engineering services, including the design of seismic restraints, that are similar to those indicated for this Project.

B. Installer Qualifications: Skilled mechanics who have successfully completed an apprenticeship program or another craft training program certified by the U.S. Department of Labor, Bureau of Apprenticeship and Training.

C. Fire-Test-Response Characteristics: As determined by testing materials identical to those specified in this Section according to ASTM E 84, by a testing and inspecting agency acceptable to authorities having jurisdiction. Factory label insulation and jacket materials and sealer and cement material containers with appropriate markings of applicable testing and inspecting agency.
   1. Insulation Installed Indoors: Flame-spread rating of 25 or less, and smoke-developed rating of 50 or less.
   2. Insulation Installed Outdoors: Flame-spread rating of 75 or less, and smoke-developed rating of 150 or less.

1.6 WARRANTY

A. Provide parts and labor warranty in accordance with the General Provisions.

1.7 SCHEDULING

A. Schedule insulation application after testing duct systems and piping systems. Insulation application may begin on segments of piping and ducts that have satisfactory test results.

PART 2 - PRODUCTS

2.1 MANUFACTURERS

A. Available Manufacturers: Subject to compliance with requirements, manufacturers offering products that may be incorporated into the Work include, but are not limited to, the following:

B. Manufacturers: Subject to compliance with requirements, provide products by one of the following:

1. Mineral-Fiber Insulation:
   a. CertainTeed Manson.
   b. Knauf FiberGlass GmbH.
   c. Owens-Corning Fiberglas Corp.
   d. Johns Manville Corp.
2. Flexible Elastomeric Thermal Insulation:
   a. Armstrong World Industries, Inc.
   b. Rubatex Corp.
   c. Aerocel.
3. Closed-Cell Phenolic-Foam Insulation:
   a. Kooltherm Insulation Products, Ltd.
   b. Kingspan Corp.
4. Cellular-Glass Insulation:
   a. Pittsburgh-Corning Corp.

2.2 INSULATION MATERIALS

A. Duct / Equipment

1. Mineral-Fiber Board Thermal Insulation: Glass fibers bonded with a thermosetting resin. Comply with ASTM C 612, Type IB, without facing and with all-service jacket manufactured from kraft paper, reinforcing scrim, aluminum foil, and vinyl film. Jacket to have self-sealing lap as applicable for application.
   a. Duct liner, non-permeable, tightly bonded mat facing, cleanable, fire resistant.
2. Mineral-Fiber Blanket Thermal Insulation: Glass fibers bonded with a thermosetting resin. Comply with ASTM C 553, Type II, without facing and with all-service jacket manufactured from kraft paper, reinforcing scrim, aluminum foil, and vinyl film.
   a. Adhesive: As recommended by insulation material manufacturer.
   b. Ultraviolet-Protective Coating: As recommended by insulation manufacturer.
3. Flexible Elastomeric Thermal Insulation: Closed-cell, sponge- or expanded-rubber materials. Comply with ASTM C 534, Type II for sheet materials.
   a. Adhesive: As recommended by insulation material manufacturer.
   b. Ultraviolet-Protective Coating: As recommended by insulation manufacturer.
4. Closed-Cell Phenolic-Foam Insulation: Block insulation of rigid, expanded, closed-cell structure. Comply with ASTM C 1126, Type II, Grade 1.

B. Piping / Equipment

1. Mineral-Fiber Insulation: Glass fibers bonded with a thermosetting resin complying with the following:
   a. Preformed Pipe Insulation: Comply with ASTM C 547, Type 1, with factory-applied, all-purpose, vapor-retarder jacket with or without self-sealing lap as applicable for application.
   b. Blanket Insulation: Comply with ASTM C 553, Type II, without facing.
   c. Fire-Resistant Adhesive: Comply with MIL-A-3316C in the following classes and grades:
      1) Class 1, Grade A for bonding glass cloth and tape to unfaced glass-fiber insulation, for sealing edges of glass-fiber insulation, and for bonding lagging cloth to unfaced glass-fiber insulation.
      2) Class 2, Grade A for bonding glass-fiber insulation to metal surfaces.
   d. Vapor-Retarder Mastics: Fire- and water-resistant, vapor-retarder mastic for indoor applications. Comply with MIL-C-19565C, Type II.
   e. Mineral-Fiber Insulating Cements: Comply with ASTM C 195.
   f. Expanded or Exfoliated Vermiculite Insulating Cements: Comply with ASTM C 196.
   g. Mineral-Fiber, Hydraulic-Setting Insulating and Finishing Cement: Comply with ASTM C 449/C 449M.
2. Closed-Cell Phenolic-Foam Insulation: Block insulation of rigid, expanded, closed-cell structure. Comply with ASTM C 1126, Type II, Grade 1. Preformed pipe insulation of rigid, expanded, closed-cell structure. Comply with ASTM C 1126, Type III, Grade 1.
3. Cellular-Glass Insulation: Inorganic, foamed or cellulated glass, annealed, rigid, hermetically sealed cells, incombustible.
   a. Block Insulation: ASTM C 552, Type I.
   b. Special-Shaped Insulation: ASTM C 552, Type III.
   c. Board Insulation: ASTM C 552, Type IV.

2.3 FIELD-APPLIED JACKETS

A. Duct / Equipment

1. General: ASTM C 921, Type 1, unless otherwise indicated.
2. Foil and Paper Jacket: Laminated, glass-fiber-reinforced, flame-retardant kraft paper and aluminum foil.
3. PVC Jacket: High-impact, ultraviolet-resistant PVC; 20 mils thick; roll stock ready for shop or field cutting and forming.
   a. Adhesive: As recommended by insulation material manufacturer.
   b. PVC Jacket Color: White [or gray].
4. Aluminum Jacket: Deep corrugated sheets manufactured from aluminum alloy complying with ASTM B 209 (ASTM B 209M), and having an integrally bonded moisture barrier over entire surface in contact with insulation. Metal thickness [and corrugation] dimension[s] are scheduled below:
   a. Finish: Smooth finish
   b. Moisture Barrier: 1-mil-thick, heat-bonded polyethylene and kraft paper.
   c. Aluminum Thickness: 0.024 inch.
5. Stainless-Steel Jacket: Deep corrugated sheets of stainless steel complying with ASTM A666, Type 304 or 316; 0.10 inch thick; and roll stock ready for shop or field cutting and forming to indicated sizes.

a. Moisture Barrier: 1-mil- thick, heat-bonded polyethylene and kraft paper.
b. Moisture Barrier: 3-mil- thick, heat-bonded polyethylene and kraft paper.
c. Jacket Bands: Stainless steel, Type 304, 3/4-inch wide.

2.4 ACCESSORIES AND ATTACHMENTS

A. General

1. Glass Cloth and Tape: Comply with MIL-C-20079H, Type I for cloth and Type II for tape. Woven glass-fiber fabrics, plain weave, presized a minimum of 8 oz/yd2.
   a. Tape Width: 4 inches.
2. Bands: 3/4 inch wide, in one of the following materials compatible with jacket:
   a. Stainless Steel: ASTM A 666, Type 304; 0.020 inch thick.
   b. Galvanized Steel: 0.005 inch thick.
   c. Aluminum: 0.007 inch thick.
   d. Brass: 0.010 inch thick.
   e. Nickel-Copper Alloy: 0.005 inch thick.
3. Wire: 0.080-inch, nickel-copper alloy; 0.062-inch, soft-annealed, stainless steel; or 0.062-inch, soft-annealed, galvanized steel.

B. Duct / Equipment

1. Weld-Attached Anchor Pins and Washers: Copper-coated steel pin for capacitor-discharge welding and galvanized speed washer. Pin length sufficient for insulation thickness indicated.
   a. Welded Pin Holding Capacity: 100 lb for direct pull perpendicular to the attached surface.
2. Adhesive-Attached Anchor Pins and Speed Washers: Galvanized steel plate, pin, and washer manufactured for attachment to duct and plenum with adhesive. Pin length sufficient for insulation thickness indicated.
   a. Adhesive: Recommended by the anchor pin manufacturer as appropriate for surface temperatures of ducts, plenums, and breechings; and to achieve a holding capacity of 100 lb for direct pull perpendicular to the adhered surface.
3. Self-Adhesive Anchor Pins and Speed Washers: Galvanized steel plate, pin, and washer manufactured for attachment to duct and plenum with adhesive. Pin length sufficient for insulation thickness indicated.

2.5 VAPOR RETARDERS

A. Mastics: Materials recommended by insulation material manufacturer that are compatible with temperature range, insulation materials, jackets, and substrates.

PART 3 - EXECUTION

3.1 EXAMINATION

A. Examine substrates and conditions for compliance with requirements for installation and other conditions affecting performance of insulation application.

B. Proceed with installation only after unsatisfactory conditions have been corrected.

C. Examine areas and conditions for compliance with manufacturer's installation recommendations and requirements.

D. Examine walls, floors, roofs, and concrete bases for suitable conditions for installation, for example, all overhead work of other trades is complete.

E. Proceed with installation only after unsatisfactory conditions have been corrected.

3.2 PREPARATION

A. Surface Preparation: Clean and dry surfaces to receive insulation. Remove materials that will adversely affect insulation application.

3.3 GENERAL APPLICATION REQUIREMENTS

A. Apply insulation materials, accessories, and finishes according to the manufacturer's written instructions; with smooth, straight, and even surfaces; and free of voids throughout the length of equipment, ducts/fittings and piping, including fittings, valves and specialties.

B. Refer to schedules at the end of this Section for materials, forms, jackets, and thicknesses required for each duct, equipment and piping system.

C. Use accessories compatible with insulation materials and suitable for the service. Use accessories that do not corrode, soften, or otherwise attack insulation or jacket in either wet or dry state.

D. Apply multiple layers of insulation with longitudinal and end seams staggered.

E. Seal joints and seams with vapor-retarder mastic on insulation indicated to receive a vapor retarder.

F. Keep insulation materials dry during storage, application and finishing.

G. Apply duct, equipment and pipe insulation with tight longitudinal seams and end joints. Bond seams and joints with adhesive recommended by the insulation material manufacturer.

H. Apply insulation with the least number of joints practical.

I. Apply insulation over fittings and specialties, with continuous thermal and vapor-retarder integrity, unless otherwise indicated.

1. Apply insulation over fittings, valves, and specialties, with continuous thermal and vapor-retarder integrity, unless otherwise indicated. Refer to special instructions for applying insulation over fittings, valves, and specialties.

J. Hangers and Anchors: Where vapor retarder is indicated, seal penetrations in insulation at hangers, supports, anchors, and other projections with vapor-retarder mastic. Apply insulation continuously through hangers and around anchor attachments.

1. Apply insulation continuously through hangers and around anchor attachments.

2. For insulation application where vapor retarders are indicated, extend insulation on anchor legs at least 12 inches from point of attachment to pipe and taper insulation ends. Seal tapered ends with a compound recommended by the insulation material manufacturer to maintain vapor retarder.
3. Install insert materials and apply insulation to tightly join the insert. Seal insulation to insulation inserts with adhesive or sealing compound recommended by the insulation material manufacturer.
4. Cover inserts with jacket material matching adjacent pipe insulation. Install shields over jacket, arranged to protect the jacket from tear or puncture by the hanger, support, and shield.

K. Insulation Terminations: For insulation application where vapor retarders are indicated, seal ends with a compound recommended by the insulation material manufacturer to maintain vapor retarder.

L. Apply insulation with integral jackets as follows:
1. Pull jacket tight and smooth.
2. Joints and Seams: Cover with tape and vapor retarder as recommended by insulation material manufacturer to maintain vapor seal.
3. Vapor-Retarder Mastics: Where vapor retarders are indicated, apply mastic on seams and joints and at ends adjacent to duct flanges and fittings.
4. Circumferential Joints: Cover with 3-inch-wide strips, of same material as insulation jacket. Secure strips with adhesive and outward clinching staples along both edges of strip and spaced 4 inches o.c.
5. Longitudinal Seams: Overlap jacket seams at least 1-1/2 inches. Apply insulation with longitudinal seams at bottom of pipe. Clean and dry surface to receive self-sealing lap. Staple laps with outward clinching staples along edge at 4 inches o.c.
   a. Exception: Do not staple longitudinal laps on insulation having a vapor retarder.

M. Cut insulation according to manufacturer's written instructions to prevent compressing insulation to less than 75 percent of its nominal thickness.

N. Install vapor-retarder mastic on equipment, ducts and plenums scheduled to receive vapor retarders.
1. Ducts with Vapor Retarders: Overlap insulation facing at seams and seal with vapor-retarder mastic and pressure-sensitive tape having same facing as insulation. Repair punctures, tears, and penetrations with tape or mastic to maintain vapor-retarder seal.
2. Ducts without Vapor Retarders: Overlap insulation facing at seams and secure with outward clinching staples and pressure-sensitive tape having same facing as insulation.
3. Equipment with Vapor Retarders: Overlap insulation facing at seams and seal with vapor-retarder mastic and pressure-sensitive tape having same facing as insulation. Repair punctures, tears, and penetrations with tape or mastic to maintain vapor-retarder seal.

O. Interior Wall and Partition Penetrations: Apply insulation continuously through walls and partitions, except fire-rated walls and partitions.

P. Omit equipment insulation from the following:

1. Vibration-control devices.
2. Testing agency labels and stamps.
3. Nameplates and data plates.

3.4 MINERAL-FIBER INSULATION APPLICATION: DUCTWORK

A. Blanket Applications for Ducts and Plenums: Secure blanket insulation with adhesive and anchor pins and speed washers.

1. Apply adhesives according to manufacturer's recommended coverage rates per square foot, for 100 percent coverage of duct and plenum surfaces.
2. Apply adhesive to entire circumference of ducts and to all surfaces of fittings and transitions.
3. Install anchor pins and speed washers on sides and bottom of horizontal ducts and sides of vertical ducts as follows:
   a. On duct sides with dimensions 18 inches and smaller, along longitudinal centerline of duct. Space 3 inches maximum from insulation end joints, and 16 inches o.c.
   b. On duct sides with dimensions larger than 18 inches. Space 16 inches o.c. each way, and 3 inches maximum from insulation joints. Apply additional pins and clips to hold insulation tightly against surface at cross bracing.
   c. Anchor pins may be omitted from top surface of horizontal, rectangular ducts and plenums.
   d. Do not overcompress insulation during installation.
4. Impale insulation over anchors and attach speed washers.
5. Cut excess portion of pins extending beyond speed washers or bend parallel with insulation surface. Cover exposed pins and washers with tape matching insulation facing.
6. Create a facing lap for longitudinal seams and end joints with insulation by removing 2 inches from one edge and one end of insulation segment. Secure laps to adjacent insulation segment with 1/2-inch staples, 1 inch o.c., and cover with pressure-sensitive tape having same facing as insulation.
7. Overlap unfaced blankets a minimum of 2 inches on longitudinal seams and end joints. Secure with steel band at end joints and spaced a maximum of 18 inches o.c.
8. Apply insulation on rectangular duct elbows and transitions with a full insulation segment for each surface. Apply insulation on round and flat-oval duct elbows with individually mitered gores cut to fit the elbow.
9. Insulate duct stiffeners, hangers, and flanges that protrude beyond the insulation surface with 6-inch-wide strips of the same material used to insulate duct. Secure on alternating sides of stiffener, hanger, and flange with anchor pins spaced 6 inches o.c.
10. Apply vapor-retarder mastic to open joints, breaks, and punctures for insulation indicated to receive vapor retarder.

B. Board Applications for Ducts and Plenums: Secure board insulation with adhesive and anchor pins and speed washers.

1. Apply adhesives according to manufacturer's recommended coverage rates per square foot, for 100 percent coverage of duct and plenum surfaces.

2. Apply adhesive to entire circumference of ducts and to all surfaces of fittings and transitions.
3. Space anchor pins as follows:
   a. On duct sides with dimensions 18 inches and smaller, along longitudinal centerline of duct. Space 3 inches maximum from insulation end joints, and 16 inches o.c.
   b. On duct sides with dimensions larger than 18 inches. Space 16 inches o.c. each way, and 3 inches maximum from insulation joints. Apply additional pins and clips to hold insulation tightly against surface at cross bracing.
   c. Anchor pins may be omitted from top surface of horizontal, rectangular ducts and plenums.
   d. Do not overcompress insulation during installation.
4. Cut excess portion of pins extending beyond speed washers or bend parallel with insulation surface. Cover exposed pins and washers with tape matching insulation facing.
5. Create a facing lap for longitudinal seams and end joints with insulation by removing 2 inches from one edge and one end of insulation segment. Secure laps to adjacent insulation segment with 1/2-inch staples, 1 inch o.c., and cover with pressure-sensitive tape having same facing as insulation.
6. Apply insulation on rectangular duct elbows and transitions with a full insulation segment for each surface. Groove and score insulation to fit as closely as possible to outside and inside radius of elbows. Apply insulation on round and flat-oval duct elbows with individually mitered gores cut to fit the elbow.
7. Insulate duct stiffeners, hangers, and flanges that protrude beyond the insulation surface with 6-inch-wide strips of the same material used to insulate duct. Secure on alternating sides of stiffener, hanger, and flange with anchor pins spaced 6 inches o.c.
8. Apply vapor-retarder mastic to open joints, breaks, and punctures for insulation indicated to receive vapor retarder.

3.5 FIELD-APPLIED JACKET APPLICATION: DUCTWORK

A. Apply glass-cloth jacket, where indicated, directly over bare insulation or insulation with factory-applied jackets.
   1. Apply jacket smooth and tight to surface with 2-inch overlap at seams and joints.
   2. Embed glass cloth between two 0.062-inch-thick coats of jacket manufacturer's recommended adhesive.
   3. Completely encapsulate insulation with jacket, leaving no exposed raw insulation.

3.6 FINISHES: DUCTWORK – EXPOSED

A. Glass-Cloth Jacketed Insulation: Paint insulation finished with glass-cloth jacket as specified in Division 9 Section "Painting."

B. Flexible Elastomeric Thermal Insulation: After adhesive has fully cured, apply two coats of insulation manufacturer's recommended protective coating.

C. Color: Final color as selected by Architect. Vary first and second coats to allow visual inspection of the completed Work.

3.7 DUCT SYSTEM APPLICATIONS

A. Insulation materials and thicknesses are specified in Table 1 at the end of this Section.

B. Materials and thicknesses for systems listed below are specified in Table 1 at the end of this Section.

C. Insulate the following plenums and duct systems:
   1. Intake air plenums.

D. Items Not Insulated: Unless otherwise indicated, do not apply insulation to the following systems, materials, and equipment:
   1. Fibrous-glass ducts.
   2. Metal ducts with duct liner.
   3. Flexible connectors.
   4. Vibration-control devices.
   5. Testing agency labels and stamps.
   6. Nameplates and data plates.
   7. Access panels and doors in air-distribution systems.

TABLE 1 – DUCT INSULATION MATERIALS
[Notes indicated in ( ) are at end of Table 1]

SERVICE	INSULATION MATERIAL	THICKNESS	NOTES
Outdoor air ducts and plenums, connections, and mixing boxes	Rigid mineral fiber	2 inches	Provide neat fit at intake plenum Maintain vapor retarder.

3.8 FIELD QUALITY CONTROL

A. Prepare for Acceptance Tests as follows:
   1. Test insulation resistance for each feeder, and control circuit.
   2. After installing equipment but before power supply is energized, verify that grounding system is completed.
   3. Verify that equipment is installed and connected according to the Contract Documents.
   4. Verify that electrical control wiring installation complies with manufacturer's submittal by means of point-to-point continuity testing.
   5. Verify that field-installed power and control wiring complies with Division 16 requirements.
   6. Verify that equipment is ready for pre-commissioning checks in accordance with manufacturer's written instructions.

B. Testing Agency: Engage a qualified independent testing agency to perform specified testing.

C. Acceptance Tests: After installing equipment and after electrical circuitry has been energized, demonstrate product capability and compliance with requirements as follows:

1. Perform visual and mechanical inspection and electrical tests according to NETA ATS, Section 7, as it applies to all installed systems and devices. Certify compliance with the following test parameters:
   a. Switchgear: Perform tests and inspections stated in NETA ATS, Section 7.1.
   b. Circuit Breakers: Perform tests and inspections stated in NETA ATS, Section 7.6.
   c. Protective Relays: Perform tests and inspections stated in NETA ATS, Section 7.9.
   d. Instrument Transformers: Perform tests and inspections stated in NETA ATS, Section 7.10.
   e. Metering and Instrumentation: Perform tests and inspections stated in NETA ATS, Section 7.11.
   f. Ground-Fault Systems: Perform tests and inspections stated in NETA ATS, Section 7.14.
   g. Surge Arresters: Perform tests and inspections stated in NETA ATS, Section 7.19.
2. Correct malfunctioning units on-site, where possible, and retest to demonstrate compliance; otherwise, replace with new units and retest.

3.9 PROTECTION

A. Protect installed equipment from damage through Substantial Completion.

END OF SECTION

SECTION 23 09 13

INSTRUMENTATION AND CONTROL DEVICES FOR HVAC

PART 1 - GENERAL

1.1 SUMMARY

A. This Section includes:
   1. Control devices for HVAC equipment

B. Coordinate Work of this Section with Electrical Work.

1.2 REFERENCES

A. Comply with the latest revision of the following codes, standards and specifications, except where more stringent requirements have been specified herein:

B. Materials and installation shall be in accordance with the latest revisions of the following codes, standards and specifications, except where more stringent requirements have been specified herein:
   1. Air Movement and Control Association (AMCA)
   2. American National Standards Institute (ANSI)
   3. American Society for Testing and Materials (ASTM)
   4. American Society of Heating, Refrigeration, Air Conditioning Engineers (ASHRAE)
   5. American Society of Mechanical Engineers (ASME)
   6. National Electrical Code (NEC)
   7. National Electrical Manufacturers Association (NEMA)
   8. National Fire Protection Association (NFPA)
   9. Underwriters Laboratories (UL).

1.3 DEFINITIONS

1.4 COORDINATION REQUIREMENTS

A. Coordinate location of thermostats with plans and room details before installation.

B. Coordinate equipment from other divisions including “Intrusion Detection,” “Lighting Controls,” “Motor-Control Centers,” “Panelboards,” and “Fire Alarm” to achieve compatibility with equipment that interfaces with those systems.

1.5 SUBMITTALS

A. Submit the following in accordance with the General Provisions.

B. Product Data: “Catalog cuts” and spec sheets marked to specifically indicate the equipment and materials proposed for this project. Indicate selections with arrows, and cross out irrelevant data.

1. Include manufacturer's technical literature for each control device. Indicate dimensions, capacities, performance characteristics, electrical characteristics, finishes for materials, and installation and startup instructions for each type of product indicated.
   a. Each control device labeled with setting or adjustable range of control.

1.6 QUALITY ASSURANCE

A. All work described in this section shall be installed, wired, circuit tested and calibrated by factory certified technicians qualified for this work and in the direct employment of the temperature control system manufacturer.

B. Electrical Components, Devices, and Accessories: Listed and labeled as defined in NFPA 70, Article 100, by a testing agency acceptable to authorities having jurisdiction, and marked for intended use.

C. Comply with NFPA 90A, "Installation of Air Conditioning and Ventilation Systems."

1.7 WARRANTY AND MAINTENANCE

A. All components, system software, and parts furnished and installed by the contractor shall be guaranteed against defects in materials and workmanship for two years after substantial completion. Labor to repair, reprogram, or replace these components shall be furnished by the contractor at no charge during normal working hours during the warranty period. Materials furnished but not installed by the BMS contractor shall be covered to the extent of the product only. Installation labor shall be the responsibility of the trade contractor performing the installation. All corrective software modifications made during warranty periods shall be updated on all user documentation and on user and manufacturer archived software disks. The Contractor shall respond to the owner's request for warranty service within 24 hours standard working hours.

PART 2 - PRODUCTS

2.1 GENERAL

A. All components of like size and type shall be the product of the same manufacturer for purposes of parts interchangeability.

2.2 MANUFACTURERS

A. The following manufacturers are named to establish a standard of quality necessary for the Project:
   1. Honeywell
   2. Dayton
   3. Or Equal

2.3 ELECTRIC CONTROL DEVICES

A. Low-Voltage, On-Off Thermostats for Propane Unit Heaters: NEMA DC 3, 24-V, bimetal-operated, mercury-switch type, - Honeywell Model T822 or equal

B. Electric Damper Actuators: Direct-coupled type designed for minimum 100,000 full-stroke cycles at rated torque. Belimo or equal.

1. Dampers: Size for running torque calculated as follows:
   a. Parallel-Blade Damper with Edge Seals: 7 inch-lbs/sq ft of damper.
   b. Opposed-Blade Damper with Edge Seals: 5 inch-lbs/sq ft of damper.
   c. Parallel-Blade Damper without Edge Seals: 4 inch-lbs/sq ft damper.
   d. Opposed-Blade Damper without Edge Seals: 3 inch-lbs/sq ft of damper.
2. Coupling: V-bolt and V-shaped, toothed cradle.
3. Overload Protection: Electronic overload or digital rotation-sensing circuitry.
4. Fail-Safe Operation: Mechanical, spring-return mechanism. Provide external, manual gear release on non-spring-return actuators.
5. Power Requirements (Two-Position Spring Return): 24V ac.
6. Temperature Rating: 22 deg F to 122ºF.
7. Run Time: 200 seconds open, 40 seconds closed.

PART 3 - EXECUTION

3.1 EXAMINATION

A. Verify that conditioned power supply is available to control units and operator workstation.

B. Examine areas and conditions for compliance with manufacturer's installation recommendations and requirements.

C. Verify that ground connections are in place and that installation of grounding described in Section "Grounding" is complete.

D. Proceed with installation only after unsatisfactory conditions have been corrected.

3.2 INSTALLATION

A. Install equipment level and plumb.

B. Connect and configure equipment and software to achieve sequence of operation specified.

C. Verify location of thermostats with plans and room details before installation. Locate all 60 inches above the floor.

D. Install guards or tamper proof enclosures on thermostats.

E. Install automatic dampers according to manufacturer's written installation instructions.

F. Install labels and nameplates to identify control components according to the Section "Identification for HVAC Piping and Equipment."

G. Install electronic wire and cables according to the Section "Wire and Cables."

3.3 ELECTRICAL WIRING AND CONNECTION INSTALLATION

A. Install building wire and cable according to the Section “Wires and Cables.”

B. Install signal and communication cable according to the Section “Wires and Cables.”

1. Conceal cable, except in mechanical rooms and areas where other conduit and piping are exposed.
2. Install exposed cable in raceway.
3. Install concealed cable in raceway. Raceway is not required for plenum rated Class 2 or Class 3 circuits, or communications bus circuits installed above suspended ceilings.
4. Bundle and harness multiconductor instrument cable in place of single cables where several cables follow a common path.
5. Fasten flexible conductors, bridging cabinets and doors, along hinge side; protect against abrasion. Tie and support conductors.
6. Number-code or color-code conductors for future identification and service of control system, except local individual room control cables.

3.4 FIELD QUALITY CONTROL

A. Manufacturer’s Field Service: Engage a factory-authorized service representative to inspect field-assembled components and equipment installation, including piping and electrical connections. Report results in writing.

1. Operational Test: After electrical circuitry has been energized, start units to confirm proper unit operation. Remove malfunctioning units, replace with new units, and retest.
2. Test and adjust controls and safeties. Replace damaged and malfunctioning controls and equipment, and retest.

B. Replace damaged or malfunctioning controls and equipment.

1. Start, test, and adjust control systems.
2. Demonstrate compliance with requirements, including calibration and testing, and control sequences.
3. Adjust, calibrate, and fine tune circuits and equipment to achieve sequence of operation specified.

3.5 PROTECTION

A. Protect installed equipment from damage through Substantial Completion.

END OF SECTION

SECTION 23 11 23

PROPANE PIPING SYSTEM

PART 1 - GENERAL

1.1 SUMMARY

A. This Section includes a propane distribution system shown on the Contract Drawings.

1.2 REFERENCES

A. Materials and installation shall comply with the latest revision of the following codes, standards and specifications, except where more stringent requirements have been specified herein:

a.

2. American Society of Testing and Materials (ASTM):
   a. ASTM A53 – Specification for Pipe, Steel, Black and Hot-Dipped, Zinc-Coated, Welded and Seamless.
   b. ASTM A105 – Specification for Carbon Steel Forgings for Piping Applications.
   c. ASTM A193 – Specification for Carbon and Alloy Steel Bolting Materials for High-Temperature Service.
   d. ASTM A194 – Specification for Carbon and Alloy Steel Nuts for Bolts for High-Temperature Service.
3. American National Standards Institute/American Society of Mechanical Engineers (ANSI/ASME):
   a. ANSI/ASME B16.3 – Malleable Iron Threaded Fittings.
   b. ANSI/ASME B16.5 – Pipe Flanges and Flanged Fittings.
   c. ANSI/ASME B16.11 – Forged Steel Fittings, Socket-Welded and Threaded.
   d. ANSI/ASME B16.9 – Factory-Made Wrought Steel Buttwelding Fittings.
   e. ANSI/ASME B16.33 – Manually Operated Metallic Gas Valves for Use in Gas Piping Systems up to 125 psig.
   f. ANSI/ASME B16.38 – Large Metallic Valves for Gas Distribution (Manually Operated, NPS 2-1/2 to 12, 125 psig maximum).
4. American National Standards Institute / American Welding Society (ANSI/AWS):
   a. ANSI/AWS D10.12 – Recommended Practices and Procedures for Welding Low Carbon Steel.
5. American National Standards Institute/National Fire Protection Association (ANSI/ NFPA):
   a. ANSI/NFPA 54 – National Fuel Gas Code.
   b. ANSI/NFPA 70 – National Electrical Code.
6. The Fuel Gas Code of New York State.

1.3 COORDINATION REQUIREMENTS

A. Coordinate layout and installation of with electrical equipment, light fixtures, HVAC equipment and ductwork, and piping.

1.4 SUBMITTALS

A. Submit the following in accordance with the General Provision.

B. Product Data: "Catalog cuts" and spec sheets marked to specifically indicate the equipment and materials proposed for this project. Indicate selections with arrows, and cross out irrelevant data.

1.5 QUALITY ASSURANCE

A. Installer's Qualifications
1. Workers and their supervisors performing the Work of this section shall be personally experienced in installing Propane Piping Systems and shall have been regularly employed by a company specializing in Propane Piping Systems with five years minimum experience.
2. Installer shall, upon Owner's Representative's request, furnish the names and address of five similar projects that it has completed within the past 3 years.
3. Welders shall be certified and shall have a minimum of 3 years of welding experience.

B. Regulatory Requirements
1. Propane piping systems and appurtenances shall comply with the Fuel Gas Code of New York State.

C. Qualifications
1. Manufacturer's Factory Qualifications: Manufacturing facilities shall have accreditation to ISO 9000:2000 or an equivalent quality management system acceptable to the Engineer.

1.6 WARRANTY

A. Provide parts and labor warranty in accordance with the General Provision.

PART 2 - PRODUCTS

2.1 PROPANE PIPING SYSTEMS

A. Service
1. Media: Propane
2. Nominal system pressure: 11 to 13 in. wc.
3. Operating pressure range: 11 to 13 in. wc.

4. Heating value: approximately 2,488 Btu/ cu. ft.
5. Specific gravity: 1.5
6. Density: 0.115 lb/ft3

B. Pipe (above-grade)
1. 1/2 inch to 1-1/2 inch – Carbon steel, ASTM A53, type E, grade A, schedule 40.
2. 2 inch to 6 inch – Carbon steel, ASTM A53, type E, grade A, schedule 40.

C. Pipe (below-grade)
1. Polyethylene (PE), ASTM D 2513, SDR 11.

D. Fittings
1. 1/2 inch to 1-1/2 inch – Forged carbon steel, ASTM A105, 3000 lb., socket weld ends, ANSI/ASME B16.11.
2. 2 inch to 6 inch – Carbon steel, ASTM A234, butt-weld type, schedule 40, ANSI/ASME B16.9.
3. PE fittings: ASTM D 2683, socket-fusion type or ASTM D 3261, butt-fusion type with dimensions matching PE pipe.
4. PE transition fittings: Factory-fabricated fittings with PE pipe complying with ASTM D 2513, SDR 11.

E. Shutoff Valves
1. 1/2 inch to 1 inch - Ball valve, carbon steel body and ball, flanged ends, Teflon primary seats and seals, emergency stem seals, metal secondary seats, lockable carbon steel handle, 150 psig minimum rating at 100 degrees F, Underwriter's Laboratories (UL) Listed for natural gas service.
   a. Jamesbury Corp. Style AZ, Double-Seal, with Fire-Tite design.
   b. approved equal.
2. 1-1/4 inch to 2 inch - Ball valve, carbon steel body and ball, screwed ends, Teflon primary seats and seals, emergency stem seals, metal secondary seats, lockable carbon steel handle, 150 psig minimum rating at 100 degrees F, ANSI/ASME B16.33.
   a. Jamesbury Corp. Style AZ, Double-Seal, with Fire-Tite design.
   b. approved equal.
3. 2-1/2 inch to 6 inch – Lubricated plug valve, cast iron body, 316 stainless steel plug, flanged ends, lockable steel lever actuator, rated 125 psig WOG, ANSI/ASME B16.38.

F. Flanges
1. 1/2 inch to 1-1/2 inch – Carbon steel, ASTM A105, 150 lb., standard face, socket weld, ANSI/ASME B16.5.
2. 2 inch to 6 inch – Carbon steel, ASTM A105, slip-on or weld neck, 150 lb., standard face, ANSI/ASME B16.5.

G. Flange Gaskets – Material for gaskets shall be capable of withstanding the design temperature and pressure of the piping system, and the chemical constituents of the gas being conducted, without change to its chemical and physical properties. Acceptable materials include: metal, metal-jacketed asbestos (plain or corrugated), aluminum o-rings and spiral-wound metal gaskets

H. Flange Bolts – Alloy steel, ASTM A193, grade B7, cap screw, hex-head.

I. Flange Nuts – Alloy steel, ASTM A194, grade B7, hex-head.

J. Flange Insulation Kits

1. Flange insulation shall be supplied by a single manufacturer in the form of a kit. Kit shall contain a flange gasket, bolts, sleeves for all bolts, and insulating washers for the bolts.
2. Gaskets and washers shall be of a dielectric, phenolic material; bolt sleeves shall be of a dielectric, polyethylene material. Gaskets shall be of the same outside diameter as the flange.
3. Manufacturer: F.H. Maloney Co., Type E; Bolt-Pak Co.; or approved equal.

K. HDPE-to-Steel Transition Fitting: one-piece fitting providing transition from High Density Polyethelene (HDPE) to carbon steel. Fitting shall include HDPE section with fusion buttweld end, and carbon steel section with buttweld end. Transition shall be made with double O-ring seal, and shall be tamper proof and gas-tight. Fitting shall be rated for minimum 40 psig gas pressure. Fitting shall be as manufactured by Central Plastics Company, or approved equal.

L. Pressure gauges shall be industrial general service gauges, 4-1/2 inch dial, stainless steel construction, with isolation valve and pulsation dampener. Scale range shall be 0-10 psi. Accuracy shall be 1% of full scale. Ashcroft Type 1010 or approved equal. Provide pressure gauges where gas piping enter building.

PART 3 - EXECUTION

3.1 GENERAL

A. Propane piping systems shall be installed in accordance with the Fuel Gas Code of New York State and the Section “Common Work Results for HVAC Piping.”

B. Where piping runs are reduced in size, provide eccentric reducing fittings installed with flat side on the bottom.

C. Runouts shall be taken from the top of main, at 45 or 90 degrees.

D. Piping within buildings shall be supported in accordance with the Fuel Gas Code of New York State and the Section entitled “Hangers And Supports For HVAC Piping and Equipment.”

E. Propane piping systems shall be electrically continuous and bonded to a grounding electrode, as defined by the National Electrical Code, ANSI/NFPA 70. Flanged connections shall use flange insulation kits.

3.2 JOINT TYPE SELECTION

A. Pipe sizes 1/2 inch to 1-1/2 inch shall have socket welded type joints or threaded.

B. Pipe sizes 2 inch to 6 inch shall have butt welded type joints.

C. Welding shall be in accordance with ANSI/AWS D10.12.

D. Flange joints shall be used at valve and equipment connections.

3.3 INSPECTION

A. Propane piping systems shall be subject to inspection by the Owner's designated Inspector and by local permitting Authorities during and after installation.

B. Inspectors shall, at all times, have access to any place where work in preparation or progress. Contractor shall provide sufficiently safe and proper facilities for such access and inspection.

3.4 EXAMINATION

A. Examine areas and conditions for compliance with manufacturer's installation recommendations and requirements.

B. Examine walls, floors, roofs, and concrete bases for suitable conditions for installation, for example, all overhead work of other trades is complete.

C. Proceed with installation only after unsatisfactory conditions have been corrected.

3.5 INSTALLATION

A. Install piping and equipment as shown on the Contract Drawings and in accordance with the manufacturer's installation instructions.

3.6 PURGING

A. Propane piping systems shall be placed in operation in accordance with the Fuel Gas Code of New York State. If the system is filled with air, the air shall be purged with an inert gas prior to filling with propane.

3.7 IDENTIFICATION

A. Identify piping and valves as specified in Section "Identification for HVAC Piping and Equipment".

B. Emergency Operating Instructions: Frame and mount under clear acrylic plastic for wall mounting.

3.8 PROTECTION

A. Protect installed equipment from damage through Substantial Completion.

END OF SECTION

SECTION 23 31 00

HVAC DUCTS AND CASINGS

PART 1 - GENERAL

1.1 SUMMARY

A. This Section includes ductwork systems as shown on the Contract Drawings.

1.2 REFERENCES

A. Materials and installation shall be in accordance with the latest revisions of the following codes, standards and specifications, except where more stringent requirements have been specified herein:

1. American Society for Testing and Materials (ASTM)
2. Underwriters Laboratories (UL)
3. National Fire Protection Association (NFPA)
4. Sheet Metal and Air Conditioning Contractors National Association, Inc. (SMACNA).

1.3 COORDINATION REQUIREMENTS

A. Coordinate layout and installation of <insert room or area descriptions> with electrical equipment, light fixtures, HVAC equipment and ductwork, piping, and roof drains.

B. Submit specially prepared Coordination Drawings for this Project, including floor plans and sections, drawn to scale. Include scaled equipment layouts and relationships between equipment and adjacent structural, mechanical, HVAC, and electrical elements in the <insert room or area descriptions>. Show the following:

1. Vertical and horizontal runs, offsets, and transitions.
2. Clearances for access above and to the side.
3. Show dimensions and details, including connections.
4. Support locations, type of support, and weight on each support.
5. Location of adjacent construction elements including light fixtures, HVAC and plumbing equipment, fire sprinklers and piping, signal and control devices, and other equipment.

1.4 SUBMITTALS

A. Submit the following in accordance with the General Provisions.

B. In addition to those submittals identified in the General Provisions, the following shall be submitted:

1. Layout drawings of the equipment, ductwork, hangers, supports and accessories. Coordinate layout drawings with architectural, structural, electrical, plumbing, and mechanical work. Drawings shall list ductwork material, thickness (gauge), seam types, seam dimensions, and seal class for each size or size range of duct.
2. Method of attachment of duct hangers to building construction.

C. Product Data: "Catalog cuts" and spec sheets marked to specifically indicate the equipment and materials proposed for this project. Indicate selections with arrows, and cross out irrelevant data.

1.5 QUALITY ASSURANCE

A. Qualifications

1. Manufacturer's Factory Qualifications: Manufacturing facilities shall have accreditation to ISO 9000:2000 or an equivalent quality management system acceptable to the Engineer.

1.6 DELIVERY, STORAGE AND HANDLING

A. Deliver HVAC Ducts and Casings in shipping splits that can be moved past obstructions in the delivery path.

1.7 WARRANTY

A. Provide parts and labor warranty in accordance with the General Provisions.

PART 2 - PRODUCTS

2.1 MATERIALS

A. Ductwork

1. Galvanized Steel: ASTM A527 lock forming quality - galvanizing: ASTM A525 coating designation G-90.
2. Aluminum: ASTM B-209, Alloy 3003, Temper H-14.
3. Stainless Steel: ASTM A167, ASTM A480.

B. Duct Hangers

1. Strap Hangers: Same material as ducts.
2. Rod Type Hangers: Mild low carbon steel, unless otherwise specified; fully threaded or threaded each end, with 2 removable nuts each end for positioning and locking rod in place. Unless stainless steel, galvanized or cadmium plated; shop coat with metal primer.

C. Miscellaneous Fasteners and Upper Hanger Attachments

1. Sheet Metal Screws, Machine Bolts and Nuts: Same material as duct, unless otherwise specified.
2. Concrete Inserts: Steel or malleable iron, galvanized; continuously slotted or individual inserts.
3. Welding Studs: Erico Fastening Systems, capacitor discharge, low carbon steel, copper flashed.
4. Structural (carbon) Steel Shapes and Steel Plates: ASTM A36, shop primed.
5. Machine Bolt Expansion Anchors:
   a. Non-caulking single unit type: FS FF-S-325, Group II, Type 2, Class 2, Style 1.
   b. Non-caulking double unit type: FS FF-S-325, Group II, Type 2, Class 2, Style 2.

c. Self-drilling type: FS FF-S-325, Group III, Types 1 and 2.

2.2 RECTANGULAR DUCTWORK

A. Low Pressure Ductwork

1. Low pressure ductwork shall be defined as all duct with velocities less than 2500 FPM and static pressures of 0 to 2 inches (positive or negative). Low pressure ductwork shall conform to the 2-inch duct pressure class as classified by SMACNA. Low pressure ductwork shall include all transitions, plenums and, for variable air volume systems, the portion of supply ductwork between the VAV boxes and the diffusers.

B. Plenums

1. Fresh air plenums, exhaust plenums and mixed air plenums shall be constructed of 16-gauge galvanized steel for ducts 85 inches and larger, and 18-gauge galvanized steel for 84 inches and smaller. Fresh air intake plenums and exhaust plenums shall be made watertight at all bottom seams and up 12 inches on bottom seams by soldering. Where plenums connect to louvers, the bottom pans shall pitch down toward the louver. When bottom pan of plenum connects to drain outside, a 1-inch drain connection shall be fitted at the lowest point in the bottom pan.

C. Elbows

1. All square corner elbows and all short radius elbows where the center line radius is less than 1-1/2 times duct width shall be fitted with directional flow air-turning vanes on supply, return, intake and exhaust systems.

2.3 DUCT SEALANT

A. Low and medium pressure supply, exhaust and outdoor air duct systems shall be provided with Class A seals as defined in the SMACNA duct construction standards and as noted herein. All joints and connections shall be sealed with Duro-Dyne S-2 Hi-Pressure Sealer (an oil resistant polymer solution) or equal. Apply sealer to clean duct surface. For medium pressure classes 2 inches through 10 inches w.g., apply a 2-inch wide strip of polyvinyl-treated open weave fiberglass membrane over the wet sealer, then apply another coat of sealer over the membrane, as per manufacturer's recommendation. In addition, Contractor shall apply a coat of sealant to all male connectors of round ducts with medium pressure classification.

B. Low pressure return systems only need to meet Class C sealing requirements.

C. Ductmate' connections do not have to be sealed if installed per manufacturer's recommendations (see Part 3 – Execution).

PART 3 - EXECUTION

3.1 GENERAL

A. Duct sizes shown on drawings are in terms of width by depth. Duct sizes are inside clear dimensions.

B. Provide flexible connectors at connections to fans, air handling equipment, and fume hoods.

C. Exhaust duct branch connections shall be made at 45 degrees.

D. Provide blast gates on exhaust connections to equipment.

E. Maintain duct cross-sectional area at offsets.

F. Ductwork shall not be penetrated by obstructions such as pipe or conduit.

3.2 INSTALLATION

A. Install interior ductwork as high as possible and parallel to walls.

B. Ductwork shall not be installed in front of doors or windows. Ductwork shall not block access to equipment

C. Install products in accordance with the manufacturer's instructions.

D. Check locations of outlets and inlets and make necessary adjustments in position to conform with architectural features, symmetry, and light arrangement.

E. Install duct mounted diffusers and registers with air-tight connection.

F. Provide volume dampers on duct take-off to diffusers, registers, and grilles.

G. Paint ductwork visible behind air outlets and inlets with matte black.

3.3 CLEANING

A. Clean dust, dirt, debris, and scrap metal from inside ductwork prior to start-up.

3.4 INSTALLATION

A. Install HVAC Duct and Casings as shown on the Contract Drawings and in accordance with the manufacturer's installation instructions.

3.5 IDENTIFICATION

A. Identify HVAC Ducts and Casings as specified in Section "HVAC Piping and Equipment".

3.6 PROTECTION

A. Protect installed equipment from damage through Substantial Completion.

END OF SECTION

SECTION 23 33 00

DUCTWORK ACCESSORIES

PART 1 - GENERAL

1.1 SUMMARY

A. This Section includes Ductwork Accessories as shown on the Contract Drawings.

1.2 REFERENCES

A. Materials and installation shall be in accordance with the latest revisions of the following codes, standards and specifications, except where more stringent requirements have been specified herein:

1. American Society for Testing and Materials (ASTM)
2. Underwriters Laboratories (UL).
3. National Fire Protection Association (NFPA).
4. Sheet Metal and Air Conditioning Contractors National Association, Inc. (SMACNA).
5. American National Standards Institute (ANSI)

1.3 COORDINATION REQUIREMENTS

A. Coordinate layout and installation of Ductwork Accessories with electrical equipment, light fixtures, HVAC equipment and ductwork, and piping.

1.4 SUBMITTALS

A. In addition to those submittals identified in the General Provisions, the following shall be submitted:

1. Layout drawings of the equipment, duct work, hangers, supports and accessories. Coordinate layout drawings with architectural, structural, electrical, plumbing, and mechanical work. Drawings shall specify duct work material, pressure classifications, thickness (gauge), seam types, seam dimensions, and seal class for each size or size range of duct.
2. Details of intermediate structural steel members required to span main structural steel for the support of duct work.
3. Method of attachment of duct hangers to building construction.
4. Installation details for each type of fire damper used.

B. Submit the following in accordance with the General Provisions.

C. Product Data: “Catalog cuts” and spec sheets marked to specifically indicate the equipment and materials proposed for this project. Indicate selections with arrows, and cross out irrelevant data.

1.5 QUALITY ASSURANCE

A. Qualifications

1. Manufacturer's Factory Qualifications: Manufacturing facilities shall have accreditation to ISO 9000:2000 or an equivalent quality management system acceptable to the Engineer.

1.6 WARRANTY

A. Provide parts and labor warranty in accordance with the General Provisions.

PART 2 - PRODUCTS

2.1 VOLUME DAMPER

A. Rectangular volume dampers shall be galvanized steel, manual operator, locking quadrant, opposed action blades.

B. Round volume dampers shall be galvanized steel, manual operator, locking quadrant, single blade.

C. Manufacturers:
1. Ruskin
2. NCA Manufacturing
3. Equal

2.2 CONTROL DAMPERS

A. Insulated Galvanized Steel
1. Rectangular insulated blade control dampers shall be 16-gauge galvanized steel, air foil section, parallel action blades and suitable for use with an electric actuator. Damper shall be provided with head, sill, blade, and jamb seals. AMCA Standard 500 tested leakage rate of 48-inch x 48-inch damper shall be less than 3.7 cfm per sq ft at 1" w.g. Static pressure drop shall be less than 0.03-inch water-column at free area velocity of 1000 fpm. Ruskin IL35, Greenheck Model ICD or equal.
2. Electric actuator shall be provided by damper manufacturer. Actuator operating cycle and voltage shall be as scheduled.

B. Aluminum
1. Rectangular control dampers shall be aluminum air foil section, opposed action blades and suitable for use with an electric actuator. Damper shall be provided with head, sill, blade, and jamb seals. AMCA Standard 500 tested leakage rate of 48-inch x 48-inch damper shall be less than 5.6 cfm per sq ft at 4 inches w.g. Static pressure drop shall be less than 0.03-inch water-column at free area velocity of 1000 fpm. Ruskin CD50, NCA Manufacturing Model ACD-56, or equal.
2. Electric actuator shall be provided by damper manufacturer. Actuator operating cycle and voltage shall be as scheduled.

2.3 FLEXIBLE CONNECTORS

A. Flexible duct connector shall be fiberglass fabric coated with neoprene. Weight: 30 oz/sq yd. Thickness: 0.024 inches.

2.4 ACCESS DOORS

A. Access doors shall be galvanized steel with insulated, double wall construction.

B. Provide butt or piano type hinges and SMACNA Lock Type 1 sash locks.

C. Package spare parts in wooden boxes, labeled with the manufacturer's name, address and telephone number; local representative's name, address and telephone number; name of equipment the parts are for and list of parts contained therein.]

PART 3 - EXECUTION

3.1 GENERAL

A. Provide flexible connectors at connections to air handling equipment.

B. Provide access doors at inlet side of coils, intake plenums, and fire dampers.

3.2 EXAMINATION

A. Examine areas and conditions for compliance with manufacturer's installation recommendations and requirements.

B. Examine walls, floors, roofs, and concrete bases for suitable conditions for installation, for example, all overhead work of other trades is complete.

C. Proceed with installation only after unsatisfactory conditions have been corrected.

3.3 INSTALLATION

A. Install Ductwork Accessories as shown on the Contract Drawings and in accordance with the manufacturer's installation instructions.

3.4 PROTECTION

A. Protect installed equipment from damage through Substantial Completion.

END OF SECTION

SECTION 23 34 00

HVAC FANS

PART 1 - GENERAL

1.1 SUMMARY

A. This Section includes HVAC Fans and associated equipment as shown on the Contract Drawings.

1.2 REFERENCES

A. Comply with the latest revision of the following codes, standards and specifications, except where more stringent requirements have been specified herein:

1. Air Moving and Conditioning Association (AMCA).
2. Anti-Friction Bearing Manufacturers Association, Inc. (AFBMA).
3. American Society of Heating, Refrigerating and Air Conditioning Engineers, Inc. (ASHRAE).
4. Sheet Metal and Air Conditioning Contractors National Association, Inc. (SMACNA).
5. American National Standards Institute (ANSI).
6. American Society Of Testing Materials (ASTM).
7. Steel Structures Painting Council (SSPC).
8. National Electrical manufacturers Association (NEMA).

1.3 COORDINATION REQUIREMENTS

A. Coordinate layout and installation of HVAC Fans with electrical equipment, light fixtures, HVAC equipment and ductwork, piping, and roof drains.

B. Submit specially prepared Coordination Drawings for this Project, including floor plans and sections, drawn to scale. Include scaled equipment layouts and relationships between equipment and adjacent structural, mechanical, HVAC, and electrical elements in the <insert room or area descriptions>. Show the following:

1. Vertical and horizontal runs, offsets, and transitions.
2. Clearances for access above and to the side.
3. Show dimensions and details, including connections.
4. Support locations, type of support, and weight on each support.
5. Location of adjacent construction elements including light fixtures, HVAC and plumbing equipment, fire sprinklers and piping, signal and control devices, and other equipment.

1.4 SUBMITTALS

A. Submit the following in accordance with the General Provisions.

B. Product Data: “Catalog cuts” and spec sheets marked to specifically indicate the equipment and materials proposed for this project. Indicate selections with arrows, and cross out irrelevant data.

C. Shop Drawings:

1. Fan curves with operating point clearly marked. For two-speed fans, clearly mark both operating points and minimum and maximum recommended fan speeds.
2. Sound data.
3. Motor orientation.

1.5 QUALITY ASSURANCE

A. Qualifications

1. Manufacturer's Factory Qualifications: Manufacturing facilities shall have accreditation to ISO 9000:2000 or an equivalent quality management system acceptable to the Engineer.

B. Source Limitations: Obtain HVAC Fans and accessories through one source from a single manufacturer.

1.6 DELIVERY, STORAGE AND HANDLING

A. Coordinate delivery of HVAC Fans to allow movement into designated space.

B. Handle HVAC Fans components according to manufacturer's written instructions. Use factory-installed lifting provisions.

1.7 WARRANTY

A. Provide parts and labor warranty in accordance with the General Provisions.

PART 2 - PRODUCTS

2.1 GENERAL

A. Fans of the same type shall be of the same make and manufacturer. Fans shall be performance rated in accordance with AMCA Standard 210 and shall bear the AMCA seal in evidence thereof. Fans shall be Class I, II, or III as required by the airflow and pressure rating or as indicated on the drawings. Centrifugal fans shall be a minimum of Class II construction. Fans shall be dynamically balanced at the factory before shipment. Maximum allowable vibration shall be .25 inches/second.

1. combine with "G" below

B. Fan Belt Drives

1. Belt-driven fans with motors greater than 5 HP shall have a minimum of two belts.
2. Belts shall be V-belt type with a load factor of 1.4.
3. Belts and drives shall be matched.
4. Fan belts shall be enclosed in the fan assembly or provided with belt guard.

C. Sheaves

1. Motor drives shall have adjustable sheaves.

2. After final air balancing and dynamic balancing have been completed, adjustable sheaves shall be removed and fixed sheaves installed.
3. Adjustable sheaves shall be turned over to the Owner.

D. Bearings

1. Fan bearings, unless otherwise indicated, shall be self-aligning, grease lubricated anti-friction bearings with rated average life of 50,000 (AFBMA L-10) hours continuous operation at maximum speed and pressure for each AMCA fan class.

E. Finishes

1. Except where special finishes are required, all ferrous metals shall be prime coated over bonderizing

F. Capacities

1. Fan capacities and motor horsepower shall be as scheduled on the drawings.

2.2 SQUARE IN-LINE CENTRIFUGAL FAN

A. Manufacturers:

1. Barry Blower
2. Loren Cook
3. Twin City Fans
4. Or equal

B. Description: In-line centrifugal fans shall be the sizes and capacities as shown on the drawings. Fans shall be belt driven.

C. Materials and Construction:

1. Fan Housing
   a. Fan housing shall be of a square design, constructed of minimum 18 galvanized steel with inlet and discharge collars. Provide one access door and mounting feet.
2. Fan Wheels
   a. Fan wheels shall be backward inclined, centrifugal type of aluminum construction. Wheel and shaft shall be statically and dynamically balanced at the factory, in accordance with AMCA standard 204-96.
3. Shafts
   a. Fan shafts shall be ground and polished steel sized so that the first critical speed is at least 25% over the maximum operating speed. Pillow block bearings shall be factory-tested and designed for air handling applications with a minimum (L50) life in excess of 200,000 hours.
4. Motors
   a. Motors shall be premium efficiency type and shall be matched to the fan load hp as indicated. Provide a UL-listed disconnect switch, factory-mounted and -wired to the motor.

5. Drives
   a. Drives shall be sized for 150% of driven horse power. Machined cast iron pulleys shall be factory-set to the required RPM and shall be field adjustable for final system balancing.
6. Disconnect Switch
   a. Provide factory-mounted and -wired, NEMA 1 disconnect switch.
7. Inlet/Discharge Guard
   a. Provide 1/2-inch by 1/2-inch galvanized welded wire on a galvanized frame. Frame shall be removable for service and inspection.
8. Motor Cover/Belt Guard
   a. Provide galvanized steel constructed, combination motor cover and belt guard.
9. Motor Cover/Belt Guard
   a. Protective Coating
   b. All steel fan components shall be coated with an electrostatically applied, baked polyester powder coating.
10. Insulated Fan Housing
    a. Provide fan housing with internal acoustical lining.
11. Base-Mounted Vibration Isolators
    a. Provide base-mounted vibration isolators when fan is free standing. Vibration isolators shall be [neoprene base isolators] [spring base isolators].
12. Hanging Vibration Isolators
    a. Provide hanging vibration isolators when fan is supported from structure above. Vibration isolators shall be spring hanging isolator].

2.3 PROPELLER FANS

A. Manufacturers
   1. Hartzell Fans
   2. New York Blower
   3. Twin City Fans
   4. Loren Cook
   5. Or equal

B. Description: Provide belt-driven, axial type sidewall fan. Propellers shall be statically and dynamically balanced and set in a deep spun venturi orifice. Blades shall be fabricated from cast aluminum and factory-adjusted for pitch. Blades shall be of the low noise design. Provide internal vibration isolation. Fans shall be mounted in steel panel and boot.

C. Materials and Construction:
   1. Frame and Panel Assemblies
      a. Drive frame and panel assemblies shall be painted steel. Drive frames shall be formed channels and fan panels shall have pre-punched mounting holes, formed flanges and a deep formed inlet venturi. Drive frames and panels shall be bolted and welded construction.
   2. Shafts
      a. Ground and polished steel fan shafts shall be mounted in permanently lubricated, sealed ball bearing pillow blocks. Bearings shall be selected for a minimum (L10) life in excess of 100,000 hours at maximum cataloged

operating speeds. Drives shall be sized for a minimum of 150 percent of drive horsepower. Pulleys shall be of the fully machined cast iron type, keyed and securely attached to wheel and motor shafts. Motor sheaves shall be adjustable for system balancing.

3. Motors
   a. Motors shall be premium efficiency type, carefully matched to the fan load and furnished at the specified voltage, phase and enclosure.
4. Disconnect Switch
   a. Provide factory-mounted and wired disconnect switch. Disconnect switch shall be:

1)	NEMA 1	General Purpose
2)	NEMA 3R	Rainproof
3)	NEMA 4	Watertight
4)	NEMA 3R & NEMA 4R	Heavy Duty
5)	NEMA 7 & 9	Class 1 and Class 2 hazardous locations
6)	NEMA 12	Industrial

5. Wall Collar
   a. Shall be constructed of galvanized steel, painted steel, with heavy gauge mounting flanges and pre-punched mounting holes.
6. Backdraft Damper
   a. Backdraft dampers shall be galvanized frame, aluminum blades and vinyl blade seals.
7. Wall Housing with Guard
   a. Wall housing with guard shall be constructed of galvanized steel (painted steel optional) with heavy gauge mounting flanges and prepunched mounting holes. Protective guards of welded steel wire completely protect the drive side of the wall housing.
8. Damper Guards
   a. Damper guards shall completely enclose the damper or wall openings on the discharge side of the fan. They shall be constructed of expanded galvanized steel screen in galvanized steel frames. Mounting flanges shall be pre-punched mounting holes.
9. Weather Hood
   a. Weather hood shall be constructed of galvanized steel with wire mesh birdscreen. Mounting flanges shall be pre-punched mounting holes. Provide insect screen.
10. Motor Guard
    a. Guards shall be constructed of welded steel wire, enclosing completely fan motor and drive assembly.
11. Finish
    a. The fan and all accompanying accessory items shall have a factory-applied finish. The finish shall be enamel paint.

2.4 WALL EXHAUST FAN

A. Manufacturers:
   1. New York Blower
   2. Twin City Fans
   3. Loren Cook
   4. Or equal

B. Description: Provide where indicated centrifugal wall ventilators. Exhaust fans shall be centrifugal with motor, shaft, bearings, and V-belt drive completely out of the air stream.

C. Materials and Construction:

1. Construction
   a. Centrifugal extruded aluminum true airfoil wheel, heli-arc welded with non-overloading characteristics. Units shall have the motor mounted in a weather-tight compartment separate from the exhaust stream with adjustable motor sheave and base. Provide internal vibration isolation. Lubricating tubes shall be provided from the shaft bearing to the housing for lubrication.
2. Motor
   a. Motors shall be premium efficiency type, matched to the fan load, and shall be mounted out of the air stream.
3. Shafts
   a. Fan shafts shall be ground and polished grade 1045 steel sized so that the first critical speed is at least 25% over the maximum operating speed.
4. Disconnect
   a. Provide factory-mounted and wired NEMA 1 disconnect.
5. Dampers
   a. Provide gravity-operated backdraft dampers.
6. Finish
   a. Provide baked enamel finish, color as per plan.

2.5 CEILING EXHAUST FAN

A. Manufacturers:

1. Greenheck
2. Penn Ventilator
3. Loren Cook
4. Or equal

B. Materials and Construction:

1. Fan Housing
   a. Fan housing and scroll shall be constructed of galvanized steel with the housing interior lined with sound absorbing insulation. Provide angle mounting brackets [and inlet grille].
2. Fan Wheel
   a. Fan wheel shall be forward curve design, steel construction, dynamically balanced at the factory. Provide internal vibration isolation.
3. Motor
   a. Motors shall be provided with built-in thermal overload protection, mounted on vibration isolators and selected to match the fan loads. Provide means of disconnecting the power assembly (plug). Electrical characteristics and horsepower shall be as indicated.
4. Vibration Isolation
   a. Provide vibration isolation kit, including neoprene vibration isolators.

2.6 CABINET FANS

A. Manufacturers:

1. Greenheck
2. Twin City Fans
3. Loren Cook
4. Or equal

B. Description: Cabinet fans shall be constructed of galvanized steel. Fan wheels shall be high efficiency and quiet operation.

C. Materials and Construction:

1. Motors
   a. Motors shall be premium efficiency type, mounted on internal neoprene isolators. The motor base shall be adjustable for belt tensioning.
2. Drives
   a. Drives shall be sized for a minimum of 150% of driven horsepower. Pulleys shall be machined cast iron and adjustable for final system balancing.
3. Shafts
   a. Shafts shall be ground and polished steel shafts sized so that the critical speed is at least 25% over the maximum operating speed.
4. Bearings
   a. Bearings shall be permanently sealed ball type set in pillow block mounts and shall be selected for a minimum (L50) life in excess of 200,000 hours at maximum cataloged operating speeds.
5. Insulated Housing
   a. The interior of the fan housing shall be lined with fiberglass duct liner.
6. Base-Mounted Vibration Isolators
   a. Provide base-mounted vibration isolators when fan is free standing. Vibration isolators shall be [neoprene base isolators] [spring base isolators].
7. Hanging Vibration Isolators
   a. Provide hanging vibration isolators when fan is supported from structure above. Vibration isolators shall be spring hanging isolators.
8. Disconnect Switch
   a. Provide factory-mounted and wired NEMA 1 disconnect switch.
9. Access Doors
   a. Provide removable side access doors. Access doors shall provide full access to fan wheels, motors, belts and drives.

2.7 CEILING FANS

A. Manufacturers:

1. Dayton
2. Big Ass Fan Company
3. Or equal

B. Description: Ceiling fans shall be constructed of

C. Materials and Construction:

1. Motors
   a. Motors shall be premium efficiency type, mounted on internal neoprene isolators. The motor base shall be adjustable for belt tensioning.
2. Drives

a. Drives shall be sized for a minimum of 150% of driven horsepower. Pulleys shall be machined cast iron and adjustable for final system balancing.

3. Shafts
   a. Shafts shall be ground and polished steel shafts sized so that the critical speed is at least 25% over the maximum operating speed.
4. Bearings
   a. Bearings shall be permanently sealed ball type set in pillow block mounts and shall be selected for a minimum (L50) life in excess of 200,000 hours at maximum cataloged operating speeds.
5. Insulated Housing
   a. The interior of the fan housing shall be lined with fiberglass duct liner.
6. Base-Mounted Vibration Isolators
   a. Provide base-mounted vibration isolators when fan is free standing. Vibration isolators shall be [neoprene base isolators] [spring base isolators].
7. Hanging Vibration Isolators
   a. Provide hanging vibration isolators when fan is supported from structure above. Vibration isolators shall be spring hanging isolators.
8. Disconnect Switch
   a. Provide factory-mounted and wired NEMA 1 disconnect switch.
9. Access Doors
   a. Provide removable side access doors. Access doors shall provide full access to fan wheels, motors, belts and drives.

PART 3 - EXECUTION

3.1 EXAMINATION

A. Examine areas and conditions for compliance with manufacturer's installation recommendations and requirements.

B. Examine walls, floors, roofs, and concrete bases for suitable conditions for installation, for example, all overhead work of other trades is complete.

C. Verify that ground connections are in place and that installation of grounding described in Section "Grounding" is complete.

D. Proceed with installation only after unsatisfactory conditions have been corrected.

3.2 INSTALLATION

A. Install HVAC Fans as shown on the Contract Drawings and in accordance with the manufacturer's installation instructions.

B. Roof fans and intake hoods shall be installed with a rubber gasket between the unit's base and the roof curb. The curb cap shall be securely mounted to the roof curb.

C. Vibration Isolators for fans shall be internally isolated by the manufacturer.

3.3 MANUFACTURER'S FIELD SERVICES

A. Engage a factory-authorized service representative to perform the following inspections, checks, and supervision of testing:

1. Inspect field-assembled components, equipment installation, and electrical connections for compliance with the manufacturer's installation recommendations and requirements.
2. Set field-adjustable settings to the values recommended by the equipment manufacturer.
3. Test and adjust controls and safety devices. Replace damaged and malfunctioning controls and components.
4. Supervise tests performed by independent testing firms. Witness initial energization and perform or supervise startup services.
5. Prepare written report to record the following:
   a. Inspections and checks carried out on site.
   b. Test procedures used.
   c. Test results that comply with requirements.
   d. Test results that do not comply with requirements and corrective action taken to achieve compliance with requirements.

3.4 DEMONSTRATION AND TRAINING

A. Engage a factory-authorized service representative to train Owner's maintenance personnel to adjust, operate, and maintain the equipment.

1. Train Owner's maintenance personnel as described in Section HVAC Fans for a minimum of 4 hours on procedures and schedules for energizing and de-energizing, troubleshooting, servicing, and maintaining equipment and schedules.
2. Review data in Operation and Maintenance manuals.
3. Schedule training with Owner, with at least seven days advance notice.

3.5 IDENTIFICATION

A. Identify HVAC Fans as specified in the Section "Identification For HVAC Piping and Equipment".

3.6 PROTECTION

A. Protect installed equipment from damage through Substantial Completion.

END OF SECTION

SECTION 23 55 33

FUEL FIRED UNIT HEATERS

PART 1 - GENERAL

1.1 SUMMARY

A. This Section includes Propane Gas-Fired Heaters as shown on the Contract Drawings.

1.2 REFERENCES

A. Comply with the latest revision of the following codes, standards and specifications, except where more stringent requirements have been specified herein:

1. Specification section Common Work Results for HVAC.
2. Specification section Identification for HVAC Piping and Equipment.
3. Specification section Propane Piping System.
4. Specification section Testing, Adjusting and Balancing.
5. American National Standards Institute (ANSI)
   a. ANSI Z83.3/CSA 2.6 Standard for Gas Unit Heaters and Gas Fired Heat Furnances.
6. National Fire Protection Association(NFPA)
   a. NFPA 54/ANSI Z223.1 National Fuel and Gas Code

1.3 COORDINATION REQUIREMENTS

A. Coordinate layout and installation of Fuel Fired Unit Heaters with electrical equipment, light fixtures, HVAC equipment and ductwork, and piping.

1.4 SUBMITTALS

A. Submit the following in accordance with the General Provisions.

B. Product Data: “Catalog cuts” and spec sheets marked to specifically indicate the equipment and materials proposed for this project. Indicate selections with arrows, and cross out irrelevant data.

1.5 DELIVERY, STORAGE AND HANDLING

A. Coordinate delivery of Fuel Fired Unit Heaters to allow movement into designated space.

B. Handle Fuel Fired Unit Heaters components according to manufacturer's written instructions. Use factory-installed lifting provisions.

1.6 WARRANTY

A. Provide parts and labor warranty in accordance with the General Provisions.

PART 2 - PRODUCTS

2.1 PROPELLER TYPE UNIT HEATER

A. Manufacturers:

1. Gas unit heater shall be Modine Model HD or equal by Trane or Reznor.
   a. Unless otherwise indicated, separated combustion unit heater shall vent through a two-way concentric insulated roof thimble provided by the unit manufacturer.

B. Description:

1. Factory-packaged gas-fired unit heater. Unit shall be factory assembled, piped, wired, and test fired. Unit shall be CSA certified. Unit shall fire propane gas. Allowable supply pressure range shall be 11- to 14-inches water column. Unit shall conform to ANSI Z223.1. Performance shall be as scheduled on the Contract Drawings.
2. Unit shall be indirect-fired with positive pressure venting.

C. Performance/Design Criteria:

1. Casings shall be 20-gauge galvanized steel with painted finish. Side panels shall be removable for service access. Unit shall have at least two suspension points. Air discharge louvers shall have adjustable four-way deflection.
2. Gas train shall include main manual shutoff valve, main operating valve, pilot manual shutoff valve, pilot safety shutoff valve, and adjustable pilot valve.
3. Intermittent pilot ignition system shall light the pilot each firing cycle. When pilot flame is proven, main operating valve shall be energized. Pilot and burners shall be extinguished during off cycle.
4. Fan shall be propeller type. Fan shall be statically and dynamically balanced at the factory to minimize noise and vibration. Fan guard shall conform to OSHA standards.

D. Materials and Construction:

1. Heat exchanger shall be 20-gauge aluminized steel. An air pressure switch shall verify vent operation prior to energizing the gas valve. Unit shall be designed to use single-wall metal vent pipe.
2. Burner control shall be stainless steel and include a single stage gas valve. Valve shall energize heat output based on external control signal. Control system shall operate at 24 volts AC.

PART 3 - EXECUTION

3.1 EXAMINATION

A. Examine areas and conditions for compliance with manufacturer’s installation recommendations and requirements.

B. Examine roughing-in of propane fired unit heaters to verify the following:

1. Heaters are within the limitations established by the manufacturer.
2. Each utility pipe and conduit is in the correct location.

C. Examine walls, floors, roofs, and concrete bases for suitable conditions for installation, for example, all overhead work of other trades is complete.

D. Proceed with installation only after unsatisfactory conditions have been corrected.

3.2 INSTALLATION

A. Equipment shall be installed, supported, cleaned, tested, and adjusted in accordance with manufacturer's recommendations and instructions.

B. Installation of gas-fired equipment shall meet the requirements of ANSI Z223.1, and ANSI Z83.8.

C. Install piping, materials, and equipment as shown on the Contract Drawings and in accordance with the manufacturer's installation instructions.

3.3 VENT PIPE INSTALLATION

A. Vent pipe installation shall be in accordance with ANSI Z223.1, and the recommendations of the gas-fired equipment manufacturer.

B. Each gas-fired unit shall have an individual vent pipe and vent terminal.

C. Joints shall be slip-type, secured with sheet metal screws, and sealed to prevent leakage.

D. Horizontal vent piping shall be pitched 1/4-inch per foot back toward the burner.

E. Gas vent pipe within 8-0 inches of finished floor shall be insulated in accordance with the Section entitled Mechanical Insulation.

F. Intake pipes for separated combustion gas unit heaters shall be insulated in accordance with the Section "HVAC Insulation."

3.4 PAINTING

A. Perform field painting in accordance with the Section "Painting."

3.5 IDENTIFICATION

A. Identify Fuel Fired Unit Heaters as specified in Section "Identification for HVAC Piping and Equipment."

3.6 PROTECTION

A. Protect installed equipment from damage through Substantial Completion.

END OF SECTION

SECTION 23 73 13

INDOOR CENTRAL-STATION AIR HANDLING UNITS

PART 1 - GENERAL

1.1 SUMMARY

A. This Section includes Central Station Air Handling Units as shown on the Contract Drawings.

1.2 REFERENCES

A. Comply with the latest revision of the following codes, standards and specifications, except where more stringent requirements have been specified herein:

1. American Society for Testing and Materials (ASTM)
2. American National Standards Institute (ANSI)
3. National Fire Protection Association (NFPA).
4. Energy Conservation Construction Code of New York State.
5. Mechanical Code of New York State.
6. Underwriters Laboratories (UL).

1.3 COORDINATION REQUIREMENTS

A. Coordinate layout and installation of Indoor Central Station Air Handling Unit with electrical equipment, light fixtures, HVAC equipment and ductwork, and piping.

1.4 SUBMITTALS

A. Submit the following in accordance with the General Provisions.

B. In addition to those submittals identified in the General Provisions, the following shall also be submitted:

1. Provide fan curves with specified operating point clearly plotted.
2. Submit electrical requirements for power supply wiring including wiring diagrams for interlock and control wiring, clearly indicating factory-installed and field-installed wiring.

C. Product Data: “Catalog cuts” and spec sheets marked to specifically indicate the equipment and materials proposed for this project. Indicate selections with arrows, and cross out irrelevant data.

1. Product data shall indicate dimensions, weights, capacities, ratings, fan performance, motor electrical characteristics, and gauges and finishes of materials.
2. Submit product data of filter media, filter performance data, filter assembly, and filter frames.

D. Shop Drawings:

1. Shop drawings shall indicate assembly, unit dimensions, weight loading, required clearances, construction details, and field connection details.

E. Manufacturer Instructions:

1. Submit manufacturer's installation instructions.

1.5 QUALITY ASSURANCE

A. Qualifications

1. Manufacturer's Factory Qualifications: Manufacturing facilities shall have accreditation to ISO 9000:2000 or an equivalent quality management system acceptable to the Engineer.

1.6 DELIVERY, STORAGE AND HANDLING

A. Deliver Indoor Central Station Air Handling Unit in shipping splits that can be moved past obstructions in the delivery path.

B. Coordinate delivery of Central Station Air Handling Unit to allow movement into designated space.

C. Handle Indoor Central Station Air Handling Unit components according to manufacturer's written instructions. Use factory-installed lifting provisions.

1.7 WARRANTY

A. Provide parts and labor warranty in accordance with the General Provisions.

PART 2 - PRODUCTS

2.1 GENERAL

A. Provide air handling unit as shown and scheduled on the Contract Documents. All internal components specified in the air handling unit schedule shall be factory furnished, installed and shipped. Unit capacity shall meet or exceed that indicated in the schedules.

2.2 UNIT CASING

A. The entire unit shall be provided with a full-length, continuous, base rail channel. Base rail channels will be formed of a minimum of 12 gauge galvanized steel. All major components shall be supported from the base. Integral lifting lugs shall be provided to facilitate rigging and installation. Lifting lugs shall be suitable for use as unit tie down points.

B. The unit shall have a frame construction consisting of integral galvanized steel vertical and horizontal structural members. The frame shall be constructed to permit complete removal of the wall and roof panels without affecting the structural integrity of the unit.

2.3 PANEL CONSTRUCTION

A. All panels shall be completely gasketed prior to shipment with a minimum of 1/4-inch thick and 3/4-inch wide closed cell neoprene.

B. All panels shall be insulated with 2-inch – 1.5 lb insulation. The panel insulation must be a full 2 inches (non-compressed) throughout the entire unit. The insulation shall meet the flame and smoke generation requirements of NFPA-90A.

C. All wall and roof panels shall be completely removable for unit access and removal of components. All panels shall be removable without affecting the structural unit frame.

D. All panels and floors shall be double wall and shall be constructed of G90 mil galvanized sheet steel, formed and reinforced to provide a rigid assembly. The exterior casing shall be constructed of a minimum of 18 gauge galvanized steel. The interior lining shall be a [solid] [perforated] lining of a minimum of 20 gauge galvanized steel.

2.4 ACCESS DOORS

A. Double wall access doors shall be provided in the fan, filter and inlet segments of the unit on the drive side of the unit. Access doors must also be provided on both sides of the unit in all segments constructed with welded panels.

B. Doors shall be double-wall construction with a solid liner and a minimum thickness of 2 inches. Doors shall be attached to the unit with a continuous, full-length piano-type stainless steel hinge. Latches shall be positive, action, creating an air-tight seal between the door and unit.

2.5 CASING FINISH

A. The exterior of the unit shall be completely cleaned prior to application of finished coats. A prime coat of epoxy chromate shall be applied to a minimum thickness of 1.5 mils. A finish coat of acrylic alkyd enamel shall then be applied to a minimum thickness of 2.5 mils.

B. When tested in accordance with ASTM B-117, the finished unit shall exceed 125-hour salt spray solution (5%) without any sign of red rust.

2.6 SWSI CENTRIFUGAL FANS

A. The fan segment shall be equipped with single width, single inlet (SWSI) centrifugal type wheels. All fans shall have airfoil blades.

B. All airfoil fans shall bear the AMCA Seal. Airfoil fan performance shall be based on tests made in accordance with AMCA Standard 210 and comply with the requirements of the AMCA-certified ratings program for air and sound. In addition, all airfoil wheels shall comply with AMCA Standard 99-2408-69 and 99-2401-82.

C. The fan discharge shall be connected to the fan cabinet using a flexible connection to insure vibration free operation. The isolator support rail shall be structurally supported from the unit base. Cantilever supports on the isolator support base are unacceptable.

D. Fan and motor shall be internally mounted and isolated on a full width isolator support channel using 1-inch springs.

E. Fan motors shall be NEMA design ball-bearing type with electrical characteristics and horsepower as specified. Motors shall be 1750 RPM, open drip proof type. The motor shall be located within the unit on an adjustable base.

2.7 BEARINGS AND DRIVES

A. Fan bearings shall be self-aligning, pillow-block or flanged type re-greasable ball bearings and shall be designed for an average life (L50) of at least 200,000 hours. All bearings shall be factory lubricated and equipped with standard hydraulic grease fittings and lube lines extended to the motor side of the fan.

B. Fan drives shall be selected for a [1.2] [1.5] service factor and anti-static belts shall be furnished.

2.8 FAN SHAFTS

A. Fan shaft shall be selected to operate well below the first critical speed and each shaft shall be factory coated after assembly with an anti-corrosion coating.

2.9 FILTERS

A. The filter frames shall be constructed of galvanized steel and be built as an integral part of the unit. All filter segments shall be side service [HEPA Filter Segments shall be front loading] with a standard access door on the drive side of the unit.

B. A magnahelic, differential pressure gauge shall be factory installed and flush mounted on drive side to measure the pressure drop across the pre-filter only.

C. Flat Filters. Flat filter segments shall accommodate 2 inch media. The 2 inch media shall be throwaway.

2.10 DISCHARGE PLENUM

A. A discharge plenum segment shall be provided with a horizontal discharge opening.

2.11 LOW LEAK DAMPERS

A. Dampers shall be of low leak design having stamped 16 gauge galvanized steel blades. The damper blades shall be provided with extruded vinyl edge seals and stainless steel jamb seals. Leakage shall not exceed 4.8 inches cfm/sq. ft. @ 1 inch w.g. The blades shall be parallel acting.

2.12 ACCESS SEGMENT

A. Access Segment shall be provided for placement anywhere in the unit to gain access to a particular area. The access segment shall be available with a depth of [24 inches or 30 inches]. The access segment shall be provided with a door as standard on the drive side of the unit.

2.13 FACTORY START-UP

A. A factory employed technician shall be present for unit start-up and specific calibration of control components.

2.14 SINGLE POINT CONNECTION

A. Unit shall be equipped with a single point electrical connection consisting of a disconnect branch fusing as required by standards referenced below, motor starters, control panels, lights, transformers, and wiring to all motors. The panels and all associated components shall be U.L. listed. All wiring shall comply with N.E.C. The panel shall contain a single point power connection, single-speed fan motor contactor(s) with overload device(s), three-phase ambient compensated overload heater elements, two primary control fuses, one secondary control line size fuse, terminal strip and on/off auto switch. In addition, the motor control panel shall contain a transformer for lights, receptacles and control devices.

B. A single panel enclosure containing supply and return fan motor starters shall be provided with separate on/off/auto switches when a return air fan is specified.

2.15 UNIT MOUNTED DISCONNECT

A. Each unit shall be equipped with a unit mounted nonfused disconnect. The disconnect shall be in a separate NEMA 3R enclosure.

2.16 MANUFACTURERS

A. The following manufacturers are named to establish a standard of quality necessary for the Project:

B. York “Air Pak,” McQuay “Vision” or Trane “MCC.”

2.17 GENERAL

A. All air-handling units shall be supplied as a complete package from the air-handling unit manufacturer, who shall be responsible for proper operation of the coordinated system.

B. All components of like size and type shall be the product of the same manufacturer for purposes of parts interchangeability.

2.18 SOURCE QUALITY CONTROL

A. Factory Quality Certification

1. Submit copy of factory quality assurance certificate.

B. Factory Assembly

1. Air Handling Unit shall be manufactured in accordance with the factory quality certification documents.

C. Factory Test

1. Each Air Handling Unit shall be factory tested as follows:
   a. Manufacturer’s standard inspections and tests

2. Submit factory test report for approval prior to shipment.

2.19 SHOP FINISHES

A. Finish: ANSI 61 light gray paint.

B. With the exception of those parts and components customarily furnished unpainted, prepare and coat all metal surfaces with rust inhibitive shop paint. Shop paint shall be fully compatible with the field paint specified.

C. Protect machined surfaces against damage and corrosion by other means.

PART 3 - EXECUTION

3.1 GENERAL

A. Verify that proper power supply is available.

3.2 EXAMINATION

A. Examine areas and conditions for compliance with manufacturer's installation recommendations and requirements.

B. Examine walls, floors, roofs, and concrete bases for suitable conditions for installation, for example, all overhead work of other trades is complete.

C. Verify that ground connections are in place and that installation of grounding described in Section "Grounding" is complete.

D. Proceed with installation only after unsatisfactory conditions have been corrected.

3.3 INSTALLATION

A. Install in accordance with manufacturer's printed instructions and in accordance with ARI 435.

B. Install Indoor Central Station Air Handling Unit as shown on the Contract Drawings and in accordance with the manufacturer's installation instructions.

3.4 SPARE EQUIPMENT

A. Furnish one (1) additional complete set of fan motor drive belts.

3.5 FIELD QUALITY CONTROL

A. Prepare for Acceptance Tests as follows:
1. Test insulation resistance for each feeder, and control circuit.
2. After installing equipment but before power supply is energized, verify that grounding system is completed.
3. Verify that equipment is installed and connected according to the Contract Documents.

4. Verify that electrical control wiring installation complies with manufacturer's submittal by means of point-to-point continuity testing.
5. Verify that field-installed power and control wiring complies with Division 16 requirements.
6. Verify that equipment is ready for pre-commissioning checks in accordance with manufacturer's written instructions.

B. Testing Agency: Engage a qualified independent testing agency to perform specified testing.

C. Acceptance Tests: After installing equipment and after electrical circuitry has been energized, demonstrate product capability and compliance with requirements as follows:
1. Perform visual and mechanical inspection and electrical tests according to NETA ATS, Section 7, as it applies to all installed systems and devices. Certify compliance with the following test parameters:
   a. Switchgear: Perform tests and inspections stated in NETA ATS, Section 7.1.
   b. Circuit Breakers: Perform tests and inspections stated in NETA ATS, Section 7.6.
   c. Protective Relays: Perform tests and inspections stated in NETA ATS, Section 7.9.
   d. Instrument Transformers: Perform tests and inspections stated in NETA ATS, Section 7.10.
   e. Metering and Instrumentation: Perform tests and inspections stated in NETA ATS, Section 7.11.
   f. Ground-Fault Systems: Perform tests and inspections stated in NETA ATS, Section 7.14.
   g. Surge Arresters: Perform tests and inspections stated in NETA ATS, Section 7.19.
2. Correct malfunctioning units on-site, where possible, and retest to demonstrate compliance; otherwise, replace with new units and retest.

3.6 MANUFACTURER’S FIELD SERVICES

A. Engage a factory-authorized service representative to perform the following inspections, checks, and supervision of testing:
1. Inspect field-assembled components, equipment installation, and electrical connections for compliance with the manufacturer’s installation recommendations and requirements.
2. Set field-adjustable settings to the values recommended by the equipment manufacturer.
3. Test and adjust controls and safety devices. Replace damaged and malfunctioning controls and components.
4. Supervise tests performed by independent testing firms. Witness initial energization and perform or supervise startup services.
5. Prepare written report to record the following:
   a. Inspections and checks carried out on site.
   b. Test procedures used.
   c. Test results that comply with requirements.
   d. Test results that do not comply with requirements and corrective action taken to achieve compliance with requirements.

3.7 DEMONSTRATION AND TRAINING

A. Engage a factory-authorized service representative to train Owner's maintenance personnel to adjust, operate, and maintain the equipment.

1. Train Owner's maintenance personnel for a minimum of 4 hours on procedures and schedules for energizing and de-energizing, troubleshooting, servicing, and maintaining equipment and schedules.
2. Review data in Operation and Maintenance manuals.
3. Schedule training with Owner, with at least seven days advance notice.

3.8 IDENTIFICATION

A. Identify Air Handling Unit as specified in the Section "Identification for HVAC Piping and Equipment."

B. Operating Instructions: Frame printed operating instructions. Fabricate frame of finished wood or metal and cover instructions with clear acrylic plastic. Mount on front of switchgear.

3.9 PROTECTION

A. Protect installed equipment from damage through Substantial Completion.

END OF SECTION

SECTION 23 81 13

PACKAGED TERMINAL AIR-CONDITIONERS

PART 1 - GENERAL

1.1 SUMMARY

A. This Section includes Packaged Terminal Air Conditioners as shown on the Contract Drawings.

1.2 REFERENCES

A. Comply with the latest revision of the following codes, standards and specifications, except where more stringent requirements have been specified herein:

1. American Society for Testing and Materials (ASTM)
2. American National Standards Institute (ANSI)
3. ANSI/NFPA 90A - Installation of Air-conditioning and Ventilation Systems.
4. ARI 210 - Unitary Air Conditioning Equipment.

1.3 COORDINATION REQUIREMENTS

A. Coordinate layout and installation of Packaged Terminal Air Conditioners with electrical equipment, light fixtures, HVAC equipment and ductwork, and piping.

1.4 SUBMITTALS

A. Submit the following in accordance with the General Provisions.

B. In addition to those submittals identified in the General Provisions, the following shall also be submitted:

1. Indicate locations of drain and electrical rough-in connections on product data.
2. Submit color chart for color selection by Owner’s Representative.
3. Submit operation and maintenance data.

C. Product Data: “Catalog cuts” and spec sheets marked to specifically indicate the equipment and materials proposed for this project. Indicate selections with arrows, and cross out irrelevant data.

1.5 QUALITY ASSURANCE

A. Qualifications

1. Manufacturer’s Factory Qualifications: Manufacturing facilities shall have accreditation to ISO 9000:2000 or an equivalent quality management system acceptable to the Engineer.

1.6 DELIVERY, STORAGE AND HANDLING

A. Handle Packaged Terminal Air Conditioners components according to manufacturer's written instructions. Use factory-installed lifting provisions.

PART 2 - PRODUCTS

2.1 PACKAGED TERMINAL AIR CONDITIONING

A. Manufacturers:

1. Trane.
2. McQuay.
3. York.

B. Description:

1. Manufactured Units
   a. Provide packaged, factory assembled units with refrigerant cooling coil, electric heating coil, fans, filters, architectural wall louver, and unit mounted temperature controls.

C. Performance/Design Criteria:

1. Cooling Chassis: The cooling chassis shall be slide-in, plug-in with a self-contained, hermetically sealed refrigerant circuit. All chassis sheet metal parts shall be constructed of heavy-gauge steel and coated with oven-baked epoxy powder paint for maximum corrosion protection. The chassis shall be insulated with a waterproof material to prevent sweating and reduce sound levels.
   a. The cooling chassis shall consist of the following components:
      1) Vibration isolated, permanent split capacitor, rotary-type compressor with built-in thermal overload.
      2) Rifled copper-tubed evaporator (indoor) and condenser (outdoor) coils with high efficiency raised lance aluminum plate fins mechanically expanded to the tubes for maximum heat transfer.
      3) Capillary restrictor type refrigerant metering device supplemented with a constant pressure automatic expansion valve.
      4) Coils shall be factory tested at 300 psig.
   b. The condenser airflow system shall consist of:
      1) Single speed PSC motor which shall be totally enclosed and permanently lubricated with external oilers for prolonged life.
      2) Aluminum blade centrifugal fan which shall be forward curved and statically and dynamically balanced to provide for quiet and smooth operation.
   c. The cooling chassis shall be furnished with:
      1) Positive closing, automatic, motorized outdoor air damper that opens whenever the indoor fan is energized, except during night set-back operation.
      2) Toggle switch for manual override of the damper.
   d. During the cooling cycle, the compressor and both the outdoor/condenser and indoor/evaporator fan motors shall be energized. Condensation accumulated in the indoor/evaporator drain pan shall be drained into the outdoor section of the unit where it is to be completely removed by evaporation. Evaporation shall be accomplished by uniformly distributing the condensate over the condenser coil via airflow generated by the outdoor/condenser fan. Condensate shall not come in contact with fan or fan motor. Slinger rings and propeller fans are not an acceptable solution for condensate removal.

2. Heating Section: The heat section shall be separate from the cooling chassis and shall incorporate an indoor/evaporator fan assembly. This assembly shall consist of two centrifugal fans that are forward curved and constructed out of aluminum with steel hubs and directly connected to a two-speed motor. Fans shall be statically and dynamically balanced to provide for quiet and smooth operation. The indoor/evaporator fan motors shall be two-speed, permanent split capacitor, totally enclosed and permanently lubricated with external oilers for prolonged life. Built-in overload protection shall come standard with the motor.
   a. Electric Resistance Heat Only Models. During the heating cycle, only the indoor/evaporator fan motor and electric resistance heaters shall be energized. The outdoor/condenser fan motor and compressor shall not be energized. Heaters shall be open wire type with quick response and high limit cutout. Electric resistance heaters shall be sized to meet heating requirements as shown on the schedule and/or specifications. Electric resistance heaters must not be visible or accessible through the indoor discharge grill. An electrical junction box shall be furnished for connection to the field-supplied power source. Additionally, a disconnect plug shall be factory installed for quick connection to the control box.
   b. Hydronic Heat Models. The heating coil shall be suitable for hot water or steam supply and have a factory furnished [normally open] [normally closed] two-way control valve. During the heating cycle only the indoor/evaporator fan motor, the control valve and automatic fresh air damper shall be energized. The outdoor/condenser fan motor and compressor shall not be energized. The heating coil shall have copper tubes with aluminum finish mechanically bonded for maximum heat transfer. Return piping shall be 5/8 inch outside diameter plain copper tube.
3. Control Box: The control box shall be a separate component with plug-in connections to the heating section and cooling chassis.
   a. For sizes up to 14,000 Btuh, a concealed switch shall be furnished to automatically cycle or provide constant operation of the indoor fans. When placed in “cycle” mode, the indoor/evaporator fans shall be automatically controlled by the thermostat when the HEAT, COOL, or FAN modes are selected. When placed in “Constant” mode, the fan shall run continuously except when the STOP button is depressed.
   b. Unit sizes above 14,000 Btuh shall be furnished with constant fan operation only.
   c. The control overlay shall be designed for the visually impaired by containing large, raised function indicators and color-coded selector buttons placed on a white polycarbonate membrane. Raised function indicators shall conform to standards set by the National Federation of the Blind and comply with the federally mandated American Disabilities Act (ADA).
4. Outdoor Air Dampers: Units shall be furnished with an automatic outdoor air damper as standard. The automatic damper is wired in parallel to the indoor fan safety. If the unit is placed in the “Cycle” mode, the fan and damper shall cycle as the thermostat cycles. If the unit is placed in the “Constant” mode, the fan shall run continuously and the damper shall remain open.
   a. Unit shall be equipped with an automatic damper override feature such that cold air is prevented from entering the occupied space when the unit is simply bringing the room back to the night setback temperature. Since NSB is used when the room is unoccupied, there is no reason to introduce outside air during this cycle.

D. Materials and Construction:

1. Room Cabinet: The room cabinet shall be made of heavy-gauge steel and coated with oven-baked polyurethane powder paint for maximum protection. To accommodate various wall opening locations and floor irregularities, an adjustable kick-plate shall be furnished with a standard adjustment of 1 inch. A removable front panel shall be supplied for service access of the filter, electrical connections, cooling chassis and heat section. Hidden latches shall be provided to prevent unauthorized personnel from removing the front panel. Indoor air discharge grilles shall be four-way positional extruded aluminum covered with an oven-baked epoxy powder paint for maximum protection.
2. Wall Box: The wall box shall be constructed from 16-gauge steel and welded for strength and durability. Once assembled, the wall box shall be coated with an oven-baked epoxy powder paint to assure maximum corrosion protection.
3. Filtration: Filtration shall be accomplished using a permanent, cleanable aluminum wire mesh filter.
4. Outside Air Louvers: Outside air louvers shall be extruded architectural anodized aluminum as shown on the Contract Drawings. Louver shall be finished natural as shown on the schedule.

PART 3 - EXECUTION

3.1 EXAMINATION

A. Examine areas and conditions for compliance with manufacturer's installation recommendations and requirements.

B. Examine walls, floors, roofs, and concrete bases for suitable conditions for installation, for example, all overhead work of other trades is complete.

C. Verify that ground connections are in place and that installation of grounding described in Section "Grounding" is complete.

D. Proceed with installation only after unsatisfactory conditions have been corrected.

3.2 INSTALLATION

A. Install Packaged Terminal Air Conditioners as shown on the Contract Drawings and in accordance with the manufacturer's installation instructions.

B. Coordinate installation of units with architectural and electrical work.

C. Supply units fully charged with refrigerant and filled with oil.

3.3 IDENTIFICATION

A. Identify Packaged Terminal Air-Conditioners as specified in Section "Identification for HVAC Piping and Equipment."

3.4 PROTECTION

A. Protect installed equipment from damage through Substantial Completion.

END OF SECTION

SECTION 22 05 00

COMMON WORK RESULTS FOR PLUMBING

PART 1 - GENERAL

1.1 SUMMARY

A. This Section includes the following basic mechanical materials and methods to complement other Division 22 Sections.

1. Pipe joint materials.
2. Transition fittings.
3. Dielectric fittings.
4. Sleeves.
5. Mechanical sleeve seals.
6. Escutcheons.
7. Grout.
8. Fabricated metal equipment supports.
9. Installation requirements common to mechanical specification Sections.
10. Piping joint construction.
11. Cutting and patching.
12. Arc welding precautions

B. Pipe and pipe fitting materials are specified in piping systems sections.

1.2 REFERENCES

A. Comply with the latest revision of the following codes, standards and specifications, except where more stringent requirements have been specified herein:

1. Building Code of New York State
2. Mechanical Code of New York State
3. Plumbing Code of New York State
4. American Society of Mechanical Engineers (ASME)
5. American National Standards Institute (ANSI)
6. National Fire Protection Association (NFPA)
7. Underwriters Laboratories (UL)
8. American Society for Testing and Materials (ASTM)
9. American Welding Society (AWS)
10. Occupational Safety and Health Administration (OSHA)

B. DEFINITIONS:

1. Pipe, pipe fittings, and piping include tube, tube fittings, and tubing.
2. Finished Spaces: Spaces other than mechanical and electrical equipment rooms, furred spaces, pipe and duct shafts, unheated spaces immediately below the roof, spaces above ceilings, unexcavated spaces, crawl spaces, and tunnels.
3. Exposed Interior Installations: Exposed to view indoors. Examples include finished occupied spaces and mechanical equipment rooms.

4. Exposed Exterior Installations: Exposed to view outdoors, or subject to outdoor ambient temperatures and weather conditions. Examples include rooftop locations.
5. Concealed Interior Installations: Concealed from view and protected from physical contact by building occupants. Examples include above ceilings and in duct shafts.
6. Concealed Exterior Installations: Concealed from view and protected from weather conditions and physical contact by building occupants, but subject to outdoor ambient temperatures. Examples include installations within unheated shelters.
7. The following are industry abbreviations for plastic materials:
   a. ABS: Acrylonitrile-butadiene-styrene plastic.
   b. CPVC: Chlorinated polyvinyl chloride plastic.
   c. PE: Polyethylene plastic.
   d. PVC: Polyvinyl chloride plastic.
8. The following are industry abbreviations for rubber materials:
   a. EPDM: Ethylene-propylene-diene terpolymer rubber.
   b. NBR: Acrylonitrile-butadiene rubber.

1.3 SUBMITTALS

A. Submit the following in accordance with the General Provisions.

B. Product Data: "Catalog cuts" and spec sheets marked to specifically indicate the equipment and materials proposed for this project. Indicate selections with arrows, and cross out irrelevant data. Submit product data for following items:
   1. Mechanical sleeve seals.
   2. Transition fittings.
   3. Dielectric fittings.
   4. Escutcheons.

1.4 WARRANTY

A. Provide parts and labor warranty in accordance with the General Provisions.

PART 2 - PRODUCTS

2.1 PIPE JOINING MATERIALS

A. Materials and Construction:
   1. Refer to individual piping system specification Sections in Division 22 for special joining materials not listed below.
   2. Solder Filler Metal: ASTM B32.
      a. Alloy Sn95 or Alloy Sn94: Tin (approximately 95 percent) and silver (approximately 5 percent), having 0.10 percent lead content.
      b. Alloy Sn50: Tin (50 percent) and lead (50 percent).
      c. Alloy E: Tin (approximately 95 percent) and copper (approximately 5 percent), having 0.10 percent maximum lead content.

d. Alloy HA: Tin-antimony-silver-copper-zinc, having 0.10 percent maximum lead content.
e. Alloy HB: Tin-antimony-silver-copper-nickel, having 0.10 percent maximum lead content.
f. Alloy Sb5: Tin (95 percent) and antimony (5 percent), having 0.20 percent maximum lead content.

3. Brazing Filler Metals: AWS A5.8.
   a. BcuP Series: Copper-phosphorus alloys.
   b. Bag1: Silver alloy.
4. Welding Filler Metals: Comply with AWS D10.12 for welding materials appropriate for wall thickness and chemical analysis of steel pipe being welded.
5. Solvent Cements: Manufacturer's standard solvents complying with the following:
   a. Acrylonitrile-Butadiene-Styrene (ABS): ASTM D2235.
   b. Chlorinated Poly (Vinyl Chloride) (CPVC): ASTM F493.
   c. Poly (Vinyl Chloride) (PVC): ASTM D2564.
   d. PVC to ABS Transition: Made to requirements of ASTM D3138, color other than orange.

2.2 TRANSITION FITTINGS

A. Materials and Construction:

1. Plastic-to-Metal Transition Fittings: CPVC and PVC one-piece fitting with manufacturer's Schedule 80 equivalent dimensions; one end with threaded brass insert, and one solvent-cement-joint end.
   a. Manufacturers:
      1) Eslon Thermoplastics.
      2) Or equal
2. Plastic-to-Metal Transition Adaptors: One-piece fitting with manufacturer's SDR 11 equivalent dimensions; one end with threaded brass insert, and one solvent-cement-joint end.
   a. Manufacturers:
      1) Thompson Plastics, Inc.
      2) Or equal.
3. Plastic-to-Metal Transition Unions: MSS SP-107, CPVC and PVC four-part union. Include brass end, solvent-cement-joint end, rubber O-ring, and union nut.
   a. Manufacturers:
      1) NIBCO INC.
      2) Or equal.
4. Flexible Transition Couplings for Underground Nonpressure Drainage Piping: ASTM C1173 with elastomeric sleeve, ends same size as piping to be joined, and corrosion-resistant metal band on each end.
   a. Manufacturers:
      1) Cascade Waterworks Mfg. Co.
      2) Fernco, Inc.
      3) Mission Rubber Company.
      4) Plastic Oddities, Inc.
      5) Or equal.

2.3 DIELECTRIC FITTINGS

A. Manufacturers:

1. Capitol Manufacturing Co.
2. Central Plastics Company.
3. Eclipse, Inc.
4. Epco Sales, Inc.
5. Hart Industries
6. International, Inc.
7. Watts Industries, Inc.
8. Water Products Div.
9. Zurn Industries, Inc.
10. Wilkins Div.
11. Or equal

B. Description: Combination fitting of copper alloy and ferrous materials with threaded, solder-joint, plain, or weld-neck end connections that match piping system materials.

C. Performance/Design Criteria:

1. Insulating Material: Suitable for system fluid, pressure, and temperature.
2. Dielectric Unions: Factory-fabricated, union assembly, for 250-psig (1725-kPa) minimum working pressure at 180 deg F (82 deg C).

D. Materials and Construction:

1. Dielectric Flanges: Factory-fabricated, companion-flange assembly, for 150- or 300-psig (1035- or 2070-kPa) minimum working pressure as required to suit system pressures.
   a. Manufacturers:
      1) Capitol Manufacturing Co.
      2) Central Plastics Company.
      3) Epco Sales, Inc.
      4) Watts Industries, Inc.; Water Products Div.
      5) Or equal.
2. Dielectric-Flange Kits: Companion-flange assembly for field assembly. Include flanges, full-face- or ring-type neoprene or phenolic gasket, phenolic or polyethylene bolt sleeves, phenolic washers, and steel backing washers.
   a. Manufacturers:
      1) Advance Products & Systems, Inc.
      2) Calpico, Inc.
      3) Central Plastics Company.
      4) Pipeline Seal and Insulator, Inc.
      5) Or equal.
   b. Separate companion flanges and steel bolts and nuts shall have 150- or 300-psig minimum working pressure where required to suit system pressures.
3. Dielectric Couplings: Galvanized-steel coupling with inert and noncorrosive, thermoplastic lining; threaded ends; and 300-psig minimum working pressure at 225 deg F.
   a. Manufacturers:
      1) Calpico, Inc.

2) Lochinvar Corp.
3) Or equal.

4. Dielectric Nipples: Electroplated steel nipple with inert and noncorrosive, thermoplastic lining; plain, threaded, or grooved ends; and 300-psig minimum working pressure at 225 deg F.
   a. Manufacturers:
      1) Perfection Corp.
      2) Precision Plumbing Products, Inc.
      3) Sioux Chief Manufacturing Co., Inc.
      4) Victaulic Co. of America.
      5) Or equal.

2.4 SLEEVES

A. Materials and Construction:

1. Galvanized-Steel Sheet: 0.0239-inch minimum thickness; round tube closed with welded longitudinal joint.
2. Steel Pipe: ASTM A53, Type E, Grade B, Schedule 40, galvanized, plain ends.
3. Cast Iron: Cast or fabricated “wall pipe” equivalent to ductile-iron pressure pipe, with plain ends and integral waterstop, unless otherwise indicated.
4. Stack Sleeve Fittings: Manufactured, cast-iron sleeve with integral clamping flange. Include clamping ring and bolts and nuts for membrane flashing.
   a. Underdeck Clamp: Clamping ring with set screws.
5. Molded PVC: Permanent, with nailing flange for attaching to wooden forms.
6. PVC Pipe: ASTM D1785, Schedule 40.
7. Molded PE: Reusable, PE, tapered-cup shaped, and smooth-outer surface with nailing flange for attaching to wooden forms.

2.5 MECHANICAL SLEEVE SEALS

A. Manufacturers:

1. Advance Products & Systems, Inc.
2. Calpico, Inc.
3. Metraflex Co..
4. Or equal

B. Description: Modular sealing element unit, designed for field assembly, to fill annular space between pipe and sleeve.

C. Materials and Construction:

1. Sealing Elements: EPDM or NBR interlocking links shaped to fit surface of pipe. Include type and number required for pipe material and size of pipe.
2. Pressure Plates: Stainless steel. Include two for each sealing element.
3. Connecting Bolts and Nuts: Stainless steel of length required to secure pressure plates to sealing elements. Include one for each sealing element.

2.6 ESCUTCHEONS

A. Description: Manufactured wall and ceiling escutcheons and floor plates, with an ID to closely fit around pipe, tube, and insulation of insulated piping and an OD that completely covers opening.

B. Materials and Construction:

1. One-Piece, Deep-Pattern Type: Deep-drawn, box-shaped brass with polished chrome-plated finish.
2. One-Piece, Cast-Brass Type: With set screw.
   a. Finish: [Polished chrome-plated] [Rough brass] [Polished chrome-plated and rough brass].
3. Split-Casting, Cast-Brass Type: With concealed hinge and set screw.
   a. Finish: [Polished chrome-plated] [Rough brass] [Polished chrome-plated and rough brass].
4. One-Piece, Stamped-Steel Type: With [set screw] [spring clips] [set screw or spring clips] and chrome-plated finish.
5. Split-Plate, Stamped-Steel Type: With [concealed] [exposed-rivet] hinge, [set screw] [spring clips] [set screw or spring clips], and chrome-plated finish.
6. One-Piece, Floor-Plate Type: Cast-iron floor plate.
7. Split-Casting, Floor-Plate Type: Cast brass with concealed hinge and set screw.

2.7 GROUT

A. Description: ASTM C1107, Grade B, nonshrink and nonmetallic, dry hydraulic-cement grout.

B. Materials and Construction:

1. Characteristics: Post-hardening, volume-adjusting, nonstaining, noncorrosive, nongaseous, and recommended for interior and exterior applications.
2. Design Mix: 5000-psi, 28-day compressive strength.
3. Packaging: Premixed and factory packaged.

2.8 FABRICATED METAL SUPPORTS

A. Description: Structural Steel Shapes: ASTM A36.

2.9 GENERAL

A. All components of like size and type shall be the product of the same manufacturer for purposes of parts interchangeability.

PART 3 - EXECUTION

3.1 EXAMINATION

A. Examine areas and conditions for compliance with manufacturer's installation recommendations and requirements.

B. Examine walls, floors, roofs, and concrete bases for suitable conditions for installation, for example, all overhead work of other trades is complete.

C. Proceed with installation only after unsatisfactory conditions have been corrected.

3.2 INSTALLATION

A. MECHANICAL INSTALLATIONS

1. General: Sequence, coordinate, and integrate the various elements of mechanical systems, materials, and equipment. Comply with the following requirements:
   a. Coordinate mechanical systems, equipment, and materials installation with other building components.
   b. Verify all dimensions by field measurements.
   c. Arrange for chases, slots, and openings in other building components during progress of construction, to allow for mechanical installations.
   d. Coordinate the installation of required supporting devices and sleeves to be set in poured-in-place concrete and other structural components, as they are constructed.
   e. Sequence, coordinate, and integrate installations of mechanical materials and equipment for efficient flow of the Work. Give particular attention to large equipment requiring positioning prior to closing in the building.
   f. Where mounting heights are not detailed or dimensioned, install systems, materials, and equipment to provide the maximum headroom possible.
   g. Coordinate connection of mechanical systems with exterior underground and overhead utilities and services. Comply with requirements of governing regulations, franchised service companies, and controlling agencies. Provide required connection for each service.
   h. Install systems, materials, and equipment to conform with approved submittal data, including coordination drawings, to greatest extent possible. Conform to arrangements indicated by the Contract Documents, recognizing that portions of the Work are shown only in diagrammatic form. Where coordination requirements conflict with individual system requirements, refer conflict to the Owner's Representative.
   i. Install systems, materials, and equipment level and plumb, parallel and perpendicular to other building systems and components, where installed exposed in finished spaces.
   j. Install mechanical equipment to facilitate servicing, maintenance, and repair or replacement of equipment components. As much as practical, connect equipment for ease of disconnecting, with minimum of interference with other installations. Extend grease fittings to an accessible location.

k. Install access panel or doors where units are concealed behind finished surfaces.
l. Install systems, materials, and equipment giving right-of-way priority to systems required to be installed at a specified slope.

B. PIPING INSTALLATION

1. General: Install piping as described below, except where system Sections specify otherwise. Individual piping system specification Sections in Division 22 specify piping installation requirements unique to the piping system.
2. General Locations and Arrangements: Drawings (plans, schematics, and diagrams) indicate general location and arrangement of piping systems. Indicated locations and arrangements were used to size pipe and calculate friction loss, expansion, pump sizing, and other design considerations. Install piping as indicated, except where deviations to layout are approved on coordination drawings.
3. Install piping at indicated slope.
4. Install components having pressure rating equal to or greater than system operating pressure.
5. Install piping in concealed interior and exterior locations, except in equipment rooms and service areas.
6. Install piping free of sags and bends.
7. Install exposed interior and exterior piping at right angles or parallel to building walls. Diagonal runs are prohibited, except where indicated.
8. Install piping tight to slabs, beams, joists, columns, walls, and other building elements. Allow sufficient space above removable ceiling panels to allow for ceiling panel removal.
9. Install piping to allow application of insulation plus 3-inch clearance around insulation.
10. Locate groups of pipes parallel to each other, spaced to permit valve servicing.
11. Install fittings for changes in direction and branch connections.
12. Install couplings according to manufacturer’s printed instructions.
13. Install pipe escutcheons for pipe penetrations of concrete and masonry walls, wall board partitions, and suspended ceilings in finished areas.
14. Verify final equipment locations for roughing in. Refer to equipment specifications in other Sections for roughing-in requirements.
15. Angle (wye) type strainers shall be provided with shutoff valve and cap on blowdown connection.
16. Where mains are reduced, provide eccentric reducing fittings installed with flat side on the bottom.
17. Horizontal piping shall not be installed less than 6 inches above finished floor (along walls), less than 7 ft-6 inches above finished floor (other areas), or in front of windows.
18. Piping shall be offset, relocated, or changed to clear ducts, beams, conduits and other obstacles.
19. Piping systems shall be free of noise and vibration under normal operating conditions.
20. Install piping to permit valve servicing.
21. Install escutcheons for penetrations of walls, ceilings, and floors according to the following:

a. Piping with Fitting or Sleeve Protruding from Wall: One-piece, deep-pattern type.
b. Chrome-Plated Piping: One-piece, cast-brass type with polished chrome-plated finish.
c. Insulated Piping: One-piece, stamped-steel type with spring clips.
d. Bare Piping at Wall and Floor Penetrations in Finished Spaces: One-piece, cast-brass type with polished chrome-plated finish.
e. Bare Piping at Wall and Floor Penetrations in Finished Spaces: One-piece, stamped-steel type.
f. Bare Piping at Ceiling Penetrations in Finished Spaces: One-piece, cast-brass type with polished chrome-plated finish.
g. Bare Piping in Unfinished Service Spaces: Non escutcheon.
h. Bare Piping in Equipment Rooms: No escutcheon.
i. Bare Piping at Floor Penetrations in Equipment Rooms: No escutcheon.

C. SLEEVES

1. Install sleeves for pipes passing through concrete and masonry walls, fire-rated partitions, concrete floor and roof slabs, and where indicated.
   a. Cut sleeves to length for mounting flush with both surfaces.
      1) Exception: Extend sleeves installed in floors of mechanical equipment areas or other wet areas 4 inches above finished floor level. Extend cast-iron sleeve fittings below floor slab as required to secure clamping ring where specified.
   b. Build sleeves into new walls and slabs as work progresses.
   c. Install large enough sleeves to provide 1/4-inch annular clear space between sleeve and pipe or pipe insulation. Use the following sleeve materials:
      1) Steel Pipe Sleeves: For pipes smaller than 6 inches.
      2) Steel Sheet-Metal Sleeves: For pipes 6 inches and larger that penetrate gypsum-board partitions.
      3) Cast Iron Sleeve Fittings: For floors having membrane waterproofing. Secure flashing between clamping flanges. Install section of cast-iron soil pipe to extend sleeve to 2 inches above finished floor level.
   d. Seal space outside of sleeve fittings with nonshrink, nonmetallic grout.
   e. Except for below-grade wall penetrations, seal annular space between sleeve and pipe or pipe insulation, using elastomeric joint sealants specified in Division 7 Section “Joint Sealants.”
   f. Above Grade, Exterior Wall, Pipe Penetrations: Seal penetrations using sleeves and mechanical sleeve seals. Size sleeve for 1-inch annular clear space between pipe and sleeve for installation of mechanical seals.
      1) Install steel pipe for sleeves smaller than 6 inches.
      2) Install cast-iron wall pipes for sleeves 6 inches and larger.
      3) Assemble and install mechanical seals according to manufacturer’s printed instructions.
   g. Below Grade, Exterior Wall, Pipe Penetrations: Install cast-iron wall pipes for sleeves. Seal pipe penetrations using mechanical sleeve seals. Size sleeve for 1-inch annular clear space between pipe and sleeve for installation of mechanical seals.

h. Below Grade, Exterior Wall, Pipe Penetrations: Install ductile-iron wall penetration system sleeves according to manufacturer's printed installation instructions.
i. Fire Barrier Penetrations: Maintain indicated fire rating of walls, partitions, ceilings, and floors at pipe penetrations. Seal pipe penetrations with firestopping sealant material. Firestopping materials are specified in Division 7 Section Penetration Firestop.

2. Sleeves are not required for core-drilled holes.

D. PIPING JOINT CONSTRUCTION

1. Join pipe and fittings according to the following requirements and Division 22 Sections specifying piping systems.
2. Ream ends of pipes and tubes and remove burrs. Bevel plain ends of steel pipe.
3. Remove scale, slag, dirt, and debris from inside and outside of pipe and fittings before assembly.
4. Soldered Joints: Apply ASTM B813, water-flushable flux, unless otherwise indicated, to tube end. Construct joints according to ASTM B828 or CDA's "Copper Tube Handbook," using lead-free solder alloy complying with ASTM B32.
5. Brazed Joints: Construct joints according to AWS's "Brazing Handbook," "Pipe and Tube" Chapter, using copper-phosphorus brazing filler metal complying with AWS A5.8.
6. Threaded Joints: Thread pipe with tapered pipe threads according to ASME B1.20.1. Cut threads full and clean using sharp dies. Ream threaded pipe ends to remove burrs and restore full inside diameter. Join pipe fittings and valves as follows:
   a. Apply appropriate tape or thread compound to external pipe threads unless dry seal threading is specified.
   b. Damaged Threads: Do not use pipe or pipe fittings with threads that are corroded or damaged. Do not use pipe sections that have cracked or open welds.
7. Welded Joints: Construct joints according to AWS D10.12, using qualified processes and welding operators according to Part 1 "Quality Assurance" Article.
8. Flanged Joints: Select appropriate gasket material, size, type, and thickness for service application. Install gasket concentrically positioned. Use suitable lubricants on bolt threads.
9. Plastic Piping Solvent-Cement Joints: Clean and dry joining surfaces. Join pipe and fittings according to the following:
   a. Comply with ASTM F402 for safe-handling practice of cleaners, primers, and solvent cements.
   b. ABS Piping: Join according to ASTM D2235 and ASTM D2661 Appendices.
   c. CPVC Piping: Join according to ASTM D2846/D2846M Appendix.
   d. PVC Pressure Piping: Join schedule number ASTM D1785, PVC pipe and PVC socket fittings according to ASTM D2672. Join other-than-schedule-number PVC pipe and socket fittings according to ASTM D2855.
   e. PVC Nonpressure Piping: Join according to ASTM D2855.
   f. PVC to ABS Nonpressure Transition Fittings: Join according to ASTM D3138 Appendix

10. Plastic Pressure Piping Gasketed Joints: Join according to ASTM D3139.
11. Plastic Nonpressure Piping Gasketed Joints: Join according to ASTM D3212.
12. PE Piping Heat-Fusion Joints: Clean and dry joining surfaces by wiping with clean cloth or paper towels. Join according to ASTM D2657.
    a. Plain-End Pipe and Fittings: Use butt fusion.
    b. Plain-End Pipe and Socket Fittings: Use socket fusion.
13. Fiberglass Bonded Joints: Prepare pipe ends and fittings, apply adhesive, and join according to pipe manufacturer's written instructions.

E. PIPING CONNECTIONS

1. Piping Connections: Except as otherwise indicated, make piping connections as specified below.
    a. Install unions in piping 2 inches and smaller adjacent to each valve and at final connection to each piece of equipment having a threaded pipe connection.
    b. Install flanges in piping 2-1/2 inches and larger adjacent to flanged valves and at final connection to each piece of equipment having flanged pipe connection.
    c. Dry Piping Systems (Gas, Compressed Air, and Vacuum): Install dielectric unions and flanges to connect piping materials of dissimilar metals.
    d. Wet Piping Systems (Water and Steam): Install dielectric coupling and nipple fittings to connect piping materials of dissimilar metals.
        1) [Where copper tube is joined to steel pipe, a section of brass pipe or a brass valve may be substituted for a dielectric fitting]. [A section of bronze pipe or a bronze valve is not acceptable].

F. EQUIPMENT INSTALLATION – COMMON REQUIREMENTS

1. Install equipment to provide the maximum possible headroom where mounting heights are not indicated.
2. Install equipment according to submittal data. Portions of the Work are shown only in diagrammatic form. Refer conflicts to the Owner's Representative.
3. Install equipment level and plumb, parallel and perpendicular to other building systems and components in exposed interior spaces, except where otherwise indicated.
4. Install mechanical equipment to facilitate servicing, maintenance, and repair or replacement of equipment components. Connect equipment for ease of disconnecting, with minimum of interference with other installations. Extend grease fittings to an accessible location.
5. Install equipment giving right-of-way to piping systems installed at a required slope.

G. PAINTING AND FINISHING

1. Refer to Division 9for field painting requirements.
2. Damage and Touch Up: Repair marred and damaged factory-painted finishes with materials and procedures to match original factory finish.

H. FABRICATION AND ERECTION OF METAL EQUIPMENT SUPPORTS AND ANCHORAGE

1. Cut, fit, and place miscellaneous metal supports accurately in location, alignment, and elevation to support and anchor mechanical equipment.
2. Field Welding: Comply with AWS D1.1 "Structural Welding Code – Steel."

I. CUTTING AND PATCHING

1. Cut, channel, chase, and drill floors, walls, partitions, ceilings, and other surfaces necessary for mechanical installations. Perform cutting by skilled mechanics of the trades involved.
2. Repair cut surfaces to match adjacent surfaces.

J. GROUTING

1. Install nonmetallic nonshrink grout for mechanical equipment base bearing surfaces, pump and other equipment base plates, and anchors. Mix grout according to manufacturer's printed instructions.
2. Clean surfaces that will come into contact with grout.
3. Provide forms for placement of grout, as required.
   a. Avoid air entrapment when placing grout.
   b. Place grout to completely fill equipment bases.
4. Place grout on concrete bases to provide a smooth bearing surface for equipment.
5. Place grout around anchors.
6. Cure placed grout according to manufacturer's printed instructions.

K. ARC WELDING PRECAUTIONS

1. Load cell transducers will be installed at various locations in the facility during this contract period. Prior to any arc welding activities performed by either the Contractor or his subcontractor, precautions shall be taken to protect damage to load cell transducers, it shall be assumed that active load cells are in place, not dummy cells. As a minimum, the welder ground lead shall be attached directly tot he vessel or structural member to be welded, preferably adjacent to the weld site. When this is not possible install high-current capacity cables across each load transducer to ground the vessel to the structural member. DO NOT rely on stray rods or piping for grounding, rods generally have high resistance terminations, while piping may contain non-conductive flexible piping couplings. Coordinate welding activities with the Owner.

3.3 MANUFACTURER'S FIELD SERVICES

A. Engage a factory-authorized service representative to perform the following inspections, checks, and supervision of testing:

1. Inspect field-assembled components, equipment installation, and electrical connections for compliance with the manufacturer's installation recommendations and requirements.
2. Set field-adjustable settings to the values recommended by the equipment manufacturer.
3. Test and adjust controls and safety devices. Replace damaged and malfunctioning controls and components.
4. Supervise tests performed by independent testing firms. Witness initial energization and perform or supervise startup services.
5. Prepare written report to record the following:

a. Inspections and checks carried out on site.
b. Test procedures used.
c. Test results that comply with requirements.
d. Test results that do not comply with requirements and corrective action taken to achieve compliance with requirements.

3.4 PROTECTION

A. Protect installed equipment from damage through Substantial Completion.

END OF SECTION

SECTION 22 05 53

IDENTIFICATION FOR PLUMBING PIPING AND EQUIPMENT

PART 1 - GENERAL

1.1 SUMMARY

A. This Section includes Identification For Plumbing Piping and Equipment as shown on the Contract Drawings.

1.2 REFERENCES

A. Comply with the latest revision of the following codes, standards and specifications, except where more stringent requirements have been specified herein:

1. American Society for Testing and Materials (ASTM)
2. American National Standards Institute (ANSI)
   a. ANSI A13.1 - Scheme for the Identification of Piping Systems.

1.3 COORDINATION REQUIREMENTS

A. Coordinate layout and installation of Identification for Plumbing Piping and Equipment with electrical equipment, light fixtures, HVAC equipment and ductwork, and piping.

B. Submit specially prepared Coordination Drawings for this Project, including floor plans and sections, drawn to scale. Include scaled equipment layouts and relationships between equipment and adjacent structural, mechanical, HVAC, and electrical elements in the facility. Show the following:

1. Vertical and horizontal runs, offsets, and transitions.
2. Clearances for access above and to the side.
3. Show dimensions and details, including connections.
4. Support locations, type of support, and weight on each support.
5. Location of adjacent construction elements including light fixtures, HVAC and plumbing equipment, fire sprinklers and piping, signal and control devices, and other equipment.

1.4 SUBMITTALS

A. Submit the following in accordance with the General Provisions.

B. Product Data: “Catalog cuts” and spec sheets marked to specifically indicate the equipment and materials proposed for this project. Indicate selections with arrows, and cross out irrelevant data. For each product specified submit manufacturer’s catalog sheets and specifications showing its compliance with this specification and the referenced standards.

1.5 QUALITY ASSURANCE

A. Identifying labels and markings for piping shall conform to ANSI A13.1 for legend, color, visibility, and size of legend and letters.

1.6 WARRANTY

A. Provide parts and labor warranty in accordance with the General Provisions.

PART 2 - PRODUCTS

2.1 MANUFACTURERS

A. The following manufacturers are named to establish a standard of quality necessary for the Project:
   1. Seton Identification Company, Branford, Connecticut.
   2. Brady Corporation, Milwaukee, Wisconsin.
   3. Or equal.

2.2 GENERAL

A. All components of like size and type shall be the product of the same manufacturer.

2.3 MATERIALS AND CONSTRUCTION

A. Pipe Identification Painting
   1. Type: As identified in Section entitled “Field Painting.”
   2. Color: As scheduled in Paragraph 3.8.

B. Pipe Identification Markers:
   1. Snap-On Type: Pre-coiled acrylic plastic marker with clear polyester coating, incorporating flow arrows, and legend printed in alternate directions.
      a. Piping or insulation under 6 inch O.D.: One piece wrap around type with 3/4 inch adhesive strip on inside edge and 360 degree visibility.
      b. Piping or insulation 6 inch O.D. and larger: Strip type with factory applied grommets, secure with stainless steel spring fasteners.
   2. Stick-On Type: One piece pressure sensitive adhesive backed plastic marker with clear polyester coating, incorporating flow arrows, and legend printed in alternate directions.
      a. Piping or insulation under 8 inch O.D.: Wrap around type with 360 degree visibility.
      b. Piping or insulation 8 inch O.D. and larger: Strip type.
   3. Markers shall be color coded based on pipe contents. Color selection shall be according to chart in Part 3 of this Section.

C. Pipe Banding Tape:

1. 1-1/2 inch width (minimum), pressure sensitive adhesive backed type, of same material as pipe identification mark, and of color to match background color of pipe identification marker.

D. Pipe Service Identification Tags:

1. Type: Brass, 19 B&S gage, with 1/4 inch high pipe service abbreviated lettering over 2-inch high pipe size lettering. Lettering shall be deep stamped and black filled. Tag to have 3/16 inch diameter hole at top for fastening.
2. Size: 2 inch square tag.
3. Fasteners: Brass "S" hook or brass jack chain, size as required for pipe to which tag is attached.

E. Valve Identification Tags:

1. Type: Brass, 19 B&S gage, with 1/4 inch high valve service abbreviated lettering over 2-inch high lettering indicating valve service chart number. Lettering shall be deep stamped and black filled. Tag to have 3/16 inch diameter hole at top for fastening.
2. Size:
   a. Utilities: 1-1/2 inch diameter round tag.
   b. Plumbing: 1-1/2 inch hexagon tag.
3. Fasteners: Brass "S" hook or brass jack chain, size as required for valve stem or handle to which tag is attached.

F. Equipment Identification Letters & Numbers:

1. Type: Stick-on type, made of all purpose polyester, single character letters and numbers, specifically designed for outdoor use.
2. Color: Black letters on bright yellow background.
3. Size: Letters and numbers shall be 1 inch or 3 inches in height, as specified.

2.4 ACCESSORIES

A. Valve Service Identification Chart Frames:

1. Satin finished extruded aluminum frame of size to fit 8-1/2 x 11 inch valve chart and complete with rigid clear plastic glazing.

PART 3 - EXECUTION

3.1 INSTALLATION

A. Install Identification for Plumbing Piping and Equipment in accordance with the manufacturer's installation instructions.

3.2 PAINTING

A. Perform field painting in accordance with the Section 9.

1. General

a. Piping within areas designated below shall be painted with various colors to identify the contents.
b. Paint color shall be in accordance with the Pipe Painting Color Code Schedule found in Paragraph I, below.
c. If the piping is insulated, then the insulation cover shall be painted and not the pipe. EXCEPTION: Do not paint metal insulation jackets, regardless of location.

2. Areas for Pipe Identification Painting:
   a. Piping within the following spaces or rooms shall be painted:
   b. Exposed piping in corridors or other finished spaces which does not have a metal insulation jacket.
3. Application of Paint:
   a. Prepare and paint designated piping and/or insulation in accordance with Section 9.
   b. Coverage of designated piping or insulation shall be complete and free of streaking of defects.
4. Cleaning:
   a. Clean adjacent surfaces of paint spatters and drips resulting from the Work of this Section.

3.3 IDENTIFICATION

A. Piping General:

1. Piping shall be identified as to content and direction of flow by use of pipe identification markers or tags.
2. Identify all piping, bare or insulated, whose contents match those listed in the Pipe Identification Schedule (Paragraph I, below), with the following exceptions:
   a. Piping in furred spaces or above plastered ceilings, except at access panels where valves and piping shall be identified as specified for exposed piping.
   b. Piping in finished spaces such as offices, toilet rooms, locker rooms, etc.
3. Marker legend size, field color, and length of field shall be in accordance with ANSI A13.1.
4. Legend wording shall be developed by the Contractor and submitted for review (see Section 1.4,C). Whenever possible, standard terminology should be used. Identification by the combination of two or more standard labels (at each identification point) is acceptable.

B. Use of Markers or Tags:

1. Pipe or insulation with an outside diameter (O.D.) of 3/4 inch and less shall be identified by the use of Pipe Service Identification Tags.
2. Pipe or insulation with an O.D. larger than 3/4 inch shall be identified by the use of Pipe Identification Markers.
3. Either snap-on or stick-on type markers may be used; except that stick-on markers shall not be used in the following situations:
   a. Areas where humid, wet, or dripping conditions are found or likely.
   b. Areas where chemical fumes are present or likely.
   c. Outdoor installations.
   d. On lines subject to 50 degree F temperature variations.

C. Location of Markers and Tags:

1. Pipe markers and tags shall be located so as to be readily visible from any reasonable point of observation.
2. Locate identification at all valves, branch or riser take-offs, and both sides of pipe passage through walls, floors, and ceilings.
3. On continuous pipe runs locate identification at 20 foot intervals, but not less than one marker or tag on any length of 10 feet or greater.

D. Preparation:

1. Insure that any painting is complete and the paint has thoroughly dried before applying identification.
2. Prepare surface in accordance with the manufacturer's instructions for the type of identification used and the surface to which it is applied.

E. Installation:

1. Install markers and tags in accordance with the manufacturer's instructions.
2. Secure both ends of stick-on type markers with 360 degree application of pipe banding tape. Tape shall have one inch lap on pipe or insulation.

F. Pipe Identification Schedule: Identify the following types of piping with markers and/or tags.

Pipe Service	Label Abbreviation	Background Color	Letter Color
Domestic Hot Water	DHW	Yellow	Black
Domestic Cold Water	DCW	Green	White
Tempered Water (Eye Wash Shower Supply)	TW	Green	White
Sanitary Drain	SAN	Blue	White
Sanitary Vent	V	Blue	White

G. Valve Identification General:

Valves specified below shall be designated by distinguishing numbers and/or letters.
Where applicable, valve designation shall match (as closely as possible) the designation found on the Contract Drawings.

H. Installation:

1. Fasten tags to valve stems or handles using brass "S" hooks or jack chain.
2. Fasten tags in a manner and location that will permit easy reading, but will not interfere with the operation of the valve.

I. Valve Service Identification Chart:

1. Provide two framed valve charts for each piping system to have valve identification tags.
2. Charts shall be typed, in the reviewed format (see 1.4D), on 8-1/2 x 11 inch heavy white bond paper and framed in an aluminum frame. Hang framed charts at location(s) directed.

J. Equipment Identification General:

1. Identify mechanical equipment, bare or insulated, in the following locations, by use of stick-on letters and numbers:
   a. Process Areas.

K. Location and Content of Identification:

1. Equipment shall be identified with a minimum of two sets of lettering. Center identification lettering, vertically and horizontally, on opposite vertical sides of the equipment.
2. Vertical sides selected shall have the longest dimension (i.e., label sides of equipment and not the ends), unless view is obstructed to those sides. If view is obstructed to sides of equipment, locate identification lettering on the two most visible vertical sides and/or ends.
3. Equipment identification numbers and letters shall match the designation found in the equipment schedules on the Contract Drawings.

L. Size of Lettering:

1. Use the largest lettering size (3 inch or 1 inch height) that will easily fit the available surface space.
2. Use only one lettering height on any given piece of equipment (i.e., do not mix lettering sizes).

M. Installation:

1. Prepare surface to which lettering is applied and install lettering in accordance with the manufacturer's in-structions.
2. Apply lettering in a straight line along the axis of the equipment. Lettering edges should touch, but not over-lap.

3.4 PROTECTION

A. Protect installed equipment from damage through Substantial Completion.

END OF SECTION

SECTION 22 07 19

PLUMBING INSULATION

PART 1 - GENERAL

1.1 SUMMARY

A. Section includes insulating the following plumbing piping services:
   1. Domestic cold-water piping.
   2. Domestic hot-water piping.
   3. Supplies and drains for handicap-accessible lavatories and sinks.

B. Insulation Materials:
   1. Mineral Fiber (MF).
   2. Flexible Elastomeric (FE).

1.2 REFERENCES

A. Comply with the latest revision of the following codes, standards and specifications, except where more stringent requirements have been specified herein:
   1. American Society for Testing and Materials (ASTM)
   2. Military Specifications (MIL), as applicably noted.
   3. Energy Conservation Construction Code of New York State.

1.3 SUBMITTALS

A. Submit the following in accordance with the General Provisions.

B. Product Data: “Catalog cuts” and spec sheets marked to specifically indicate the equipment and materials proposed for this project. Indicate selections with arrows, and cross out irrelevant data.

1.4 QUALITY ASSURANCE

A. Qualifications
   1. Fire-Test-Response Characteristics: As determined by testing materials identical to those specified in this Section according to ASTM E 84, by a testing and inspecting agency acceptable to authorities having jurisdiction. Factory label insulation and jacket materials and sealer and cement material containers with appropriate markings of applicable testing and inspecting agency.
      a. Insulation Installed Indoors: Flame-spread rating of 25 or less, and smoke-developed rating of 50 or less.
      b. Insulation Installed Outdoors: Flame-spread rating of 75 or less, and smoke-developed rating of 150 or less.

1.5 DELIVERY, STORAGE AND HANDLING

A. Packaging: Ship insulation materials in containers marked by manufacturer with appropriate ASTM specification designation, type and grade, and maximum use temperature.

B. Maintain ambient conditions required by manufacturers of tapes, adhesives, mastics, cements, and insulation materials.

PART 2 - PRODUCTS

2.1 MINERAL FIBER INSULATION

A. Manufacturers:
1. CertainTeed Manson.
2. Johns Manville Corp.
3. Knauf Insulation
4. Owens-Corning Fiberglass Corp.
5. Or equal.

B. Description:
1. Fibrous Glass (Mineral-fiber) Insulation: Glass fibers bonded with a thermosetting resin complying with the following:
   a. Preformed Pipe Insulation: Comply with ASTM C 547, Type 1, with factory-applied, all-purpose, vapor-retarder jacket with or without self-sealing lap as applicable for application.
   b. Fire-Resistant Adhesive: Comply with MIL-A-3316C in the following classes and grades:
      1) Class 1, Grade A for bonding glass cloth and tape to unfaced glass-fiber insulation, for sealing edges of glass-fiber insulation, and for bonding lagging cloth to unfaced glass-fiber insulation.
      2) Class 2, Grade A for bonding glass-fiber insulation to metal surfaces.
   c. Vapor-Retarder Mastics: Fire- and water-resistant, vapor-retarder mastic for indoor applications. Comply with MIL-C-19565C, Type II.
   d. Mineral-Fiber Insulating Cements: Comply with ASTM C 195.
   e. Expanded or Exfoliated Vermiculite Insulating Cements: Comply with ASTM C 196.
   f. Mineral-Fiber, Hydraulic-Setting Insulating and Finishing Cement: Comply with ASTM C 449/C 449M.

2.2 FLEXIBLE ELASTOMERIC INSULATION

A. Manufacturers:
1. Armstrong World Industries, Inc.
2. Aeroflex USA Inc., Aerocel.
3. Rubatex Corp.
4. Or equal.

B. Description:

1. Flexible Elastomeric: Closed cell, sponge or expanded-rubber materials. Comply with ASTM C 534, Type I for tubular materials and Type II for sheet materials
   a. Flexible Elastomeric Adhesive: Comply with MIL-A-24179a, Type II, Class I.

2.3 FIELD-APPLIED JACKETS

A. Manufacturers:

1. Johns Manville; Zeston.
2. P.I.C. Plastics, Inc.; FG Series.
3. Proto Corporation; LoSmoke.
4. Speedline Corporation; SmokeSafe.
5. Or equal.

B. Description:

1. Field-applied jackets shall comply with ASTM C921, Type I, unless otherwise indicated.
2. Heavy PVC Fitting Covers: Factory-fabricated fitting covers manufactured from 30-mil-thick, high-impact, ultraviolet-resistant PVC. Application; as noted for mechanical rooms and outdoor use.
   a. Shapes: 45- and 90-degree, short- and long-radius elbows, tees, valves, flanges, reducers, end caps, soil-pipe hubs, traps, mechanical joints, and P-trap and supply covers for lavatories for the disabled.
   b. Adhesive: As recommended by insulation and/or material manufacturer for temperature application.
3. Standard PVC Fitting Covers: Factory-fabricated fitting covers manufactured from 20-mil-thick, high-impact, ultraviolet-resistant PVC for indoor use only.
   a. Shapes: 45- and 90-degree, short- and long-radius elbows, tees, valves, flanges, reducers, end caps, soil-pipe hubs, traps, mechanical joints, and P-trap and supply covers for lavatories for the disabled.
   b. Adhesive: As recommended by insulation and/or material manufacturer for temperature application.

2.4 ACCESSORIES

A. Description:

1. Glass Cloth and Tape: Comply with MIL-C-20079H, Type I for cloth and Type II for tape. Woven glass-fiber fabrics, plain weave, pre-sized a minimum of 8 oz/yd2.
   a. Tape Width: 4 inches.
2. Bands: 3/4 inch wide, in one of the following materials compatible with jacket:
   a. Stainless Steel: ASTM A 666, Type 304; 0.020 inch thick.
   b. Galvanized Steel: 0.005 inch thick.
   c. Aluminum: 0.007 inch thick.
   d. Brass: 0.010 inch thick.
   e. Nickel-Copper Alloy: 0.005 inch thick.
3. Wire: 0.080-inch, nickel-copper alloy; 0.062-inch, soft-annealed, stainless steel; or 0.062-inch, soft-annealed, galvanized steel.

PART 3 - EXECUTION

3.1 EXAMINATION

A. Examine areas and conditions for compliance with manufacturer's installation recommendations and requirements.

B. Proceed with installation only after unsatisfactory conditions have been corrected.

3.2 PREPARATION

A. Surface Preparation: Clean and dry surfaces to receive insulation. Remove materials that will adversely affect insulation application.

3.3 INSTALLATION GENERAL

A. Install materials as shown on the Contract Drawings and in accordance with the manufacturer's installation instructions.

B. Apply insulation materials, accessories, and finishes according to the manufacturer's written instructions; with smooth, straight, and even surfaces; and free of voids throughout the length of equipment, fittings and piping, including fittings, valves and specialties.

C. Refer to schedules at the end of this Section for materials, jackets, and thicknesses required for each piping system.

D. Use accessories compatible with insulation materials and suitable for the service. Use accessories that do not corrode, soften, or otherwise attack insulation or jacket in either wet or dry state.

E. Apply multiple layers of insulation with longitudinal and end seams staggered.

F. Seal joints and seams with vapor-retarder mastic on insulation indicated to receive a vapor retarder.

G. Keep insulation materials dry during storage, application and finishing.

H. Apply pipe insulation with tight longitudinal seams and end joints. Bond seams and joints with adhesive recommended by the insulation material manufacturer.

I. Apply insulation with the least number of joints practical.

J. Apply insulation over fittings and specialties, with continuous thermal and vapor-retarder integrity, unless otherwise indicated.

K. Apply insulation over fittings, valves, and specialties, with continuous thermal and vapor-retarder integrity, unless otherwise indicated. Refer to special instructions for applying insulation over fittings, valves, and specialties.

L. Hangers and Anchors: Where vapor retarder is indicated, seal penetrations in insulation at hangers, supports, anchors, and other projections with vapor-retarder mastic. Apply insulation continuously through hangers and around anchor attachments.

1. Apply insulation continuously through hangers and around anchor attachments.
2. For insulation application where vapor retarders are indicated, extend insulation on anchor legs at least 12 inches from point of attachment to pipe and taper insulation ends. Seal tapered ends with a compound recommended by the insulation material manufacturer to maintain vapor retarder.
3. Install insert materials and apply insulation to tightly join the insert. Seal insulation to insulation inserts with adhesive or sealing compound recommended by the insulation material manufacturer.
4. Cover inserts with jacket material matching adjacent pipe insulation. Install shields over jacket, arranged to protect the jacket from tear or puncture by the hanger, support, and shield.

M. Insulation Terminations: For insulation application where vapor retarders are indicated, seal ends with a compound recommended by the insulation material manufacturer to maintain vapor retarder.

N. Apply insulation with integral jackets as follows:

1. Pull jacket tight and smooth.
2. Joints and Seams: Cover with tape and vapor retarder as recommended by insulation material manufacturer to maintain vapor seal.
3. Vapor-Retarder Mastics: Where vapor retarders are indicated, apply mastic on seams and joints and at ends adjacent to duct flanges and fittings.
4. Circumferential Joints: Cover with 3-inch-wide strips, of same material as insulation jacket. Secure strips with adhesive and outward clinching staples along both edges of strip and spaced 4 inches o.c.
5. Longitudinal Seams: Overlap jacket seams at least 1-1/2 inches. Apply insulation with longitudinal seams at bottom of pipe. Clean and dry surface to receive self-sealing lap. Staple laps with outward clinching staples along edge at 4 inches o.c.
   a. Exception: Do not staple longitudinal laps on insulation having a vapor retarder.

O. Cut insulation according to manufacturer’s written instructions to prevent compressing insulation to less than 75 percent of its nominal thickness.

P. Roof Penetrations: Apply insulation for interior applications to a point even with top of roof flashing.

1. Seal penetrations with vapor-retarder mastic.
2. Apply insulation for exterior applications tightly joined to interior insulation ends.
3. Seal insulation to roof flashing with vapor-retarder mastic.

4. Extend metal jacket of exterior insulation outside roof flashing at least 2 inches below top of roof flashing.

Q. Interior Wall and Partition Penetrations: Apply insulation continuously through walls and partitions, except fire-rated walls and partitions.

R. Fire-Rated Wall and Partition Penetrations: Terminate insulation at fire/smoke damper sleeves for fire-rated wall and partition penetrations.

S. Floor Penetrations: Terminate insulation at underside of floor assembly and at floor support at top of floor.

1. For insulation indicated to have vapor retarders, taper termination and seal insulation ends with vapor-retarder mastic.

3.4 INSTALLATION OF MINERAL-FIBER INSULATION

A. Apply insulation to straight pipes and tubes as follows:

1. Secure each layer of preformed pipe insulation to pipe with wire, tape, or bands without deforming insulation materials.
2. Where vapor retarders are indicated, seal longitudinal seams and end joints with vapor-retarder mastic. Apply vapor retarder to ends of insulation at intervals of 15 to 20 feet to form a vapor retarder between pipe insulation segments.
3. For insulation with factory-applied jackets with vapor retarders, do not staple longitudinal tabs but secure tabs with additional adhesive as recommended by the insulation material manufacturer and seal with vapor-retarder mastic.
4. For insulation with factory-applied jackets, secure laps with outward clinched staples at 6 inches o.c.

B. Apply insulation to flanges as follows:

1. Apply preformed pipe insulation to outer diameter of pipe flange.
2. Make width of insulation segment the same as overall width of the flange and bolts, plus twice the thickness of the pipe insulation.
3. Fill voids between inner circumference of flange insulation and outer circumference of adjacent straight pipe segments with mineral-fiber blanket insulation.

C. Apply insulation to fittings and elbows as follows:

1. Apply pre-molded insulation sections of the same material as straight segments of pipe insulation when available. Secure according to manufacturer's written instructions.
2. When pre-molded insulation elbows and fittings are not available, apply mitered sections of pipe insulation, or glass-fiber blanket insulation, to a thickness equal to adjoining pipe insulation. Secure insulation materials with wire, tape, or bands.
3. Cover indoor fittings with standard PVC fitting covers.
4. Cover mechanical room and outdoor fittings with heavy PVC fitting covers. Overlap PVC covers on pipe insulation jackets at least 1 inch at each end. Secure

fitting covers with manufacturer's attachments and accessories. Seal seams with tape and vapor-retarder mastic.

D. Apply insulation to valves and specialties as follows:

1. Apply pre-molded insulation sections of the same material as straight segments of pipe insulation when available. Secure according to manufacturer's written instructions.
2. When pre-molded insulation sections are not available, apply glass-fiber blanket insulation to valve body. Arrange insulation to permit access to packing and to allow valve operation without disturbing insulation. For check valves, arrange insulation for access to strainer basket without disturbing insulation.
3. Apply insulation to flanges as specified for flange insulation application.
4. Indoors: Use preformed standard PVC fitting covers for valve sizes where available. Secure fitting covers with manufacturer's attachments and accessories. Seal seams with tape and vapor-retarder mastic.
5. Outdoors: Use preformed heavy PVC fitting covers for valve sizes where available. Secure fitting covers with manufacturer's attachments and accessories. Seal seams with tape and vapor-retarder mastic.

3.5 INSTALLATION OF FLEXIBLE ELASTOMERIC INSULATION

A. Apply insulation to straight pipes and tubes as follows:

1. Follow manufacturer's written instructions for applying insulation.
2. Seal longitudinal seams and end joints with manufacturer's recommended adhesive. Cement to avoid openings in insulation that will allow passage of air to the pipe surface.

B. Apply insulation to flanges as follows:

1. Apply pipe insulation to outer diameter of pipe flange.
2. Make width of insulation segment the same as overall width of the flange and bolts, plus twice the thickness of the pipe insulation.
3. Fill voids between inner circumference of flange insulation and outer circumference of adjacent straight pipe segments with cut sections of sheet insulation of the same thickness as pipe insulation.
4. Secure insulation to flanges and seal seams with manufacturer's recommended adhesive. Cement to avoid openings in insulation that will allow passage of air to the pipe surface.

C. Apply insulation to fittings and elbows as follows:

1. Apply mitered sections of pipe insulation.
2. Secure insulation materials and seal seams with manufacturer's recommended adhesive. Cement to avoid openings in insulation that will allow passage of air to the pipe surface.

D. Apply insulation to valves and specialties as follows:

1. Apply preformed valve covers manufactured of the same material as pipe insulation and attached according to the manufacturer's written instructions.
2. Apply cut segments of pipe and sheet insulation to valve body. Arrange insulation to permit access to packing and to allow valve operation without

disturbing insulation. For check valves, fabricate removable sections of insulation arranged to allow access to strainer basket.

3. Apply insulation to flanges as specified for flange insulation application.
4. Secure insulation to valves and specialties and seal seams with manufacturer's recommended adhesive. Cement to avoid openings in insulation that will allow passage of air to the pipe surface.

3.6 INSTALLATION OF FIELD-APPLIED JACKET

A. Apply PVC jacket where indicated, with 1-inch overlap at longitudinal seams and end joints. Seal with manufacturer's recommended adhesive.

B. Apply metal jacket where indicated, with 2-inch overlap at longitudinal seams and end joints. Overlap longitudinal seams arranged to shed water. Seal end joints with weatherproof sealant recommended by insulation manufacturer. Secure jacket with stainless-steel bands 12 inches o.c. and at end joints.

3.7 FIELD QUALITY CONTROL

A. Inspection: Engage a qualified inspection agency to perform the following field quality-control inspections, after installing insulation materials, jackets, and finishes, to determine compliance with requirements:

B. Insulation applications will be considered defective if sample inspection reveals noncompliance with requirements. Remove defective Work and replace with new materials according to these Specifications.

C. Reinstall insulation and covers on piping uncovered for inspection according to these Specifications.

3.8 IDENTIFICATION

A. Identify piping and valves as specified in Identification for Plumbing Piping and Equipment Section.

3.9 SCHEDULE

A. Refer to insulation application Table 1 for required insulation thicknesses.

TABLE 1 – PIPE INSULATION THICKNESS

Pipe Service	Insulation Thickness	
	MF	FE
Domestic cold water – All sizes	½”	½”
Domestic Hot water – up to & including 1 ½” dia.	1”	1”
Domestic Hot water – 2”dia. & larger	1 ½”	1 ½”

END OF SECTION

SECTION 22 08 00

CLEANING AND TESTING

PART 1 - GENERAL

1.1 SUMMARY

A. This Section includes Cleaning and Testing as shown on the Contract Drawings.

1.2 REFERENCES

A. Comply with the latest revision of the following codes, standards and specifications, except where more stringent requirements have been specified herein:

a. Plumbing Code of New York State

1.3 SUBMITTALS

A. Submit the following in accordance with the General Provisions.

B. Product Data: “Catalog cuts” and spec sheets marked to specifically indicate the equipment and materials proposed for this project. Indicate selections with arrows, and cross out irrelevant data.

1.4 QUALITY ASSURANCE

A. Regulatory Requirements

1. Perform factory testing of factory fabricated equipment in complete accordance with the agencies having jurisdiction
2. Perform field testing of piping systems in complete accordance with the local utilities and other agencies having jurisdiction and as specified.

1.5 DELIVERY, STORAGE AND HANDLING

A. During test Work, protect controls, gages, and accessories which are not designed to withstand test pressures. Do not utilize permanently installed gages for field testing of systems.

1.6 WARRANTY

A. Provide parts and labor warranty in accordance with the General Provisions.

PART 2 - PRODUCTS

2.1 MATERIALS

A. Test Equipment and Instruments: Type and kind as required for the particular system under test.

B. Test Media (air, vacuum, water): As specified for the particular piping or system under test.

C. Cleaning Agent (water): As specified for the particular piping, apparatus or system being cleaned.

PART 3 - EXECUTION

3.1 PREPARATION

A. Thoroughly clean pipe and tubing prior to installation. During installation, prevent foreign matter from entering systems. Prevent if possible and remove stoppages or obstructions from piping and systems.

3.2 TESTING

A. Piping shall be tight under test and shall not show loss in pressure or visible leaks, during test operations or after the minimum duration of time as specified. Remove piping which is not tight under test; remake joints and repeat test until no leaks occur.

B. Water Systems:

1. Domestic water (potable cold, domestic hot, and tempered water).
   a. Before fixtures, faucets, trim and accessories are connected, perform hydrostatic test at 125 psig minimum for 4 hours.
   b. After fixtures, faucets, trim and accessories are connected, perform hydrostatic retest at 75 psig for 4 hours

C. Drainage, Waste and Vent Piping: Perform tests before fixtures are installed. Test by filling the entire system with water, and allowing to stand for 3 hours, with noticeable loss of water. Test joints under a minimum head of 10 feet of water except the uppermost section. Test the uppermost section to overflowing.

D. Relief valves: increase pressure in equipment or apparatus to relief valve setting, to test opening of valves at required relief pressures.

3.3 CLEANING

A. `Disinfection of Potable water systems

1. Disinfect potable water pipe and equipment installed in the Work of this Contract.

a. Completely fill the piping, including the water storage equipment if installed, with a water solution containing 50 mg/L available chlorine, and allow to stand for 24 hours. Operate all valves during this period to assure their proper disinfection.
b. After the retention period, discharge the solution to an approved waste and flush the system thoroughly with water until substantially all traces of chlorine are removed. Drain and flush water storage equipment if installed.

2. Connect plumbing fixtures and equipment and place the system into service. Prevent recontamination of the piping during this phase of the Work.

END OF SECTION

SECTION 22 11 16

DOMESTIC WATER PIPING

PART 1 - GENERAL

1.1 SUMMARY

A. This Section includes Domestic Water Piping systems as shown on the Contract Drawings.

1.2 REFERENCES

A. Materials and installation shall be in accordance with the latest revisions of the following codes, standards and specifications, except where more stringent requirements have been specified herein:

1. American National Standards Institute (ANSI)/American Society of Mechanical Engineers (ASME)
   a. ANSI/ASME B16.3 – Malleable Iron Threaded Fittings Class 150 NS 300.
   b. ANSI/ASME B16.22 – Wrought Copper and Copper Alloy Solder–Joint Pressure Fittings.
   c. ANSI/ASME B16.29 – Wrought Copper and Wrought Copper Alloy Solder Joint Drainage Fittings – DWV.
2. American National Standards Institute (ANSI)/American Society for Testing and Materials (ASTM)
   a. ANSI/ASTM B32 – Solder Metal.
   b. ANSI/ASTM F477 – Standard Specification for Elastomeric Seals (Gaskets) for Joining Plastic Pipe.
3. American Society For Testing and Materials (ASTM)
   a. ASTM A53 – Pipe, Steel, Black and Hot-Dipped Zinc Coated, Welded and Seamless.
   b. ASTM B88 – Seamless Copper Water Tube.
   c. ASTM D2846 – Specification for Chlorinated Poly (Vinyl Chloride) (CPVC) Plastic and Cold Water Distribution Systems.
   d. ASTM F438 – Specification for Socket-type Chlorinated Poly (Vinyl Chloride) (CPVC) Plastic Pipe Fittings, Schedule 40.
   e. ASTM F493 – Specification for Solvent Cements for Chlorinated Poly (Vinyl Chloride) (CPVC) Plastic Pipe and Fittings.
   f. ASTM D2855 – Standard Practice for Making Solvent-Cemented Joints with Poly (Vinyl Chloride) (PVC) Pipe and Fittings.
   g. ASTM D1785 – Standard Specification for Poly (Vinyl Chloride) (PVC) Plastic Pipe, Schedules 40, 80 and 120.
   h. m. ASTM D2466 – Standard Specification for Poly (Vinyl Chloride) (PVC) Plastic Pipe Fittings, Schedule 40.
4. National Sanitation Foundation
   a. NSF 61 --– Drinking Water System Components: Health Effects.
5. Plumbing Code for State of New York

1.3 COORDINATION REQUIREMENTS

A. Coordinate layout and installation of Domestic Water Piping with electrical equipment, light fixtures, HVAC equipment and ductwork, and piping.

1.4 SUBMITTALS

A. Submit the following in accordance with the General Provisions.

B. Product Data: "Catalog cuts" and spec sheets marked to specifically indicate the equipment and materials proposed for this project. Indicate selections with arrows, and cross out irrelevant data.

1.5 WARRANTY

A. Provide parts and labor warranty in accordance with the General Provisions.

PART 2 - PRODUCTS

2.1 POTABLE COLD WATER PIPING, ABOVE GRADE

A. Manufacturers:
1. Cerro Flow Products Inc.
2. NIBCO INC.
3. Wheatland Tube Company.
4. Or equal.

B. Description:
1. 2-inch and below Copper Tubing: ASTM B88, Type L. Fittings: ANSI/ASME B16.22, wrought copper. Joints: ANSI/ASTM B32, solder, Grade 95TA.
2. B. 2½-inch and above Seamless Carbon Steel: ASTM A53, schedule 40, Grade A. Fittings:150# malleable iron, threaded or flanged.

2.2 POTABLE COLD WATER PIPING, BELOW GRADE

A. Manufacturers:
1. Cerro Flow Products Inc.
2. NIBCO INC.
3. Wheatland Tube Company.
4. Or equal.

B. Description:
1. 3-inch and below Copper Tubing: ASTM B88, Type K. Fittings: ANSI/ASME B16.22, wrought copper. Joints: ANSI/ASTM B32, solder, Grade 95TA.

2.3 POTABLE HOT WATER

A. Manufacturers: Cerro Flow Products Inc.

1. NIBCO INC.
2. Wheatland Tube Company.
3. Or equal.

B. Description:

1. 2-inch and below Copper Tubing: ASTM B88, Type L. Fittings: ANSI/ASME B16.22, wrought copper. Joints: ANSI/ASTM B32, solder, Grade 95TA.

PART 3 - EXECUTION

3.1 EXAMINATION

A. Examine areas and conditions for compliance with manufacturer's installation recommendations and requirements.

B. Examine walls, floors, roofs, and concrete bases for suitable conditions for installation, for example, all overhead work of other trades is complete.

C. Proceed with installation only after unsatisfactory conditions have been corrected.

3.2 INSTALLATION

A. Install piping and accessories in accordance with the configuration shown on Contract Drawings.

B. All areas shall be interpreted as industrial and all piping shall be installed exposed unless otherwise shown or specified.

C. Areas with a finished ceiling indicated on the Contract Drawings "Room Finish Schedule" shall have all piping concealed unless otherwise shown or specified.

D. Sleeves shall be provided where piping passes through floors and walls.

1. Sleeves shall be caulked watertight or gastight as required.
2. Where water tightness or gas tightness is not required and the pipe is insulated, the sleeve shall be sized to permit full insulation thickness of pipe to be installed through the sleeve.

E. Leakage tests shall be as specified.

F. No fixture or equipment shall be connected directly to the potable water system in such a manner that a cross-connection exists and backflow of contaminated water into the potable water system could occur.

G. All piping, except where noted, shall be kept as high as possible.

H. All connections between ferrous and non-ferrous piping and equipment shall be made with dielectric unions.

I. Copper piping installed in concrete shall be coated with bitumastic paint.

J. All water piping shall be run true and plumb, free of traps, and installed with adequate clearance from mechanical work.

K. All water piping shall pitch to drain at a slope of ¼ inch per 10 feet unless otherwise noted. Manual air vents shall be installed at all high points and drain valves shall be installed at all low points.

L. Piping shall not be installed across or in front of doors or windows.

M. All piping shall be routed parallel to building column lines.

N. All hot and cold water lines above grade shall be insulated. All exposed insulated piping within five (5) feet of finished floor shall have a metal jacket.

O. All potable water piping shall be disinfected in accordance with the Plumbing Code of New York State requirements, Section 610.

P. Install water hammer arresters complete with accessible isolation valve.

Q. Install low-point drain valves with threaded nipple and cap.

1. Correct malfunctioning units on-site, where possible, and retest to demonstrate compliance; otherwise, replace with new units and retest.

3.3 IDENTIFICATION

A. Identify piping as specified in accordance with "Identification for Plumbing Piping and Equipment".

END OF SECTION

SECTION 22 11 19

DOMESTIC WATER PIPING SPECIALTIES

PART 1 - GENERAL

1.1 SUMMARY

A. This Section includes Plumbing Specialties including, Backflow preventers, water hammer arresters, hose bibbs, wall hydrants, trap primer valves and distribution units as shown on the Contract Drawings.

1.2 REFERENCES

A. Materials and installation shall be in accordance with the latest revisions of the following codes, standards and specifications, except where more stringent requirements have been specified herein:

1. American National Standards Institute (ANSI)/American Society of Sanitary Engineering (ASSE)
   a. ANSI/ASSE 1011 - Hose Connection Vacuum Breakers
   b. ANSI/ASSE 1019 - Wall Hydrants, Frost Proof Automatic Draining Anti-Backflow Types.
2. American National Standards Institute (ANSI)
   a. ANSI A112.21.1 - Floor Drains.
   b. ANSI A112.2.1.2 - Roof Drains.
   c. ANSI A112.26.1 - Water Hammer Arresters.
3. American Society for Testing and Materials (ASTM)
   a. ASTM A 48 – Specifications for Gray Iron Castings.
   b. ASTM A126 – Specifications for Gray Iron Castings for Valves, Flanges, and Pipe Fittings.
4. National Sanitation Foundation (NSF)
   a. NSF 61 – Drinking Water System Components – Health Effects.
5. American Society of Mechanical Engineers (ASME)
   a. ASME B120.1 – Pipe Threads, General Purpose (inch).
6. Plumbing and Drainage Institute (PDI)
7. Plumbing Code of New York State

1.3 SUBMITTALS

A. Submit the following in accordance with the General Provisions.

B. Product Data: “Catalog cuts” and spec sheets marked to specifically indicate the equipment and materials proposed for this project. Indicate selections with arrows, and cross out irrelevant data.

1. In addition to those submittals identified in the General Provisions, the following items shall also be submitted.
2. Submit minimum inlet pressure requirements and pressure drop data for backflow preventers.

1.4 WARRANTY

A. Provide parts and labor warranty in accordance with the General Provisions.

PART 2 - PRODUCTS

2.1 BACKFLOW PREVENTERS

A. Manufacturers:
1. Hersey Products Inc.
2. Watts Regulator Company.
3. Febco Sales Inc.
4. Or equal.

B. Description:
1. Reduced pressure zone backflow preventers shall have a relief valve located between two independently operating check valves. Backflow preventers shall be designed for horizontal flow installation and sized as indicated on Contract Drawings.

C. Performance/Design Criteria:
1. 3/4-inch through 2-inch backflow preventers
a. Model FRP II as manufactured by Hersey Products Inc.
b. Model 909 as manufactured by Watts Regulator Company.
c. Model 825Y as manufactured by Febco Sales Inc.

2. 2-1/2-inch through 6-inch backflow preventers
a. Model 6CM as manufactured by Hersey Products Inc.
b. Model 909 as manufactured by Watts Regulator Company.
c. Model 860 as manufactured by Febco Sales Inc.

2.2 WATER HAMMER ARRESTER

A. Manufacturers:
1. Precision Plumbing Products, Inc.
2. J.R. Smith Manufacturing Company.
3. Zurn Industries, Inc.
4. Or equal.

B. Description:
1. Water hammer arrester models:
a. Hydrotrol
b. Shoktrol.

2.3 HOSE BIBB

A. Manufacturers:
1. Chicago Faucet Company.

2. NIBCO.
3. Acorn.
4. Or equal.

B. Description:

1. Hose bibbs shall have a 3/4-inch flanged female I.P.S. Inlet, 3/4-inch hose thread outlet with lock shield cap, vacuum breaker, and polished chrome plate finish.

2.4 TRAP PRIMER VALVE

A. Manufacturers:

1. Precision Plumbing Products, Inc.
2. J.R. Smith Manufacturing Company.
3. Or equal.

B. Description:

1. Trap Primer Valve shall be provided to supply water to floor drain trap to prevent loss of trap seal.

2.5 TRAP PRIMER DISTRIBUTION UNIT

A. Manufacturers:

1. Precision Plumbing Products, Inc.
2. Or equal.

B. Description:

1. Distribution unit shall have a copper reservoir with brass fittings and clear plastic inspection cover on side of reservoir. Unit shall be provided with mounting brackets.

PART 3 - EXECUTION

3.1 INSTALLATION

A. Install Domestic Water Piping Specialties as shown on the Contract Drawings and in accordance with the manufacturer's installation instructions.

B. Install water hammer arresters complete with accessible isolation valve.

3.2 PROTECTION

A. Protect installed equipment from damage through Substantial Completion.

END OF SECTION

SECTION 22 13 16

SANITARY WASTE AND VENT PIPING

PART 1 - GENERAL

1.1 SUMMARY

A. This Section includes Sanitary Waste and Vent Piping Systems as shown on the Contract Drawings.

1.2 REFERENCES

A. Materials and installation shall be in accordance with the latest revisions of the following codes, standards and specifications, except where more stringent requirements have been specified herein:

1. American National Standards Institute (ANSI)/American Society of Mechanical Engineers (ASME)
   a. ANSI/ASME B16.3 – Malleable Iron Threaded Fittings Class 150 NS 300.
   b. ANSI/ASME B16.22 – Wrought Copper and Copper Alloy Solder–Joint Pressure Fittings.
   c. ANSI/ASME B16.29 – Wrought Copper and Wrought Copper Alloy Solder Joint Drainage Fittings – DWV.
2. American National Standards Institute (ANSI)/American Society for Testing and Materials (ASTM)
   a. ANSI/ASTM B32 – Solder Metal.
   b. ANSI/ASTM F477 – Standard Specification for Elastomeric Seals (Gaskets) for Joining Plastic Pipe.
3. American National Standards Institute (ANSI)/American Water Works Association (AWWA)
   a. ANSI/AWWA C110 – Ductile-Iron and Gray-Iron Fittings 3 in. through 48 in., for Water and Other Liquids.
   b. ANSI/AWWA C111– Rubber-Gasket Joints for Ductile Iron and Gray-Iron Pressure Pipe and Fittings.
   c. ANSI/AWWA C151 – Ductile-Iron Pipe, Centrifugally Cast in Metal Molds or Sand-Lined Molds, for Water or Other Liquids.
4. American Society For Testing and Materials
   a. ASTM A53 – Pipe, Steel, Black and Hot-Dipped Zinc Coated, Welded and Seamless.
   b. ASTM A74 – Cast Iron Soil Pipe and Fittings.
   c. ASTM B306 – Copper Drainage Tube (DWV).
   d. ASTM C564 – Rubber Gaskets for Cast Iron Soil Pipe and Fittings.
   e. ASTM F438 – Specification for Socket-type Chlorinated Poly (Vinyl Chloride) (CPVC) Plastic Pipe Fittings, Schedule 40.
   f. ASTM F493 – Specification for Solvent Cements for Chlorinated Poly (Vinyl Chloride) (CPVC) Plastic Pipe and Fittings.
   g. ASTM D2665 – Specification for Poly (Vinyl Chloride) (PVC) Plastic Drain, Waste, and Vent Pipe and Fittings.

h. ASTM D3311 – Specification for Drain, Water and Vent (DWV) Plastic Fittings Patterns.
i. ASTM D2855 – Standard Practice for Making Solvent-Cemented Joints with Poly (Vinyl Chloride) (PVC) Pipe and Fittings.
j. ASTM D1785 – Standard Specification for Poly (Vinyl Chloride) (PVC) Plastic Pipe, Schedules 40, 80 and 120.
k. ASTM D2466 – Standard Specification for Poly (Vinyl Chloride) (PVC) Plastic Pipe Fittings, Schedule 40.
l. ASTM D3034 – Standard Specification for Type PSM Poly (Vinyl Chloride) (PVC) Sewer Pipe and Fittings.

5. Cast Iron Soil Pipe Institute (CISPI)
   a. CISPI 301 - Cast Iron Soil Pipe and Fittings for Hubless Cast Iron Sanitary Systems.
   b. Plumbing Code of New York State

1.3 SUBMITTALS

A. Submit scaled layout drawings of the piping system. Coordinate layout drawings with architectural, structural, electrical, plumbing and mechanical work. Drawings shall specify pipe and joint type, size, elevation and slope.

B. Product Data: “Catalog cuts” and spec sheets marked to specifically indicate the equipment and materials proposed for this project. Indicate selections with arrows, and cross out irrelevant data.

1.4 WARRANTY

A. Provide parts and labor warranty in accordance with the General Provisions.

PART 2 - PRODUCTS

2.1 SANITARY DRAINAGE PIPING, BELOW GRADE

A. Description:
   1. Cast Iron Soil Pipe: ASTM A74 service weight. Fittings: Cast iron. Joints: hub-and-spigot, CISPI HSN compression type with ASTM C564 neoprene gaskets.
   2. Polyvinyl Chloride (PVC) Plastic Pipe (Type DWV): ASTM D2665. Fittings: PVC, Type DWV – ASTM D3311. Joints: Solvent cement in accordance with ASTM D2855.

2.2 SANITARY VENT PIPING, BELOW GRADE

A. Description:
   1. Cast Iron Soil Pipe: ASTM A74 service weight. Fittings: Cast iron. Joints: Hub-and-spigot, CISPI HSN compression type with ASTM C564 neoprene gaskets.
   2. Polyvinyl Chloride (PVC) Plastic Pipe (Type DWV): ASTM D2665. Fittings: PVC, Type DWV – ASTM D3311. Joints: Solvent cement in accordance with ASTM D2855.

2.3 SANITARY DRAINAGE PIPING, ABOVE GRADE

A. Description:

1. Cast Iron Soil Pipe: CISPI 301, hubless, service weight. Fittings: Cast iron. Joints: Neoprene gaskets and stainless steel clamp-and-shield assemblies.
2. Copper Pipe: ASTM B306, DWV. Fittings: ANSI/ASME B16.3, cast bronze, or ANSI/ASME B16.29, wrought copper. Joints: ANSI/ASTM B32, solder, Grade 50B.
3. Polyvinyl Chloride (PVC) Plastic Pipe (Type DWV): ASTM D2665. Fittings: PVC, Type DWV – ASTM D3311. Joints: Solvent cement in accordance with ASTM D2855.

2.4 SANITARY VENT PIPING, ABOVE GRADE

A. Description:

1. Cast Iron Soil Pipe: CISPI 301, hubless, service weight. Fittings: Cast iron. Joints: Neoprene gaskets and stainless steel clamp-and-shield assemblies.
2. Copper Pipe: ASTM B306, DWV. Fittings: ANSI/ASME B16.3, cast bronze, or ANSI/ASME B16.29, wrought copper. Joints: ANSI/ASTM B32, solder, Grade 50B.
3. Polyvinyl Chloride (PVC) Plastic Pipe (Type DWV): ASTM D2665. Fittings: PVC, Type DWV – ASTM D3311. Joints: Solvent cement in accordance with ASTM D2855.

PART 3 - EXECUTION

3.1 INSTALLATION

A. Install Sanitary Waste and Vent Piping as shown on the Contract Drawings and in accordance with the manufacturer's installation instructions.

B. All areas shall be interpreted as industrial and all piping shall be installed exposed unless otherwise shown or specified.

C. Areas with a finished ceiling indicated on the Contract Drawings "Room Finish Schedule" shall have all piping concealed unless otherwise shown or specified.

D. Sleeves shall be provided where piping passes through floors and walls.

1. Sleeves shall be caulked watertight or gastight as required.
2. Where water tightness or gas tightness is not required and the pipe is insulated, the sleeve shall be sized to permit full insulation thickness of pipe to be installed through the sleeve.

E. Leakage tests shall be as specified.

F. No fixture or equipment shall be connected directly to the potable water system in such a manner that a cross-connection exists and backflow of contaminated water into the potable water system could occur.

G. All piping, except where noted, shall be kept as high as possible.

H. All connections between ferrous and non-ferrous piping and equipment shall be made with dielectric unions.

I. Copper piping installed in concrete shall be coated with bitumastic paint.

J. Piping shall not be installed across or in front of doors or windows.

K. All piping shall be routed parallel to building column lines.

L. Cleanouts shall be installed at the base of all risers and below floors and where shown.

1. Cleanouts shall be the full size of the pipe up to and including four (4) inches in diameter. Cleanouts on pipe larger than four (4) inches in diameter shall remain 4 inches in diameter.
2. Cleanouts installed buried below the floor shall have deckplate cleanouts (DPCO). Cleanouts concealed in walls or partitions shall have wallplate cleanouts.

M. Testing Agency: Engage a qualified independent testing agency to perform specified testing.

a. Test results that comply with requirements.
b. Test results that do not comply with requirements and corrective action taken to achieve compliance with requirements.

3.2 PROTECTION

A. Protect installed equipment from damage through Substantial Completion.

END OF SECTION

SECTION 22 13 19

SANITARY WASTE PIPING SPECIALTIES

PART 1 - GENERAL

1.1 SUMMARY

A. This Section includes Sanitary Waste Piping Specialties including floor drains and cleanouts, as shown on the Contract Drawings.

1.2 REFERENCES

A. Comply with the latest revisions of the following codes, standards and specifications, except where more stringent requirements have been specified herein:

1. American National Standards Institute (ANSI)/American Society of Sanitary Engineering (ASSE)
2. American National Standards Institute (ANSI)
   a. ANSI A112.21.1 - Floor Drains.
3. Plumbing Code of New York State.
4. American Society for Testing and Materials (ASTM)

1.3 COORDINATION REQUIREMENTS

A. Coordinate layout and installation of Sanitary Waste Piping Specialties with electrical equipment, light fixtures, HVAC equipment and ductwork, piping, and roof drains.

1.4 SUBMITTALS

A. Submit the following in accordance with the General Provisions.

B. Product Data: “Catalog cuts” and spec sheets marked to specifically indicate the equipment and materials proposed for this project. Indicate selections with arrows, and cross out irrelevant data.

1.5 QUALITY ASSURANCE

A. Qualifications

1. Manufacturer’s Factory Qualifications: Manufacturing facilities shall have accreditation to ISO 9000:2000 or an equivalent quality management system acceptable to the Engineer.

1.6 WARRANTY

A. [Provide parts and labor warranty in accordance with the General Provisions.

PART 2 - PRODUCTS

2.1 FLOOR DRAINS (F.D.)

A. Manufacturers:

1. 1. J.R. Smith Manufacturing Company.
2. Zurn Industries, Inc.
3. Josam Manufacturing Company.
4. Or equal.

B. Description:

1. Type “A” floor drain to be used in finished areas. The drain shall have a cast iron body with a flashing collar, an adjustable nickel bronze strainer head with a 6-inch diameter round top a 1/2-inch trap primer connection and a bottom outlet connection.
2. Type “B” floor drain to be used for indirect waste. The drain shall have a cast iron body and flashing collar, seepage openings, 8-inch diameter nickel-bronze adjustable strainer head with 4-inch nickel-bronze funnel attached, 1/2-inch trap primer connection, and a bottom outlet connection.

2.2 DECKPLATE CLEANOUT (D.P.C.O.)

A. Manufacturers:

1. J.R. Smith Manufacturing Company.
2. Zurn Industries, Inc.
3. Josam Manufacturing Company.
4. Or equal.

B. Description:

1. Cleanout for finished floor areas shall have a cast iron body with round nickel-bronze adjustable top.
2. Cleanout for unfinished floor areas shall have a cast iron body with round extra heavy duty cast iron adjustable top.

2.3 WALL CLEANOUT FRAME AND COVER (W.C.O.)

A. Manufacturers:

1. J.R. Smith Manufacturing Company.
2. Zurn Industries Inc.
3. Josam Manufacturing Company.
4. Or equal.

B. Description:

1. A. Wall cleanout frame and cover shall be square with a secured bronze cover. Opening shall be 8 inches square.

PART 3 - EXECUTION

3.1 EXAMINATION

A. Examine areas and conditions for compliance with manufacturer's installation recommendations and requirements.

B. Examine walls, floors, roofs, and concrete bases for suitable conditions for installation, for example, all overhead work of other trades is complete.

C. Proceed with installation only after unsatisfactory conditions have been corrected.

3.2 INSTALLATION

A. Install sanitary waste piping specialties as shown on the Contract Drawings and in accordance with the manufacturer's installation instructions.

B. Refer to Division 22 Section "Common Work Results for Plumbing" for piping joining materials, joint construction, and basic installation requirements.

END OF SECTION

SECTION 22 33 00

ELECTRIC DOMESTIC WATER HEATERS

PART 1 - GENERAL

1.1 SUMMARY

A. This Section includes Electric Domestic Water Heaters as shown on the Contract Drawings.

1.2 REFERENCES

A. Comply with the latest revision of the following codes, standards and specifications, except where more stringent requirements have been specified herein:

1. American Society for Testing and Materials (ASTM)
2. American National Standards Institute (ANSI)
   a. ANSI/UL 1453 – Electric Booster and Commercial Storage Tank Water Heaters.
3. ASME B120.1 – Pipe Threads, General Purpose (inch).
4. Underwriters Laboratories (UL)
   a. UL 94 – Tests for Flammability of Plastic Materials for Parts in Devices and Appliances.
   b. UL 499 – Standard for Electrical Heating Appliances.
   c. ETL/UL 508 – Standard for Industrial Control Equipment.
5. National Sanitation Foundation (NSF)
   a. NSF 61 – Drinking Water System Components – Health Effects.

1.3 COORDINATION REQUIREMENTS

A. Coordinate layout and installation of Electric Domestic Water Heaters with process piping.

1.4 SUBMITTALS

A. Submit the following in accordance with the General Provisions.

B. Product Data: “Catalog cuts” and spec sheets marked to specifically indicate the equipment and materials proposed for this project. Indicate selections with arrows, and cross out irrelevant data.

1.5 QUALITY ASSURANCE

A. Qualifications

1. Manufacturer’s Factory Qualifications: Manufacturing facilities shall have accreditation to ISO 9000:2000 or an equivalent quality management system acceptable to the Engineer.

1.6 WARRANTY

A. Provide parts and labor warranty in accordance with the General Provisions.

PART 2 - PRODUCTS

2.1 ELECTRIC WATER HEATERS

A. Manufacturers:
1. A.O. Smith Company
2. State Water Heaters
3. Or equal

B. Description:
1. Electric water heaters shall be commercial style water heaters with storage capacities and heater element requirements as scheduled on the Contract Drawings.

PART 3 - EXECUTION

3.1 EXAMINATION

A. Examine areas and conditions for compliance with manufacturer's installation recommendations and requirements.

B. Verify that ground connections are in place and that installation of grounding described in Section "Grounding" is complete.

C. Proceed with installation only after unsatisfactory conditions have been corrected.

3.2 INSTALLATION

A. Install Electric Domestic Water Heaters as shown on the Contract Drawings and in accordance with the manufacturer's installation instructions.

3.3 MANUFACTURER'S FIELD SERVICES

A. Engage a factory-authorized service representative to perform the following inspections, checks, and supervision of testing:
1. Inspect field-assembled components, equipment installation, and electrical connections for compliance with the manufacturer's installation recommendations and requirements.
2. Set field-adjustable settings to the values recommended by the equipment manufacturer.
3. Test and adjust controls and safety devices. Replace damaged and malfunctioning controls and components.
4. Supervise tests performed by independent testing firms. Witness initial energization and perform or supervise startup services.

3.4 PROTECTION

A. Protect installed equipment from damage through Substantial Completion.

END OF SECTION

SECTION 22 40 00

PLUMBING FIXTURES

PART 1 - GENERAL

1.1 SUMMARY

A. This Section includes Plumbing Fixtures including water closets, , lavatories, sinks, water coolers, rough-in and final connections of fixtures as shown on the Contract Drawings.

1.2 REFERENCES

A. Materials and installation shall be in accordance with the latest revisions of the following codes, standards and specifications, except where more stringent requirements have been specified herein:

1. American Society of Mechanical Engineers – ASME
   a. ASME A112.18.1 – Plumbing Fixture Fittings.
   b. ASME A112.19.1 – Enameled Cast Iron Plumbing Fixtures.
   c. ASME A112.19.2 – Vitreous China Plumbing Fixtures.
   d. ASME A112.19.3 – Stainless Steel Plumbing Fixtures.
   e. ASME A112.19.6 – Hydraulic Performance for Water Closets and Urinals.
   f. American Society of Sanitary Engineering – ASSE
   g. ASSE 1037 – Performance Requirements for Pressurized Flushing Devices for Plumbing Fixtures.
2. American Society for Testing and Materials (ASTM)
3. American National Standards Institute (ANSI)
4. Plumbing Code of New York State

1.3 SUBMITTALS

A. Submit the following in accordance with the General Provisions.

B. Product Data: “Catalog cuts” and spec sheets marked to specifically indicate the equipment and materials proposed for this project. Indicate selections with arrows, and cross out irrelevant data.

1.4 QUALITY ASSURANCE

A. Qualifications

1. Manufacturer’s Factory Qualifications: Manufacturing facilities shall have accreditation to ISO 9000:2000 or an equivalent quality management system acceptable to the Engineer.

1.5 WARRANTY

A. Provide parts and labor warranty in accordance with the General Provisions.

PART 2 - PRODUCTS

2.1 WALL HUNG WATER CLOSETS

A. Manufacturers:

1. American Standard.
2. Crane Plumbing.
3. Kohler.
4. Or equal.

B. Description:

1. Wall Hung Water Closet shall be a vitreous china toilet suitable for flushing with 1.5 gallons. Unit shall have direct-fed siphon jet action, elongated bowl, off-floor mounting and a 1-1/2 inch top inlet spud connection. Unit shall meet requirements of ASME A112.19.2 and ASME A112.19.6.

2.2 WATER CLOSET FLUSH VALVES

A. Manufacturers:

1. Sloan Valve Company.
2. Zurn Industries.
3. Or equal.

B. Description:

1. Flush valve for Wall Hung Water Closet shall be a 1-1/2 inch top spud type with a 1-inch I.P.S. inlet, metal non-hold-open handle, vacuum breaker, adjustable tailpiece, and wall and spud flanges. Unit shall meet requirements of ASSE 1037.

2.3 WATER CLOSET SEATS

A. Manufacturers:

1. Beneke.
2. Church.
3. Kohler.
4. Or equal.

B. Description:

1. Seat for Water Closet shall be white solid plastic with extended back, open front, check hinge and of the elongated design.

2.4 WALL-MOUNTED LAVATORY

A. Manufacturers:

1. American Standard Inc.
2. Kohler.
3. Or equal.

B. Description:

1. Wall-mounted lavatory for the handicapped shall be a vitreous china wheelchair lavatory with a front over-flow, faucet holes on 4 inch centers, and suitable for concealed arm support. Unit shall meet requirements of ASME A112.19.2.
2. Fittings for lavatory for the handicapped shall in-clude faucet with wrist handles 4-inch on center, gooseneck spout, valves with renewable seats, aerator with flow restrictor, 1/2 inch inlets, chrome finish, and offset grid drain with 1-1/4 inch tailpiece. Unit shall meet requirements of ASME A112.18.1.

2.5 SERVICE SINK

A. Manufacturers:
1. American Standard Inc.
2. Kohler.
3. Or equal.

B. Description:
1. Service sink shall be an enameled cast iron sink drilled for faucet through the back. The sink shall be provided with a rim guard and a 3-inch trap with a cleanout plug and strainer.
2. Service sink trim shall include a rough plated faucet, vacuum breaker, and threaded spout with a pail hook. Unit shall meet requirements of ASME A112.18.1.

2.6 KITCHEN SINK

A. Manufacturers:
1. American Standard Inc.
2. Elkay.Kohler.
3. Or equal.

B. Description:
1. Kitchen sink shall be a self-rimming double compartment stainless steel sink. Unit shall meet requirements of ASME A112.19.3.
2. Fittings for kitchen sink shall include a polished center-set swing faucet with lever handles, valves on 8-inch center, aerator with 2.2 gpm flow restrictor, and vacuum breaker. Unit shall meet requirements of ASME A112.18.1.

2.7 WATER COOLERS

A. Manufacturers:
1. Ebco Manufacturing.
2. Elkay Manufacturing Company.
3. Haws Drinking Faucet Company.
4. Or equal.

B. Description:
1. Surface-mounted electric water cooler for the handicapped shall have a delivery capacity of seven (7) gallons of water per hour at 50 deg F based on room temperature of 90 deg F, and an inlet water temperature of 80 deg F. Operation shall be at 120 VAC, 1 phase, 60 Hertz.

2.8 GENERAL

A. All components of like size and type shall be the product of the same manufacturer for purposes of parts interchangeability.

PART 3 - EXECUTION

3.1 EXAMINATION

A. Examine areas and conditions for compliance with manufacturer's installation recommendations and requirements.

B. Examine walls, floors, roofs, and concrete bases for suitable conditions for installation, for example, all overhead work of other trades is complete.

C. Proceed with installation only after unsatisfactory conditions have been corrected.

3.2 INSTALLATION

A. Install Plumbing Fixtures as shown on the Contract Drawings and in accordance with the manufacturer's installation instructions. Install equipment and accessories in accordance with the configuration shown on the Contract Drawings.

3.3 PROTECTION

A. Protect installed equipment from damage through Substantial Completion.

END OF SECTION

SECTION 22 45 00

EMERGENCY PLUMBING FIXTURES

PART 1 - GENERAL

1.1 SUMMARY

A. This Section includes emergency eyewash and showers as shown on the Contract Drawings.

1.2 REFERENCES

A. Comply with the latest revision of the following codes, standards and specifications, except where more stringent requirements have been specified herein:

1. American Society for Testing and Materials (ASTM)
2. American National Standards Institute (ANSI)
   a. ANSI Z358.1 – Emergency Eyewash and Shower Equipment.

1.3 COORDINATION REQUIREMENTS

A. Coordinate layout and installation of Emergency Plumbing Fixtures with electrical equipment, HVAC equipment and ductwork, and piping.

1.4 SUBMITTALS

A. Submit the following in accordance with the General Provisions.

B. Product Data: “Catalog cuts” and spec sheets marked to specifically indicate the equipment and materials proposed for this project. Indicate selections with arrows, and cross out irrelevant data.

1.5 QUALITY ASSURANCE

A. Qualifications

1. Manufacturer’s Factory Qualifications: Manufacturing facilities shall have accreditation to ISO 9000:2000 or an equivalent quality management system acceptable to the Engineer.

1.6 WARRANTY

A. Provide parts and labor warranty in accordance with the General Provisions.

PART 2 - PRODUCTS

2.1 EMERGENCY EYE-FACEWASH / SHOWER

A. Manufacturers:

1. Speakman Company.
2. Haws Drinking Fountain Company.
3. Or equal.

B. Description:

1. Emergency eye-facewash/shower shall be freestanding with a ring-operated deluge head and foot-operated eyewash. Unit shall be provided with floor stanchion, flow switch and interconnected fittings. Outdoor Units shall include insulation and electric 120 volt heat tracings.

2.2 LABRORATORY COUNTER EMERGENCY EYEWASH

A. Manufacturers:

1. Manufacturers: Speakman Company.
2. Haws Drinking Fountain Company.
3. Or equal.

B. Description:

1. Emergency eye wash shall be polished chrome plated designed for counter top or sink mounting. Single action low profile swing-away for mounting either right or left side of sink.

2.3 HEAT TRACED EMERGENCY EYEWASH/SHOWER

A. Manufacturers:

1. Manufacturers: Speakman Company.
2. Haws Drinking Fountain Company.
3. Or equal.

B. Description:

1. Unit shall be a heat traced combination shower which combines an ABS showerhead and eye/face wash assembly. The emergency combination unit shall be equipped with green flip-top dust covers. The unit's safety features include: a thermal actuator bleed valve, 120V thermostat cable double wrapping inside piping, 3/4" insulation surrounding piping and outside jacket to prevent freezing, as well as a universal emergency sign. Unit shall be a Haws Model 8317CTFP or equal.

2.4 AUTOMATIC TEMPERING VALVE

A. Manufacturers

1. Manufacturers: Speakman Company.
2. Haws Drinking Fountain Company.
3. Or equal.

B. Description:

1. Automatic tempering valve (ATV) shall be mechanical with no electrical inputs, designed for use in emergency eye wash systems, close hot water flow if cold water fails, allow cold water if hot water fails, tempered water set point shall be 80 deg F. Unit shall be Model 9201 manufactured by Haws, or equal.

PART 3 - EXECUTION

3.1 EXAMINATION

A. Examine areas and conditions for compliance with manufacturer's installation recommendations and requirements.

B. Examine walls, floors, roofs, and concrete bases for suitable conditions for installation, for example, all overhead work of other trades is complete.

C. Verify that ground connections are in place and that installation of grounding described in Section "Grounding" is complete.

D. Proceed with installation only after unsatisfactory conditions have been corrected.

3.2 INSTALLATION

A. Install Emergency Plumbing Fixtures as shown on the Contract Drawings and in accordance with the manufacturer's installation instructions.

B. Emergency eye showers shall be installed in accordance with ANSI Z358.1.

3.3 PROTECTION

A. Protect installed equipment from damage through Substantial Completion.

END OF SECTION

SECTION 44 42 23.07

INCLINED PLATE CLARIFIERS - PRE-PURCHASE SPECIFICATION

PART 1 - GENERAL

1.1 SUMMARY

A. This Section includes the covered flash mix tanks, flocculation tanks and inclined plate clarifier (IPC) system, including mixers and associated control panels as shown on the Contract Drawings. Refer to the attached Process and Instrumentation Drawing (P&ID) for an example schematic of the system. The space allocated for the system is as shown on the enclosed General Arrangement Plan. The general scope of the work is to furnish, deliver, and provide start-up assistance for the IPC system, so that a complete system successfully performs as designed

B. The information provided is based upon sixteen frac tank clarifier units. The type, size and quantity of these IPC units are what were used to develop the design basis for this project. However, the intent is to specify performance-based equipment. Quantities, sizes and types are all subject to change based upon the equipment manufacturer's compliance to the performance criteria described herein. Manufacturers shall consider alternate equipment, as needed, to optimize the design to propose more cost effective alternatives. As such, traditional IPC units, or other differences will be acceptable and will be considered. The IPC units shall be kept to Manufacturer's standard offerings, as much as possible. Any requests in this RFP which, in the Vendor's opinion, impart unnecessary costs or unnecessarily differ from Manufacturer's standard offerings shall be clearly identified in Bidder's proposal

C. The IPC system shall be designed to precipitate dissolved metals and remove total suspended solids (TSS). A 20 percent solution of aluminum sulfate (alum) will be added to the flash mix tank to attain the desired solution concentration with the IPC feed water. Chemical storage and feed equipment are provided by others.

D. The system is planned to be installed (by others) inside a structure at the Owner's facility and operated approximately seven months out of each year (April 15th through November 15th) for four years beginning in the year 2012. In addition to the short-term (4-year) treatment trains, a long-term treatment train (which includes an IPC component) will also be operated at the same Owner's facility. This long-term treatment train will be designed to treat a much lower flow rate. The long-term IPC unit will treat the same water (contains the same constituents at the same concentrations as shown on Table 2) but at a maximum flow rate of 500 gpm, and for an expected operational lifespan of 20 years. The long-term unit(s) shall be within a heated building. The Manufacturer shall select equipment such that an appropriately-sized IPC unit(s) is shared between the "short-term" and the "long-term" treatment trains (i.e. serving as a part of the short-term IPC system during the seven months of "summer" operation and then used as part of the lower-flow, long-term system during the winter months for the first four years and year-round after year 4).

Even though the short-term equipment will be located inside a structure, the structure is not heated and therefore the units are subject to freezing during the non-operational

winter months (but after they have been drained). Manufacturer shall identify required means, methods and procedures, if any, needed to prepare units for storage over the winter months.

E. Start-up services shall be provided. Provide a factory representative for up to 40 hours of field start-up assistance at the Owner's facility.

F. The equipment shall fit within the footprint allocated as shown on the General Arrangement Drawing GA-01 provided herein. The clarifier system shall be serviceable, including removal of plates and mixers, within the building's clear height. There is no lifting mechanism proposed above the IPC. Manufacturer shall identify any operational or maintenance clearances required with the Bid. The equipment will need to fit through the building's overhead door which has dimensions of 14 feet x 18 feet. The building will be new construction. Manufacturer shall advise if a larger overhead door opening is required. Manufacturer is to confirm that the equipment can enter the building via the overhead door and be moved to the positions shown on drawing GA-01. The clear height at the building eave is estimated at 18'-0". At the planned location of the north end of the IPC's, the clear height is approximately 20'-6". Additional clear height is available between roof support members.

1.2 REFERENCES

A. Comply with the latest revision of the following codes, standards and specifications, except where more stringent requirements have been specified herein:

1. American Society of Mechanical Engineers (ASME)

2. American Society for Testing and Materials (ASTM)

3. American National Standards Institute (ANSI)

4. NACE International

5. National Electric Code (NEC)

1.3 COORDINATION REQUIREMENTS

A. Coordinate delivery with project schedule as maintained by Construction Supervisor.

B. Coordinate with Engineer and Control System Integrator for controls integration.

C. Bid Review Meeting: Following the Engineer's review of the proposal, a bid review meeting will be held in Syracuse, NY.

D. Scheduling: The IPC system must be operational before April 2012. Refer to RFP Section IV "Information" Schedule Milestones for schedule dates.

1.4 SUBMITTALS

A. Prepare and provide drawings and submittals specific to this system in accordance with the requirements shown on Table 1 (provided as Appendix A to this specification).

B. Product Data Submittals: “Catalog cuts” and spec sheets included as submittals shall be marked to specifically indicate the equipment and materials proposed for this project. Indicate selections with arrows, and cross out irrelevant data.

C. Submittal data for motors shall be in accordance with the attached Specification 26 05 13 “Electric Motors.”

D. Operation and Maintenance Data

1. Presentation of Submittals

a. Operational and Maintenance Manuals (3 hard copies each in a 3-ring binder and 1 electronic copy). Owner’s name, address, equipment serial numbers, and model numbers shall be clearly identified on the cover. Include Manufacturer and local service representative contact information, including phone numbers and e-mail addresses, on the cover.

b. Each manual shall include a table of contents, an index, and sequential section dividers separating equipment information into subsections. Each manual shall incorporate, at a minimum, the following: field installation instructions, written operation description of the equipment and corresponding components, starting and stopping procedures, routine maintenance procedures, procedures for protecting the equipment during short-term and long-term downtime, schedules, parts lists, troubleshooting topics, illustrations and diagrams and safety instructions for operating personnel.

c. Each manual shall include any other information that is required by maintenance personnel for proper operation and maintenance.

d. Electronic files of the complete operation and maintenance manual are to be provided on CD.

1.5 QUALITY ASSURANCE

A. Qualifications

1. Manufacturer to provide description of relevant past experience providing IPC systems. Especially of interest is past experience with projects where IPC units were used to clarify water from dredging operations or surface water clean-up projects. Manufacturer shall provide a list of references and contact information.

2. Seismic Design Engineer Qualifications: A professional engineer who is legally qualified to practice in the jurisdiction where Project is located and who is experienced in providing structural and seismic engineering services, including the design of seismic restraints.

3. Owner or Owner’s Representative will be conducting scheduled visits to Manufacturer’s facilities during fabrication and/or Manufacturer’s shop testing procedures.

1.6 DELIVERY, STORAGE AND HANDLING

A. As required, disassemble and deliver IPC system in the minimum number of pieces.

B. Site access is via a one-way access road, parts of which are steeply graded. Equipment Manufacturer to ensure adequate means of delivery is provided to enable delivery to the site. A site visit prior to delivery is recommended.

C. Materials and equipment shall be boxed, crated or otherwise completely protected during shipment, delivery, storage and handling. Such boxes, crates or protection shall be clearly labeled with the Manufacturer's and Owner's name, site address, project equipment tag numbers, brand or model.

D. Ship, deliver, store and handle to prevent damage and in accordance with Manufacturer's written instructions. Provide factory-installed lifting provisions.

E. The IPC system shall be delivered freight on board (FOB) to the project site.

F. Manufacturer's storage requirements shall be provided. Units will be stored outside and unprotected from weather events for a prolonged period of time prior to installation. Manufacturer shall provide adequate packaging and protection so as to prevent damage under these conditions.

G. Off-loading of equipment delivered to the site is by Others.

1.7 WARRANTY

A. Provide parts and labor warranty in accordance with the Purchase Order General Terms and Conditions, and the Supplemental Terms and Conditions.

B. The standard warranty duration shall be from delivery date of units to one year after start-up. Start-up is defined as the initiation of operational commissioning (assume start-up to begin on April 30, 2012). Provide with the Bid the cost adder to extend the warranty to 42 months after start-up, as described in the Bid Tab document. The standard warranty shall include parts and labor for all supplied items, including but not limited to, equipment, controls, and coating system.

1.8 PERFORMANCE GUARANTEE

A. Performance shall be warrantied and proven. Performance shall be demonstrated continuously for four weeks after start-up under full operating conditions. Performance testing is by others. IPC Manufacturer's Representative shall be present at the site to witness a portion of the performance testing, per Section 3.5.B.2, and provide input as requested. The IPC system shall be designed to achieve effluent concentrations, given the maximum influent concentrations provided on Table 2. Performance shall be warrantied over the entire range of flow rates. Anticipated maximum influent and required effluent concentrations, and minimum and maximum flow rates for the system are provided in Table 2. If the equipment fails to continuously meet this effluent quality, the Manufacturer shall, at no additional cost to the Owner or Buyer, provide and install replacement equipment, parts, and labor (including cost of return trips to the site as

needed), to correct demonstrated performance deficiencies as needed to achieve the required performance.

B. Process: the provided system shall achieve an effluent TSS concentration of 10 mg/L or less. The design value for TSS concentration of the influent water is as shown on Table 2. If the influent TSS concentration exceeds the design value, than 95% removal is required. If the equipment fails to continuously meet this effluent quality, the Manufacturer shall, at no additional cost to the Owner or Buyer, provide and install additional or replacement equipment, parts and labor to correct demonstrated performance deficiencies as needed to achieve the required performance.

PART 2 - PRODUCTS

2.1 MANUFACTURERS

A. The following Manufacturers are named to establish a standard of quality necessary for the Project:

1. Unipure
2. Graver
3. Parkson
4. Siemens
5. WesTech
6. Or approved equal

2.2 PERFORMANCE REQUIREMENTS

A. The influent water characteristics shall be as shown in Table 2 (see Appendix B to this specification).

B. The flash mix tank criteria shall be as follows:

Application	Chemical addition
Number of Flash Mix Tanks	Manufacturer to identify
Alum Dosage (Note 1)	20 mg/L
Flash Mix Tank Residence Time, Minimum	1 – 5 minutes, Manufacturer to confirm
Flash Mix Tank Mixer, Motor (Note 1)	Manufacturer to provide HP
Flash Mix Tank Mixer, Type	Flange mounted, constant speed (Note 1).

Note 1: Motors shall be in accordance with requirements provided in Appendices.

C. The flocculation tank criteria shall be as follows:

Application	Chemical precipitation and solids coagulation
Number of Flocculation Tanks	Manufacturer to identify
Flocculation Tank Residence Time, Minimum	5 - 15 minutes, Manufacturer to confirm
Flocculation Tank Mixer, Motor (Note 1)	Manufacturer to provide HP

Flocculation Tank Mixer, Type	Flange mounted, variable speed (Note 1). VFD by Others.

Note 1: Motors shall be in accordance with requirements provided in Appendices. Mixer VFD's to be provided by Others.

D. The IPC criteria shall be as follows:

Application	Gravity settling of suspended solids
Number of IPC units	Manufacturer to identify
Material of Construction, Tank	Coated carbon steel, FRP or approved alternate MOC, as recommended by the Manufacturer.
Material of Construction, Plates	Manufacturer to provide
Projected Sludge Generation Rate (at Maximum Influent Flow of 5,668 gpm)	708 gpm
Projected Sludge Solids Concentration (as determined during jar testing)	0.85%
Sludge Withdrawal	Intermittent
Hopper Volume, Minimum	Manufacturer to provide
Effective Settling Area per IPC unit, Minimum	Manufacturer to provide
Surface Overflow Rate Range (based on treatability testing)	0.22 to 0.72 gpm/sf
Plate, Angle	Manufacturer to provide
Plate, Size	Manufacturer to provide
Plate Thickness, Minimum	Manufacturer to provide
Plate Perpendicular Spacing, Minimum	Manufacturer to provide
Number of Plates, Minimum	Manufacturer to provide
Weir Type	Flat plate, with gasket
Influent Nozzle Diameter	Manufacturer to provide
Effluent Nozzle Diameter	Manufacturer to provide
Drain/Sludge Hopper Nozzle Diameter	Manufacturer to provide
Hopper Sample Port Nozzle Diameter	¾" diameter
Hopper Sample Port Nozzles, Quantity	Manufacturer to provide

E. The inclined plate clarifier system shall be designed for an effluent TSS concentration of 10 mg/L or less. The design value for TSS concentration of the influent water is as shown on Table 2. If the influent TSS concentration exceeds the design value, than 95% removal is required.

F. The IPC system will receive water from dredged locations with different water makeup and varying settling properties. As such, treatability testing performed showed a range in the acceptable surface overflow rate of 0.22 to 0.72 gpm/sf (refer to attached Treatability Testing Report). However, Manufacturer shall select equipment and revise surface overflow rate as needed. Manufacturer shall size and propose equipment based on achieving the desired effluent TSS concentration, while optimizing equipment sizing to fit in allotted space, and minimizing operational and equipment cost. An important factor in the consideration of the award of the purchase contract for the IPC system will be Manufacturer's design and/or operational strategies, equipment sizing, and other ideas and concepts which place a high importance on maximizing treatment while minimizing

capital and operation/maintenance costs. Vendor shall present any original design alternatives with the Bid.

G. Although maximum concentrations and flow rates have been identified, actual flow rates and concentrations may be less than what is expected. The first year of operation will establish typical flow rates and concentrations and will be used to fine-tune equipment requirements and operational plans for future years of operation. As such, Vendor shall propose ways to optimize the design of the IPC system. Strategies such as the purchase of a core number of units during year one supplemented by lease of additional units as needed will be entertained. If actual conditions warrant the eventual purchase of these leased units, the accrued lease costs would then be applied towards the purchase of these units. Other strategies, as proposed by the Vendor with the Bid, are encouraged and will be evaluated.

H. The influent chamber of the inclined plate clarifier shall be designed to ensure even distribution of the influent.

I. The flash mix compartment shall be separated from the flocculation compartment by a baffle, separate structure, or other acceptable means.

J. The inclined plate clarifier system shall be designed to operate with the flow in an upward direction. The horizontal spacing of the plates shall be such that the maximum vertical velocity of the flow is at the maximum loading.

K. The inclined plates shall be removed as a unit or individually for cleaning and/or replacement. Manufacturer to identify weights, clearances required, recommended means of removal, and what additional lifting equipment is required.

L. The effluent shall be collected by an overflow box or trough with an adjustable weir. The weir shall be leveled to provide an even overflow across each weir plate and shall be positively assured by visual inspection. Design of weir adjustment must be adequate to compensate for differential settlement of the equipment as described herein.

M. The sludge collection area shall be sufficiently sized to collect sludge generated within the system. A nozzle(s) shall be provided at the bottom of the sludge collection area. A sludge auger is to be provided, if required. The nozzle shall be a connection point to remove sludge under tank hydraulic head from the sludge collection area and designed such that the sludge flows freely to the discharge point without buildup or short-circuiting. Vendor to recommend means and methods of sludge removal and sludge removal rate.

N. Each of the vessels (flash mix, flocculation, and clarifier) shall be provided with separate, removable, gasketed covers for containment of headspace vapors. Each cover will be provided with pick points for lifting, and will be designed to support live loads of 60 lbs per square foot and super-imposed equipment dead loads of 10 lbs per square foot, plus all mixer loads (i.e. vertical downward load, bending moment, static moment, torque, etc.). OSHA-approved 5,000 lb. tie-off points for personnel shall be included. Each of the covers shall be provided with load-rated viewports as follows:

1. One viewport for Flash Mix
2. One viewport for Flocculation chamber
3. Two viewports for clarifier section; one at each end

Inspection ports shall be equipped with manual quick release latches.

O. The covered headspaces above the flash mix tank, flocculation tank, and the clarifier shall be vented to atmosphere via adequately sized vent nozzles. The tanks shall be designed for atmospheric service (no pressure) under maximum inflow and outflow conditions.

P. Electrical classification in the headspace of the tanks and outside of the tanks is designated as ordinary.

Q. An elevated access platform (constructed with OSHA-compliant materials of construction) shall be provided, as necessary, to enable routine maintenance and cleaning at the top of the covers. Handrails and guardrails shall comply with the attached Specification 05 52 13 – Pipe and Tube Railings. Manufacturer shall provide in the base bid pricing, the cost for a platform and access to that platform at the top of each IPC unit. If possible, (and as shown on the General Arrangement Drawing,) it would be preferred to share platforms between pairs of IPC units such that the quantity of access ladders and platforming is kept to a minimum. For example, in the General Arrangement Drawing equipment shown, eight access ladders would be required in the base bid. Each pair of IPC units could have one (combined) ladder for access to the top of the units and one handrail/guardrail system around the perimeter of both units together.

In addition, provide pricing for staircases in lieu of ladders in the Base Bid. Manufacturer is to indicate (and include pricing for) the recommended platform arrangement being proposed.

Manufacturer shall also provide optional separate pricing to provide gangplank type platforms between the IPC units such that personnel would be able to access all the IPC covers via one platform without the need to climb up and down ladders/stairs for each unit. Gangplanks shall be used in lieu of fixed platforms to be able to absorb lateral and vertical movement between the units. Manufacturer shall consider the most cost efficient way to allow access to the units while allowing for lateral and vertical movement and taking into account ease of operator access. For the optional gangplank type platform, Manufacturer shall adjust the number of access ladders/stairs to three (one on each end of platform and one in central location).

Locations of top nozzles, manways, and equipment or instrumentation located on the tops of tanks shall be grouped together as much as possible, and located outside of main access paths to avoid trip hazards for personnel walking on the access platforms.

R. The interiors of the clarifier vessels, equipment, piping, coating system, and all wetted ancillaries shall be selected by the Manufacturer to be compatible with constituents found in the water up to the combined maximum concentrations identified in Table 2 (see Appendix B). Note the water exhibits chlorides and organic compound solvent concentrations. When selecting materials of construction, the Manufacturer shall also consider the expected project lifespan of 4 years, and potential buy-back option after completion of the anticipated 4-year term, and select materials of construction accordingly, except for the single “shared” system that is expected to remain operational for the long-term project life and as addressed by the alternative materials of construction described in the Bid Tab Items.

S. All tanks, equipment items, valves, and instruments shall be provided with stainless steel tags. Tags shall be permanently affixed or chained to the item, and will indicate the tag number and description of the item as shown on the P&ID (e.g., IPC-0601 Inclined Plate Clarifier). Lettering on the tag shall be etched or struck, with a minimum letter height of 0.5 inches.

T. All units and equipment shall be designed to resist the design loads per the Building Code of New York State (BCNYS) 2007 edition, including sloshing effects resulting from a hydrodynamic and/or seismic analysis. Vessel/equipment support layout details, including locations of anchor bolt holes, anchor bolt size and type, and embedment length shall be provided. Maximum Reaction Forces and moments at each anchor point shall be provided. The structural design criteria provided below for this site are preliminary, based on initial information available for the site, and are subject to change upon completion of a site geotechnical evaluation. Finalized structural design criteria will be provided prior to award of purchase order. Once finalized design criteria is provided, Manufacturer to certify that equipment design and anchoring is in compliance with the finalized structural design criteria. Draft structural design criteria are as follows:

SEISMIC DESIGN CRITERIA:

Seismic Importance Factor, I_E	1.25
Seismic Use Group	II
Mapped Spectral Response Acceleration, S_S	0.192 g
Mapped Spectral Response Acceleration, S_1	0.078 g
5% Damped Spectral Response Acceleration at Short Periods, S_{DS}	0.32 g
5% Damped Spectral Response Acceleration at 1 sec Periods, S_{D1}	0.182 g
Seismic Design Category, SDC	C

U. The IPC units will be placed on a former wastebed. As such, the soils are limited in the amount of weight they can support. Units must be designed to limit loading to less than 1,500 pounds per square foot at floor contact points when full of water. Skid mounting of equipment may be necessary to achieve this acceptable loading. Manufacturer shall advise in Bid. IPC units are to be installed on either timber mats or concrete pads. Manufacturer to identify any concerns with planned support arrangement (i.e. embedment into timber mats, etc.). Because of the properties of the soil, it is expected that potentially uneven settlement will occur. Assume the maximum acceptable settlement is as follows: less than 3/4" differential settlement across each unit and less than 1.5" of total overall settlement. Equipment Manufacturer shall identify the maximum acceptable differential settlement their unit can encounter without affecting the equipment or its operation. Means to relevel shall be provided.

V. Manufacturer shall identify minimum flow rate into the individual IPC's that will still allow for proper treatment and operational performance. Manufacturer shall identify minimum and maximum acceptable hydraulic flow for each unit (flash tank, flocculation tank, and clarifier) and provide this information with the Bid.

W. Each unit shall be equipped with a minimum of four lifting lugs to facilitate lifting/rigging.

X. The attached P&ID's show IPC system arrangement utilizing frac tank vessels. The P&ID's are to be used only as examples of the functionality of an IPC system. Alternate

types of systems, such as traditional IPC clarifiers with integral Flash Mix (adder) and Flocculation tanks will be considered.

Y. Controls, alarms, and sludge pumps or sludge discharge valves (if hydraulic head discharge of sludge is used) are by others. Manufacturer shall recommend alarm conditions and setpoints (for example "Mixer Off" setpoint, etc.), as appropriate.

Z. Instruments to be provided by the Manufacturer, as indicated herein, shall comply with the attached Specification 16900, Instrumentation and Controls Requirements. Controls and alarms associated with the IPC system are to be integrated into a Distributed Control System (DCS). Programming and hardware associated with the DCS is by others. The Manufacturer shall provide supporting documents as specified in Specification 16900, "Instrumentation and Controls Requirements," as required.

AA. Manufacturer shall provide one spare for each different instrument provided. In addition, one spare mixer of each different type provided by Manufacturer shall be provided.

BB. The Manufacturer shall conduct shop testing to satisfy hydraulic conditions of each component. The IPC systems shall be hydrostatically leak tested by filling units at the Manufacturer's shop prior to delivery to the site. Certified test reports for each unit shall be provided prior to delivery.

CC. All tank nozzles shall be provided with flanges designed in accordance with ASME B16.5, 150# flanges. Nozzle projections shall be of sufficient lengths to allow access to flange bolts and nuts.

DD. Any stainless steel bolts shall be applied with anti-seize thread lubricant.

2.3 COMPONENTS

A. Flash Mix Tank and Mixer(s) (submitted as adders)

1. The flash mix tank shall provide the necessary mixing energy and detention time to completely mix and provide contact between the coagulant and the influent solids.

2. The flash mix tank mixers shall be constant speed. Motors shall be TENV or TEFC, 480 volt, three phase, 60 Hertz, with anticondensation heaters in accordance with Specification 26 05 13, "Electric Motors."

3. The tank shall be equipped with a removable cover. A cover gasket, or some other acceptable means to reduce potential emissions from the removable cover, shall be provided. The cover shall also contain a viewport to allow visual inspection of floc formation.

4. A 30-inch diameter manway with a loose-bolted blind flange shall be provided on the top of the vessel to be used as a tank overflow. Materials of construction of the overflow manway flange shall be selected, and the overflow shall be designed, such that the flange would lift off to allow water to overflow. .

5. High and low level switches shall be provided. Level switches shall comply with attached Specification 16900, "Instrumentation and Controls Requirements."

6. The flash mix tank shall be provided with the following nozzles:

   a. 30-inch diameter influent nozzle.
   b. 4-inch diameter drain.
   c. 1-inch diameter alum inlet.
   d. Mixer flanges, as necessary.
   e. 4-inch diameter high level switch nozzle.
   f. 4-inch diameter low level switch nozzle.
   g. 30-inch diameter outlet.
   h. 30-inch diameter manway with loose-bolted blind flange (overflow).
   i. 4-inch diameter spare nozzle.
   j. 6-inch diameter spare nozzle.
   k. 30-inch diameter vent.

   Note: sizes of nozzles are based on equipment selected during preliminary design (one 18,000 gallon [nominal] flash mix tank) and may change based upon Manufacturer's equipment selection. Nozzle sizes/locations will be finalized after selecting equipment Manufacturer.

B. Flocculation Tank and Mixer(s)

1. The flocculation tank shall provide the necessary blending energy and detention time to facilitate the formation of large flocs.

2. The flocculation tank mixer(s) shall be variable speed and sufficient horsepower to provide adequate mixing. Motors shall be TENV or TEFC, 480 volt, three phase, 60 Hertz, inverter duty type (60 NEMA MG1, Part 31 compliant) with anticondensation heaters in accordance with attached Specification 26 05 13, "Electric Motors." The mixers shall be equipped with locally mounted variable speed controllers provided by Others. The controllers may be mounted to the inclined plate clarifier system in a position that will be accessible to operating personnel. Manufacturer to identify mixer speed ranges

3. The tank shall be equipped with a removal cover. A cover gasket, or some other acceptable means to reduce potential emissions from the removable cover, shall be provided. The cover shall also contain a viewport to allow visual inspection of floc formation and depth.

4. An 8-inch diameter nozzle with a loose-bolted blind flange shall be provided on the top of the vessel to be used as a tank overflow. Materials of construction of the overflow blind flange shall be selected, and the overflow shall be designed, such that the flange would lift off to allow water to overflow.

5. High and low level switches shall be provided. Level switches shall comply with attached Specification 16900, Instrumentation and Controls Requirements.

6. The flocculation tank shall be provided with the following nozzles:
   a. 8-inch diameter influent nozzle.

b. 4-inch diameter drain.
c. 8-inch diameter nozzle with loose-bolted blind flange (overflow).
d. Mixer flange(s), as necessary.
e. 4-inch diameter high level switch nozzle.
f. 4-inch diameter low level switch nozzle.
g. Overflow baffle (or other outlet, if not combined with IPC unit).
h. 4-inch diameter spare nozzle.
i. 6-inch diameter spare nozzle.

If Flocculation Tank and clarifier are not housed within the same tank with a shared headspace, then Flocculation Tank shall also be provided with an independent, appropriately sized outlet nozzle and vent.

Note: sizes of nozzles are based on equipment selected during preliminary design (representing one of sixteen flocculation tanks) and may change based upon Manufacturer's equipment selection. Nozzle sizes/locations will be finalized after selecting equipment Manufacturer.

C. Mixers General

1. The motors shall be designed in accordance with the requirements provided in the appendices herein.

2. The mixer Manufacturer shall be Lightnin, Chemineer, or approved equal.

3. The mixers shall be equipped with 316 stainless steel shafts and impellers, or approved alternate, as recommended by the Manufacturer (refer to Table 2).

4. Mixer blades shall be attached to shaft by keyways. Blades attached by set screws only are not acceptable.

D. Inclined Plate Clarifier System

1. The IPC shall be equipped with a removable cover. A cover gasket, or some other acceptable means to reduce potential emissions from the removable cover, shall be provided. Cover shall be removable to allow access and/or removal of the inclined plates for periodic cleaning. The cover shall contain two viewports, one of which will be an access/view hatch to allow visual inspection of a LNAPL (floating oil) removal device (e.g., floating boom, by others). Additionally, the Vendor shall provide a means of LNAPL collection by use of an underflow baffle or some other design feature in place to allow capture of floating LNAPL. Vendor shall identify means of LNAPL capture with the Bid.

2. The IPC tank shall be provided with the following nozzles:

a. 4-inch diameter drain.
b. 6-inch diameter treated water outlet
c. 4-inch diameter sludge outlet.
d. Sludge sampling ports, as necessary.
e. 8-inch vent.
f. 4-inch diameter spare nozzle.

g. 6-inch diameter spare nozzle.

If Flocculation Tank and clarifier are not housed within the same tank with a shared headspace, then clarifier shall also be provided with an independent, appropriately sized overflow with loose-bolted flange.

Note: sizes of nozzles are based on equipment selected during preliminary design (representing one of sixteen clarifier tanks) and may change based upon Manufacturer's equipment selection. Nozzle sizes/locations will be finalized after selecting equipment Manufacturer.

3. Inclined Plates

a. The plates shall be constructed of materials of construction, as recommended by the Manufacturer, to be suitable for the water chemistry (refer to Table 2).

4. Weir Plate

a. The weir plates shall be adjustable and unaffected by the chemicals identified in Table 2.
b. A gasket shall be installed between the weir plates and effluent trough. The gasket materials of construction shall be compatible with the water chemistry data (see attached Table 2).

5. Sludge Hopper

a. Sample ports shall be provided at varying elevations (in 6-inch increments) on the sludge hopper for sludge sampling.

2.4 SOURCE QUALITY CONTROL

A. Factory Assembly

1. Owner or Owner's Representative reserves the right to visit Manufacturer's factory during fabrication to witness progress and fabrication.

B. Factory Test

1. Each IPC system shall be factory tested as follows:

a. Manufacturer's standard inspections and tests
b. Hydrostatically tested by the Manufacturer at the shop prior to delivery to the site. Notice shall be given to the Engineer at least two weeks prior to hydrostatically testing the equipment, so that arrangements can be made for Engineer and/or other Owner's Representative to witness the testing at the Manufacturer's facility.

2. Submit factory test reports for approval prior to shipment.

2.5 SHOP FINISHES

A. All surfaces to be coated shall be prepared in accordance with PIP VESV1003HA and Honeywell's associated overlay document associated with the PIP specification. Surface preparation prior to coating application shall be in accordance with the NACE standard SP0178 and NACE SP0178 Appendix C NACE Weld Preparation Designation C, and coating Manufacturer's instructions, whichever is more stringent.

B. The Manufacturer shall provide a shop applied protective coating system for all interior metal surfaces of the IPC package in accordance with coating system manufacturer recommendations. The interior linings of the units shall be compatible with the influent parameters and concentrations presented in this specification (refer to Table 2) and shall be abrasion resistant for this intended use. Coal tar epoxy is not an acceptable interior lining. Proposed coating and lining systems and dry film thickness (DFT) of each coat and of the overall coating system proposed shall be provided with the Bid. Stainless steel does not require coating. Cathodic protection may be used for supplemental corrosion resistance, as recommended by the Manufacturer and at no additional cost.

C. The Manufacturer shall provide a shop-applied protective coating system (primer and suitable top coat(s)) for all exterior metal surfaces of the IPC system.

PART 3 - EXECUTION

3.1 EXAMINATION

A. As part of on-site start-up services, Manufacturer's representative shall examine areas and conditions for compliance with Manufacturer's installation recommendations and requirements.

B. Proceed with start-up only after unsatisfactory conditions have been corrected.

3.2 INSTALLATION

A. Installation is by others. Installation shall be per Manufacturer's instructions.

3.3 FIELD QUALITY CONTROL

A. The Manufacturer shall furnish the services of a Manufacturer's representative to inspect the installation (by others) and to provide start-up services for the units.

3.4 MANUFACTURER'S FIELD SERVICES

A. The on-site services of the Manufacturer's field representative shall be provided during the start-up and adjustment in accordance with this specification and as identified in the Bid Documents.

B. The services of the Manufacturer's field representative shall be provided during installation. The Manufacturer's field representative is not required to be on-site during installation efforts, but will be conferred if problems or questions occur during installation.

C. A factory-authorized service representative will perform the following inspections, checks, start-up, and supervision of testing per Section 3.5.B.1:

1. Inspect field-assembled components, equipment installation, and electrical connections for compliance with the Manufacturer's installation recommendations and requirements.

2. Set field-adjustable settings to the values recommended by the equipment Manufacturer.

3. Test and adjust controls and safety devices. Replace damaged and malfunctioning controls and components.

4. Witness and provide input as requested during on-site performance tests (testing to be performed by others)

5. Perform or supervise start-up services

6. Prepare written report to record the following:

a. Inspections and checks carried out on-site.
b. Optimization of chemical dosages.

3.5 DEMONSTRATION AND TRAINING

A. Engage a factory-authorized service representative to train Owner's maintenance personnel to adjust, operate, and maintain the equipment.

1. Review data in Operation and Maintenance manuals.

2. Schedule training with Owner or Engineer, with at least two weeks advance notice.

B. The services of the Manufacturer's representative shall be provided as separate visits, if required, for the minimum hours as listed below for each IPC system:

1. Twenty-eight hours for installation assistance, inspection, certification of installation and start-up.

2. Eight hours for performance testing.

3. Four hours for the owner's personnel training.

Manufacturer shall advise if the amount of hours specified are reasonable or provide the number of hours recommended if different than what is allotted above.

PART 4 - APPENDICES

A. Table 1 – IPC Submittal Schedule

B. Table 2 – Constituent Concentrations

C. Process Flow Diagram – PFD-1

D. P&ID's

1. Lead Sheets
2. I-03 Flash Mix Tank
3. I-06 Inclined Plate Clarifier

E. General Arrangement Plan – GA-01

F. Treatability Test Results

G. Specification 16900 - Instrumentation and Controls Requirements

H. Specification 26 05 13 – Electric Motors

I. Honeywell overlay document
1. Process Industry Practices (PIP) Standard VESV1003
2. Honeywell Specification MSL-2002 HW ***(not applicable for this contract)***

J NACE SPO178-2007 - Design, Fabrication, and Surface Finish Practices for Tanks and Vessels to Be Lined for Immersion Service

K. NACE SPO188-2006 - Discontinuity (Holiday) Testing of New Protective Coatings on Conductive Substrates

L. Specification 05 52 13 – Pipe and Tube Railings

END OF SECTION

SECTION 44 42 73

FRAC TANKS PRE-PURCHASE SPECIFICATION

PART 1 - GENERAL

1.1 SUMMARY

A. This Section includes work consisting of furnishing and delivering Frac Tanks as shown on the Process and Instrumentation (P&ID) drawings and General Arrangement Plan (attached as Appendices D and E, respectively). Refer to the attached P&ID drawings for example schematics of the systems. The space allocated for the tanks are as shown on the General Arrangement Plan.

1. Twelve Frac Tanks are required. The equipment shall include tanks and accessories for a completely assembled, ready to install and operate system.

2. The Frac Tanks shall be delivered FOB project site to 522 Gere Lock Road, Syracuse, NY 13209.

B. The system is planned to be installed (by others) inside a structure at the Owner's facility and operated approximately seven months out of each year (April 15th through November 15th) for four years beginning in the year 2012. In addition to the short-term (4-year) treatment trains, a long-term treatment train (which includes a total of five Frac Tanks) will also be operated at the same Owner's facility. The long-term tanks will treat the same water (contains the same constituents at the same concentrations as shown on Table 2 provided in Appendix B to this specification) but for an expected operational lifespan of 20 years. The long-term system will be in a heated space.

Even though the short-term tanks will be located inside a structure, the structure is not heated and therefore the short-term tanks are subject to freezing during non-operational winter months (but after they have been drained). Vendor shall identify required means, methods and procedures, if any, needed to prepare units for storage over the winter months.

C. The equipment shall fit within the footprint allocated as shown on the General Arrangement Drawing GA-01 provided herein. Manufacturer shall identify any operational or maintenance clearances required with the Bid. The equipment will need to fit through the building's overhead door which has dimensions of 14 feet width x 18 feet height. The building will be new construction. Vendor shall advise if a larger overhead door opening is required. Manufacturer is to confirm that the equipment can enter the building via the overhead door and be moved to the positions shown on drawing GA-01. The clear height at the building eave is estimated at 18'-0". Additional clear height is available between roof support members.

D. The Frac Tanks shall be kept to Manufacturer's standard offerings, as much as possible. New, used or refurbished tanks are acceptable if they meet the design intent and warranty requirements. Any requests in this RFP which, in the Vendor's opinion, impart

unnecessary costs or unnecessarily differ from Manufacturer's standard offerings shall be clearly identified in Bidder's proposal.

1.2 REFERENCES

A. Comply with the latest revision of the following codes, standards and specifications, except where more stringent requirements have been specified herein:

1. American Society of Mechanical Engineers (ASME)

2. American Society for Testing and Materials (ASTM)

3. American National Standards Institute (ANSI)

4. NACE International

5. National Electric Code

1.3 COORDINATION REQUIREMENTS

A. Coordinate delivery with project schedule as maintained by Construction Supervisor.

B. Bid Review Meeting: Following the Engineer's review of the proposal, a bid review meeting will be held in Syracuse, NY.

C. Scheduling: The Frac Tanks must be operational before April 2012. Refer to RFP Section IV "Information" Schedule Milestones Table for schedule dates.

1.4 SUBMITTALS

A. Prepare and provide drawings and submittals specific to this system in accordance with the requirements shown on Table 1 (provided as Appendix A to this specification).

B. Product Data Submittals: "Catalog cuts" and spec sheets included as submittals shall be marked to specifically indicate the equipment and materials proposed for this project. Indicate selections with arrows, and cross out irrelevant data.

C. Submittal data for motors shall be in accordance with the attached Specification 26 05 13 "Electric Motors."

D. Operation and Maintenance Data

1. Presentation of Submittals

a. Operational and Maintenance Manuals (3 hard copies each in a 3-ring binder and 1 electronic copy). Owner's name, address, equipment serial numbers, and model numbers shall be clearly identified on the cover. Include

Manufacturer and local service representative contact information, including phone numbers and e-mail addresses, on the cover.

b. Each manual shall include a table of contents, an index, and sequential section dividers separating equipment information into subsections. Each manual shall incorporate, at a minimum, the following: field installation instructions, brief written description of the equipment and corresponding components, routine maintenance procedures, procedures for protecting the equipment during short-term and long-term downtime, schedules, parts lists, troubleshooting topics, illustrations and diagrams and safety instructions for operating personnel.

c. Each manual shall include any other information that is required by maintenance personnel for proper operation and maintenance.

d. Electronic files of the complete operation and maintenance manual are to be provided on CD.

1.5 QUALITY ASSURANCE

A. Qualifications

1. Manufacturer shall provide a list of references and contact information.

2. Seismic Design Engineer Qualifications: A professional engineer who is legally qualified to practice in the jurisdiction where Project is located and who is experienced in providing structural and seismic engineering services, including the design of seismic restraints.

3. Owner or Owner's Representative reserves the right to conduct scheduled visits to Manufacturer's facilities during fabrication to witness progress and fabrication and/or during Manufacturer's shop testing procedures.

1.6 DELIVERY, STORAGE AND HANDLING

A. As required, disassemble and deliver Frac Tanks and ancillary equipment in the minimum number of pieces.

B. Site access is via a one-way access road, parts of which are steeply graded. Equipment Vendor to ensure adequate means of delivery is provided to enable delivery to the site. A site visit prior to delivery is recommended.

C. Materials and equipment shall be boxed, crated or otherwise completely protected during shipment, delivery, storage and handling. Such boxes, crates or protection shall be clearly labeled with the Manufacturer's and Owner's name, site address, project equipment tag numbers, brand or model.

D. Ship, deliver, store and handle to prevent damage and in accordance with Manufacturer's written instructions. Provide factory-installed lifting provisions.

E. Manufacturer's storage requirements shall be provided. Units will be stored outside and unprotected from weather events for a prolonged period of time prior to installation.

Manufacturer shall provide adequate packaging and protection to prevent damage under these conditions.

F. Off-loading of equipment delivered to the site is by Others.

1.7 WARRANTY

A. Provide parts and labor warranty in accordance with the Purchase Order General Terms and Conditions, and the Supplemental Terms and Conditions.

B. The standard warranty duration shall be from delivery date of units to one year after start-up. Start-up is defined as the initiation of operational commissioning (assume start-up to begin on April 30, 2012). Provide with the Bid the cost adder to extend the warranty for 42 months after start-up, as described in the Bid Tab document. The standard warranty shall include parts and labor for all supplied items, including but not limited to, equipment, controls, and coating system. Any defects in equipment shall be corrected by Manufacturer, at no additional cost to the Owner or Buyer. Manufacturer shall provide and install additional or replacement equipment, parts, and labor (including cost of return trips to the site as needed), to correct deficiencies.

PART 2 - PRODUCTS

2.1 MANUFACTURERS

A. The following Manufacturers are named to establish a standard of quality necessary for the Project:

1. Baker Corp
2. Adler Tank
3. Rain For Rent
4. Del Tanks
5. Or approved equal

2.2 PERFORMANCE REQUIREMENTS

A. The Frac Tank criteria shall be as follows:

pH ADJUST TANKS	
Number of pH Adjust Tanks	8
Capacity	18,000 gallons, nominal (or greater)
Mixers required/application?	Yes/chemical addition and neutral-ization
Covered?	Yes
FLASH MIX TANK	
Number of Flash Mix Tanks	1
Capacity	18,000 gallons, nominal (or greater)

Mixers required/application?	Yes/chemical addition
Covered?	Yes
FILTER FEED TANK	
Number of Flash Mix Tanks	1
Capacity	18,000 gallons, nominal (or greater)
Mixers required/application?	No
Covered?	Yes
EFFLUENT MONITORING TANKS	
Number of Flash Mix Tanks	2
Capacity	18,000 gallons, nominal (or greater)
Mixers required/application?	Yes/chemical addition and neutral-ization
Covered?	No

Note 1: Motors shall be in accordance with requirements provided in Appendices.

B. Emphasis will be placed on the following criteria and objectives to evaluate Bids for the Frac Tanks:

1. With the short-term and long-term components to this project, and with the seven-month operational up-time per year for the short-term tanks, this project lends itself to some unique opportunities for purchasing/rental options. Vendor shall propose cost effective ways to optimize the Frac Tank purchasing strategy. Strategies such as the purchase of the Frac Tanks coupled with Vendor buy-back after project completion (estimated to be 4 years), or rental of tanks with decreased rental pricing for off-line months, etc. will be entertained. If actual conditions warrant the eventual purchase of these rented units, the accrued rental costs would then be applied towards the purchase of these units. Other strategies, as proposed by the Vendor with the Bid, are encouraged and will be evaluated.

C. Water constituents and concentrations are provided in Table 2 (provided as Appendix B to this specification).

D. Materials of Construction, Vessels – The material of construction for the interior of the tanks or coating system and any potentially wetted parts shall be selected by the Vendor to be compatible with constituents found in the water up to the combined maximum concentrations identified in Table 2 (see Appendix B to this specification). Note the water exhibits chlorides and organic compound solvent concentrations. When selecting materials of construction, the Vendor shall also consider the expected project lifespan of 4 years and select materials of construction accordingly, except for the Frac Tanks to be used in the long-term, heated building which are expected to remain operational for the long-term project life and as addressed by the alternative materials of construction described in Bid Item No. 2.

E. All vessels and equipment shall be designed to resist the design loads per the Building Code of New York State (BCNYS) 2007 edition, including sloshing effects resulting from a hydrodynamic and/or seismic analysis. Vessel/equipment support layout details,

including locations of anchor bolt holes, anchor bolt size and type, and embedment length shall be provided. Maximum Reaction Forces and moments at each anchor point shall be provided. The structural design criteria provided below for this site are preliminary, based on initial information available for the site, and are subject to change upon completion of a site geotechnical evaluation. Finalized structural design criteria will be provided prior to award of the Contract. Once finalized design criteria is provided, Vendor to certify that equipment design and anchoring is in compliance with the finalized structural design criteria. Draft structural design criteria are as follows:

SEISMIC DESIGN CRITERIA:	
Seismic Importance Factor, I_E	1.25
Seismic Use Group	II
Mapped Spectral Response Acceleration, S_S	0.192 g
Mapped Spectral Response Acceleration, S_1	0.078 g
5% Damped Spectral Response Acceleration at Short Periods, S_{DS}	0.32 g
5% Damped Spectral Response Acceleration at 1 sec Periods, S_{D1}	0.182 g
Seismic Design Category, SDC	C

F. The Frac Tanks will be placed on a former wastebed. As such, the soils are limited in the amount of weight they can support. The support structure (by Others) for the tanks will be designed to limit loading at floor contact points when full of water. Frac Tanks are to be installed on concrete pads or elevated cribbing. Vendor shall identify if continuous support is required beneath tanks, or if tanks can span between support locations (if timbers or concrete cribbing is used). Vendor to identify any concerns with planned support arrangement. Because of the properties of the soil, it is expected that potentially uneven settlement will occur. Assume the maximum acceptable settlement is as follows: less than 3/4” differential settlement across each tank and less than 1.5” of total overall settlement. Equipment Manufacturer shall identify the maximum acceptable differential settlement their unit can encounter without affecting the equipment or its operation.

G. The vessels shall be designed for atmospheric service (no pressure).

H. The Frac Tanks shall be equipped with nozzles, manways, downcomers, and all accessories as described herein and on the attached Nozzle Schedule drawings (see Appendix F to this specification). Manways shall be minimum 20” diameter, easy-open type, suitable for maintenance access on the top cover of each tank and a second manway on the sidewall with a minimum opening dimension of not less than 20” diameter. Alternative dimensions will be considered. Manways must be suitably sized to allow entry for inspection and repair of coatings and interior components. Manways shall be gasketed and flanged. Side manways shall be equipped with a davit hinge.

I. Access to the tops of the tanks and walkable tank covers shall be provided, as necessary, to enable routine maintenance and cleaning at the top of the covers. Handrails and guardrails shall comply with the attached Specification 05 52 13 – Pipe and Tube Railings. Manufacturer shall provide in the base bid pricing, the cost for top of tank access for each Frac Tank. If possible, (and as shown on the General Arrangement Drawing,) it would be preferred to share access between pairs of Frac Tanks grouped together (such as the pH Adjustment Tanks) such that the quantity of access ladders and handrailing is kept to a minimum. For example, in the General Arrangement Drawing equipment shown, each pair of pH Adjustment Tanks could have one (combined) ladder

for access to the top of the units and one handrail/guardrail system around the perimeter of both units together.

In addition, provide pricing for staircases in lieu of ladders as identified in the Bid Tab Items. Manufacturer is to indicate (and include pricing for) the recommended arrangement being proposed and clearly identify the number, size and location of handrails, walkable (portions of) tank covers, ladders or stairways, etc. Manufacturer shall propose a cost-effective means of providing necessary access without imposing unnecessary custom design components, if possible.

Locations of top nozzles, manways, and equipment or instrumentation located on the tops of tanks shall be grouped together as much as possible, and located outside of main walkable paths to avoid trip hazards for personnel walking on the tank covers.

J. Each Frac Tank shall be equipped with a minimum of four lifting lugs to facilitate lifting/rigging.

K. Nozzle sizes, locations and information are presented on the Tank Nozzle Schedule drawings (included in Appendix F to this specification.) Tanks which are covered will be designed to support live loads of 60 lbs per square foot and super-imposed equipment dead loads of 10 lbs per square foot, plus all mixer loads (i.e. vertical downward load, bending moment, static moment, torque, etc.). OSHA-approved 5,000 lb. tie-off points for personnel shall be included. Each of the covers shall be provided with load-rated manways.

L. For those tanks with mixers, tank manufacturer shall coordinate with engineer and/or mixer manufacturer to ensure that the tanks are designed to handle the loads imposed by the mixers. This coordination between the mixer manufacturer and the tank manufacturer is required regardless of whether the mixers are included in the scope of the tank manufacturer or not.

M. Mixers shall be constant speed. Motors shall be TENV or TEFC, 480 volt, three phase, 60 Hertz, with anticondensation heaters in accordance with Specification 26 05 13, “Electric Motors” (attached as Appendix G to this specification.)

N. Mixers General

1. The motors shall be designed in accordance with the requirements provided in the appendices herein.

2. The mixer Manufacturer shall be Lightnin, Chemineer, or approved equal.

3. The mixers shall be equipped with 316 stainless steel shafts and impellers, or approved alternate, as recommended by the Manufacturer.

4. Mixer blades shall be attached to shaft by keyways. Blades attached by set screws only are not acceptable.

O. The attached P&ID's show typical Frac Tank arrangements for each of the 4 types of tanks needed (pH Adjust Tanks, Flash Mix Tank, Filter Feed Tank, and Effluent Monitoring Tanks).

P. Electrical area hazard classification (interior and exterior of the Frac Tanks) is designated as ordinary.

Q. The Manufacturer shall conduct shop testing to satisfy hydraulic conditions of each tank. The Frac Tanks shall be hydrostatically leak tested by filling units at the Manufacturer's shop prior to delivery to the site. Certified test reports for each Frac Tank shall be provided prior to delivery.

R. The interiors of the Frac Tanks, equipment, piping, and all wetted ancillaries are to be constructed of materials that are compatible with the water characteristics provided in Table 2. Note the water exhibits chlorides and organic compound solvent concentrations.

S. All tanks, equipment items, valves, and instruments shall be provided with stainless steel tags. Tags shall be permanently affixed or chained to the item, and will indicate the tag number and description of the item as shown on the P&IDs. Lettering on the tag shall be etched or struck, with a minimum letter height of 0.5 inches.

T. Vendor shall identify any issues that may result from a prolonged shutdown and what time interval it would be expected that the issues may occur at.

U. All tank nozzles shall be provided with flanges designed in accordance with ASME B16.5, 150# flanges. Nozzle projections shall be of sufficient lengths to allow access to flange bolts and nuts

V. Manufacturer shall provide pricing for one spare for each different type of mixer provided.

W. Any stainless steel bolts shall be applied with anti-seize thread lubricant.

2.3 SHOP FINISHES

A. All surfaces to be coated shall be prepared in accordance with PIP VESV1003HA and Honeywell's associated overlay document associated with the PIP specification. Surface preparation prior to coating application shall be in accordance with the NACE standard SP0178 and NACE SP0178 Appendix C NACE Weld Preparation Designation C, and coating Manufacturer's instructions, whichever is more stringent.

B. The Manufacturer shall provide a shop applied protective coating system for all interior metal surfaces of the Frac Tanks system in accordance with coating system manufacturer recommendations. The interior linings of the Frac Tanks shall be compatible with the influent parameters and concentrations presented in this specification. Coal tar epoxy is not an acceptable interior lining. Proposed coating and lining systems and dry film

thickness (DFT) of each coat and of the overall coating system proposed shall be provided with the Bid. Stainless steel does not require coating. Cathodic protection may be used for supplemental corrosion resistance, if recommended by the Manufacturer.

C. The Manufacturer shall provide a shop-applied protective coating system (primer and suitable top coat(s)) for all exterior metal surfaces.

2.4 SOURCE QUALITY CONTROL

A. Factory Test

1. Each Frac Tank shall be factory tested as follows:

a. Manufacturer's standard inspections and tests
b. Hydrostatically tested by the Manufacturer at the shop prior to delivery to the site. Notice shall be given to the Engineer at least two weeks prior to hydrostatically testing the equipment, so that arrangements can be made for Engineer and/or other Owner's Representative(s) to witness the testing at the Manufacturer's facility.
c. Testing of interior coating systems per NACE standards SP0188 and SP0178.

2. Submit factory test reports for approval prior to shipment.

PART 3 - EXECUTION

3.1 INSTALLATION

A. Installation is by others. Installation shall be per Manufacturer's instructions.

3.2 MANUFACTURER'S SERVICES

A. If mixers are provided by the Frac Tank Successful Bidder, the on-site services of the Manufacturer's field representative shall be provided during the start-up and adjustment in accordance with this specification and as identified in the Bid Documents.

B. The services of the Manufacturer's representative shall be provided during installation. The Manufacturer's representative is not required to be on-site during installation efforts, but will be conferred if problems or questions occur during installation. Assume 4 hours for mixer installation assistance and 2 hours for Frac Tanks installation assistance.

C. A factory-authorized service representative will perform the following inspections, checks, and start-up assistance per Section 3.3.B:

1. Inspect field-assembled components, equipment installation, and electrical connections for compliance with the Manufacturer's installation recommendations and requirements.

2. Set field-adjustable settings to the values recommended by the equipment Manufacturer.

3. Test and adjust controls and safety devices. Replace damaged and malfunctioning controls and components.

4. Perform or supervise start-up services.

5. Prepare written report to record the following:

   a. Inspections and checks carried out on-site.

3.3 DEMONSTRATION AND TRAINING

A. If mixers are provided by the Frac Tank Successful Bidder, engage a factory-authorized service representative to train Owner's maintenance personnel to adjust, operate, and maintain the equipment.

1. Review data in Operation and Maintenance manuals.

2. Schedule training with Owner or Engineer, with at least two weeks advance notice.

B. If mixers are provided by the Frac Tank Successful Bidder, the services of the Manufacturer’s representative shall be provided within one site visit for the minimum hours as listed below:

1. Thirty-Six hours for inspection, certification of installation and start-up assistance.

2. Four hours for training Owner’s personnel.

Manufacturer shall advise if the amount of hours specified are reasonable or provide the number of hours recommended if different than what is allotted above

PART 4 - APPENDICES

A. Table 1 – Frac Tank Submittal Schedule

B. Table 2 – Constituent Concentrations

C. Tank Data Sheets

D. P&ID’s

1. Lead Sheets
2. I-01 pH Adjustment Tank #1
3. I-02 pH Adjustment Tank #2
4. I-03 Flash Mix Tank #1
5. I-07 Filter Feed Tank

6. I-10 Effluent Monitoring Tank #1
7. I-10B Effluent Monitoring Tank #2

E. General Arrangement Plan – GA-01

F. Nozzle Schedule Drawings

1. M-12 Flash Mix Tank #1 Nozzle Schedule
2. M-14 pH Adjust Tank #1 Nozzle Schedule
3. M-15 Filter Feed Tank Nozzle Schedule
4. M-16 Effluent Monitoring Tank #1 Nozzle Schedule
5. M-17 Effluent Monitoring Tank #2 Nozzle Schedule

G. Specification 26 05 13, "Electric Motors"

H. Specification 05 52 13 – "Pipe and Tube Railings"

I. Honeywell overlay document

1. Process Industry Practices (PIP) Standard VESV1003
2. Honeywell Specification MSL-2002 HW ***(not applicable for this contract)***

J. NACE SPO178-2007 - Design, Fabrication, and Surface Finish Practices for Tanks and Vessels to Be Lined for Immersion Service

K. NACE SPO188-2006 - Discontinuity (Holiday) Testing of New Protective Coatings on Conductive Substrates

END OF SECTION

SECTION 44 43 13.26

MULTIMEDIA FILTRATION PRE-PURCHASE SPECIFICATION

PART 1 - GENERAL

1.1 SUMMARY

A. This Section includes the equipment and associated controls associated with the skid-mounted Multimedia Filter (MMF) system as shown on the Contract Drawings. Refer to the attached Process and Instrumentation Drawing (P&ID) for an example schematic of the system. The space allocated for the system is as shown on the General Arrangement Plan (attached as Appendix E to this specification). The general scope of the work is to furnish, deliver, and provide start-up assistance for the MMF system, so that a complete system successfully performs as designed.

1. The equipment shall include filter vessels, filter media support, filter media, underdrain, inlet distributor, backwash system, electrical and instrumentation termination panels, air scour system, valve manifold with control and manual valves, and all required accessories for a completely assembled, ready to install system.

2. The filtration system will be one component of a water treatment train, designed to remove solids, metals, and organic compounds. The filtration component will be designed to remove residual suspended solids from a clarifier effluent stream.

3. The filtration system shall be delivered FOB project site to 522 Gere Lock Road, Syracuse, NY 13209.

B. The information provided is based upon four horizontal type Multimedia Filters. The type, size and quantity of these MMF units are what were used to develop the design basis for this project. However, the intent is to specify performance-based equipment. Quantities, sizes and types are all subject to change based upon the equipment manufacturer's compliance to the performance criteria described herein. Manufacturers shall consider alternate equipment, as needed, to optimize the design to propose more cost effective alternatives. As such, vertical MMF units, or other differences will be acceptable and will be considered. Any requests in this RFP which, in the Vendor's opinion, impart unnecessary costs or unnecessarily differ from Manufacturer's standard offerings should be clearly identified in Bidder's proposal.

C. The system is planned to be installed (by others) inside a structure at the Owner's facility and operated approximately seven months out of each year (April 15th through November 15th) for four years beginning in the year 2012. In addition to the short-term (4-year) treatment trains, a long-term treatment train (which includes a MMF component) will also be operated at the same Owner's facility. This long-term treatment train will be designed to treat a much lower flow rate. The long-term MMF unit will treat the same water (contains the same constituents at the same concentrations as shown on Table 2 provided in Appendix B to this specification) but at a maximum flow rate of 500 gpm,

and for an expected operational lifespan of 20 years. The Manufacturer shall select equipment such that appropriately-sized MMF unit(s) is shared between the "short-term" and the "long-term" treatment trains (i.e. serving as a part of the short-term MMF system during the seven months of "summer" operation and then used as part of the lower-flow, long-term system during the winter months for the first four years and year-round after year 4). The long-term system will be in a heated space.

Even though the short-term equipment will be located inside a structure, the structure is not heated and therefore the units are subject to freezing during the non-operational winter months. Manufacturer shall identify required means, methods and procedures needed to prepare units for storage over the winter months.

D. Start-up services shall be provided. Provide a factory representative for up to 40 hours of field start-up assistance at the Owner's facility.

E. The equipment shall fit within the footprint allocated as shown on the General Arrangement Drawing GA-01 provided herein. Manufacturer shall identify any operational or maintenance clearances required with the Bid. The equipment will need to fit through the building's overhead door which has dimensions of 14 feet x 18 feet. The building will be new construction. Manufacturer shall advise if a larger overhead door opening is required. Manufacturer is to confirm that the equipment can enter the building via the overhead door and be moved to the positions shown on drawing GA-01. The clear height at the building eave is estimated at 18'-0". Additional clear height is available between roof support members.

1.2 REFERENCES

A. Comply with the latest revision of the following codes, standards and specifications, except where more stringent requirements have been specified herein:

1. American Society for Testing and Materials (ASTM)
2. American National Standards Institute (ANSI)
3. American Society of Mechanical Engineers (ASME)
4. NACE International
5. National Electric Code (NEC)

1.3 COORDINATION REQUIREMENTS

A. Coordinate delivery with project schedule as maintained by Construction Supervisor.

B. Coordinate with Engineer and Control System Integrator for controls integration.

C. Bid Review Meeting: Following the Engineer's review of the proposal, a bid review meeting will be held in Syracuse, NY.

D. Scheduling: The MMF system must be operational before April 2012. Refer to RFP Section IV "Information" Schedule Milestones Table for schedule dates.

1.4 SUBMITTALS

A. Prepare and provide drawings and submittals specific to this system in accordance with the requirements shown on Table 1 (provided as Appendix A to this specification).

B. Product Data Submittals: "Catalog cuts" and spec sheets included as submittals shall be marked to specifically indicate the equipment and materials proposed for this project. Indicate selections with arrows, and cross out irrelevant data.

C. Operation and Maintenance Data

1. Presentation of Submittals

a. Operational and Maintenance Manuals (3 hard copies each in a 3-ring binder and 1 electronic copy). Owner's name, address, equipment serial numbers, and model numbers shall be clearly identified on the cover. Include Manufacturer and local service representative contact information, including phone numbers and e-mail addresses, on the cover.
b. Each manual shall include a table of contents, an index, and sequential section dividers separating equipment information into subsections. Each manual shall incorporate, at a minimum, the following: field installation instructions, operation description including each mode of operation (i.e. normal flow-through, backwash and air scour modes), written description of the equipment and corresponding components, starting and stopping procedures, routine maintenance procedures, procedures for protecting the equipment during short-term and long-term downtime, schedules, parts lists, troubleshooting topics, illustrations and diagrams and safety instructions for operating personnel.
c. Each manual shall include any other information that is required by maintenance personnel for proper operation and maintenance.
d. Electronic files of the complete operation and maintenance manual are to be provided on CD.

1.5 QUALITY ASSURANCE

A. Qualifications

1. Manufacturer to provide description of relevant past experience providing MMF systems. Especially of interest is past experience with projects where MMF units were used to clarify water from dredging operations or surface water clean-up projects. Manufacturer shall provide a list of references and contact information.

2. Seismic Design Engineer Qualifications: A professional engineer who is legally qualified to practice in the jurisdiction where Project is located and who is

experienced in providing structural and seismic engineering services, including the design of seismic restraints.

3. Owner or Owner's Representative will be conducting scheduled visits to Manufacturer's facilities during fabrication and/or Manufacturer's shop testing procedures.

1.6 DELIVERY, STORAGE AND HANDLING

A. As required, disassemble and deliver MMF system in the minimum number of pieces.

B. Site access is via a one-way access road, parts of which are steeply graded. Equipment vendor to ensure adequate means of delivery are provided to enable delivery to the site. A site visit prior to delivery is recommended.

C. Materials and equipment shall be boxed, crated or otherwise completely protected during shipment, delivery, storage and handling. Such boxes, crates or protection shall be clearly labeled with the Manufacturer's and Owner's name, site address, project equipment tag numbers, brand or model.

D. Ship, deliver, store and handle to prevent damage and in accordance with Manufacturer's written instructions. Provide factory-installed lifting provisions.

E. The MMF system shall be delivered freight on board (FOB) to the project site.

F. Media shall not be delivered or installed until approximately three weeks prior to the initiation of operational commissioning at the site (assume operational commission begins April 30, 2012).

G. Manufacturer's storage requirements shall be provided. Units will be stored outside and unprotected from weather events for a prolonged period of time prior to installation. Manufacturer shall provide adequate packaging and protection so as to prevent damage under these conditions.

H. Off-loading of equipment delivered to the site is by Others.

1.7 WARRANTY

A. Provide parts and labor warranty in accordance with the Purchase Order General Terms and Conditions, and the Supplemental Terms and Conditions.

B. The standard warranty duration shall be from delivery date of units to one year after start-up. Start-up is defined as the initiation of operational commissioning (assume start-up to begin on April 30, 2012). Provide with the Bid the cost adder to extend the warranty for 42 months after start-up, as described in the Bid Tab document. The standard warranty shall include parts and labor for all supplied items, including but not limited to, equipment, controls, and coating system.

1.8 PERFORMANCE GUARANTEE

A. Performance shall be warrantied and proven. Performance shall be demonstrated continuously for four weeks after start-up under full operating conditions. Performance testing is by others. MMF Manufacturer's Representative shall be present at the site to witness a portion of the performance testing, per Section 3.5.B.2, and provide input as requested. The MMF system shall be designed to achieve effluent concentrations, given the maximum influent concentrations provided on Table 2. Performance shall be warrantied over the entire range of flow rates. Anticipated maximum influent and required effluent concentrations, and minimum and maximum flow rates for the system are provided in Table 2. If the equipment fails to continuously meet this effluent quality, the Manufacturer shall, at no additional cost to the Owner or Buyer, provide and install additional or replacement equipment, parts, and labor (including cost of return trips to the site as needed) to correct demonstrated performance deficiencies as needed to achieve the required performance.

B. Process: the provided system shall achieve an effluent TSS concentration of 5 mg/L or less. The design value for TSS concentration of the influent water is as shown on Table 2. If the influent TSS concentration exceeds the design value, than 90% removal is required. If the equipment fails to continuously meet this effluent quality, the Manufacturer shall, at no additional cost to the Owner or Buyer, provide and install additional or replacement equipment, parts and labor to correct demonstrated performance deficiencies as needed to achieve the required performance.

PART 2 - PRODUCTS

2.1 MANUFACTURERS

A. The following manufacturers are named to establish a standard quality necessary for the Project:

1. General Electric
2. Siemens
3. Graver
4. Yardney
5. WesTech
6. TIGG
7. Or approved equal

2.2 PERFORMANCE REQUIREMENTS

A. The MMF system shall be suitable for filtration of suspended solids from the water under the design influent specified herein to the effluent concentrations specified herein. The MMF vessels shall be backwashable, capable of automatic or hand operation.

B. The MMF system criteria shall be as follows:

Application	Filtration of suspended solids
Materials of construction, tanks	Manufacturer to provide
Filter Media	Sand, anthracite and gamet (or alternate, as recommended by the Manufacturer)
Acceptable surface loading rate	4-6 gpm/sf @ maximum gpm is what was used for design basis. However, Manufacturer shall make recommendation.

C. Water influent and acceptable effluent constituents and their respective concentrations are provided in the attached Table 2. Manufacturer shall size filters to handle the peak flow rate as provided in Table 2 and to reach effluent TSS limits. Manufacturer shall identify proposed surface loading rate at maximum flow rate. Sizing and design of filters shall be based on normal operation with Vendor to select number of MMF units based on maximum full flow with a redundant on-line spare MMF unit also being provided. The design intent is that the on-line spare will be in "standby" mode until one of the operating units initiates a backwash. At that point, the vessel to be backwashed will be taken off-line to be backwashed while the forward flow is redirected to the redundant unit. Once the backwash is complete, that unit would be kept in "standby" mode until another unit requires backwashing. At that time, the "standby" vessel will again be put back into service accepting forward flow.

D. The MMF's shall be designed to remove total suspended solids (TSS) from the influent. Removal of TSS shall be as follows:

1. Influent TSS of >5 mg/L to 50 mg/L requires TSS removal to 5 mg/L or less in MMF effluent.
2. Influent TSS >50 mg/L requires 90% TSS removal in MMF effluent.

E. Materials of construction for the interiors of the MMF vessels, equipment, piping, and all wetted ancillaries shall be selected by the Vendor to be compatible with constituents found in the water at the combined maximum concentrations identified herein (see Table 2). Note the water exhibits chlorides and organic compound solvent concentrations. When selecting materials of construction, the Vendor shall also consider the expected project lifespan of 4 years and potential buy-back option after completion of the anticipated 4-year term, and select materials of construction accordingly, except for the "shared" unit(s) that is expected to remain operational for the long-term project life and as addressed by the alternative materials of construction described in the Bid Tab Items.

F. All units and equipment shall be designed to resist the design loads per the Building Code of New York State (BCNYS) 2007 edition, including sloshing effects resulting from a hydrodynamic and/or seismic analysis. Vessel/equipment support layout details, including locations of anchor bolt holes, anchor bolt size and type, and embedment length shall be provided. Maximum Reaction Forces and moments at each anchor point shall be provided. The structural design criteria provided below for this site are preliminary, based on initial information available for the site, and are subject to change upon completion of a site geotechnical evaluation. Finalized structural design criteria will be provided prior to award of purchase order. Once finalized design criteria is provided,

Vendor to certify that equipment design and anchoring is in compliance with the finalized structural design criteria. Draft structural design criteria are as follows:

SEISMIC DESIGN CRITERIA:

Seismic Importance Factor, I_E	1.25
Seismic Use Group	II
Mapped Spectral Response Acceleration, S_S	0.192 g
Mapped Spectral Response Acceleration, S_1	0.078 g
5% Damped Spectral Response Acceleration at Short Periods, S_{DS}	0.32 g
5% Damped Spectral Response Acceleration at 1 sec Periods, S_{D1}	0.182 g
Seismic Design Category, SDC	C

G. The MMF units will be placed on a former wastebed. As such, the soils are limited in the amount of weight they can support. Units must be designed to limit loading to less than 1,500 pounds per square foot at floor contact points when full of media and water, or just water, whichever is heaviest. Skid mounting of the equipment may be necessary to achieve this acceptable loading. Manufacturer shall advise in Bid. MMF skids are to be installed on either timber mats or concrete pads. Vendor to identify any concerns with planned support arrangement (i.e. embedment into timber mats, etc.). Because of the properties of the soil, it is expected that potentially uneven settlement will occur. Assume the maximum acceptable settlement is as follows: less than 3/4" differential settlement across each unit and less than 1.5" of total overall settlement. Equipment Manufacturer shall identify the maximum acceptable differential settlement their unit can encounter without affecting the equipment or its operation. Means to relevel shall be provided.

H. The vessels shall be designed for a pressure of 100 psig or 1.3 times the peak pressure during the backwash cycle, whichever is greater. The vessels shall be designed and fabricated in accordance with the ASME boiler and unfired pressure vessel code. ASME code stamp is required.

I. Manufacturer shall identify minimum flow rate into the individual MMF's that will still allow for proper treatment and operational performance. Manufacturer shall identify minimum and maximum acceptable hydraulic flow for each unit and provide this information with the Bid.

J. Instrumentation and components shall be sized per Manufacturer's recommendations and shall comply with Specification 16900 – Instrumentation and Controls Requirements. Each filter tank shall be equipped with the following features:

1. Automatic air release/vacuum valve – valve shall be sized to automatically relieve air as vessel is filling with water and introduce air as vessel is draining.

2. Inlet and outlet pressure gauges with diaphragm seals.

3. Differential pressure indicating transmitter – Differential pressure will be continuously monitored across each MMF. Transmitter shall have diaphragm seals on each leg. An operator-adjustable set point will indicate when initiation of a backwash is warranted. High differential pressure across an MMF vessel

shall automatically close an electrically-operated flow valve on the influent of the MMF and open a valve on the idle MMF unit to redirect flow to the stand-by MMF. Control of this function is via Owner-provided Distributed Control System (DCS).

4. Inlet and outlet sample taps.

5. Top and side manways – a minimum 14” x 18”, easy-open type manway suitable for maintenance access on the top of each vessel and a second manway on the sidewall with a minimum opening dimension of not less than 20” diameter shall be provided. Manways must be suitably sized to allow entry for inspection and repair of coatings and interior components. Manways shall comply with ASME boiler and unfired pressure vessel code. Manways shall be flanged. Side manways shall be equipped with a davit hinge.

6. Rupture disk (or other Engineer-approved device) – over pressurization protection shall consist of a standard rupture disk designed for bursting pressure of 95% (+/- 5%) of the design pressure rating of the vessel. The rupture disk shall be equipped with a tell-tale device which alerts the Operator (via an alarm to the DCS) that the disk has ruptured. The rupture disk will be interlocked to shut the feed valve (valve by MMF vendor) to the MMF system upon rupturing. The rupture disk shall be in compliance with ASME code requirements. Three spare rupture disks shall be provided for the complete MMF system.

7. Sight flow indicator tube – A sight flow indicator shall be provided on the backwash waste line of each MMF. The sight tube shall consist of a 2 foot long (minimum) section of transparent rigid pipe or other Engineer-approved design. Manufacturer shall confirm feasibility of using transparent rigid pipe with air scouring.

8. Vent – An adequately-sized vent with an automatic electrically-actuated flow valve shall be provided to permit exhaust of air when unit is in air scour mode.

9. Air scour feature – MMF vessels shall be required to undergo automatic air scour step with each backwash. Compressed air is available and will be provided by others. MMF Manufacturer shall identify compressed air requirements including required quality of air, flow rate, pressure, pressure drop (through Vendor-provided system), connection(s) sizes and types, duration of air scour step, and volume of air required. A description of operation of the MMF, including the air scour step, shall be provided. MMF Vendor to advise of benefits to air scour.

10. Drain with isolation valve – As part of the air scour feature, it is anticipated that a gravity drain down will be required prior to initiation of air scouring. An adequately-sized drain with an automatic electrically-actuated flow valve shall be provided by the Vendor to permit the vessel to automatically gravity drain. Drain down valve shall include an open and closed limit switch to shut drain down valve upon high level in the receiving sump or tank. In addition, MMF’s shall be equipped with a manual drain with isolation valve to enable manual draining of each MMF for maintenance purposes.

K. The vessel internal filter inlet and outlet distribution configurations shall be designed to provide uniform distribution of flow at any flow range between the minimum and maximum flow rates specified herein.

L. The underdrain system shall be capable of supporting the media when the vessel is filled with water and media and pressured to the system design pressure.

M. Each unit shall be equipped with lifting lugs to facilitate lifting/rigging.

N. Each filter shall be equipped with media loading and clean-out ports.

O. The filter tanks shall be fitted with electrically actuated control valves to accomplish backwash and to isolate the operating filters during backwash of the redundant unit. Valves shall be Manufacturer's standard if they are suitable for expected concentrations of constituents found in the water. Valves 8 inches and larger shall be equipped with a gear operator. Each valve shall be provided with two limit switches (open and closed). Any manually operated valves located higher than 6 feet shall be equipped with a chain operator.

P. MMF vessels shall have provisions for a fully automatic water backwash of each individual MMF vessel. The source of backwash water shall be from an external treated water source (by others) unless it is possible to use forward flow from other MMF's (or other chambers of same MMF, if feasible) as the source of backwash water. It is preferred to use the treated water from MMF's as the backwash water source. Manufacturer shall identify requirements (i.e. acceptable water source and water properties, volume, required pressure, duration, flow rate, pressure drop, connection sizes/locations/types, etc.) Manufacturer shall minimize the amount of backwash water required. A complete and detailed description of the backwash/air scour process shall be provided with the Bid that provides a step-by-step, sequential description of the process. Instrumentation and actuated valves provided shall comply with Specification 16900 Instrument and Controls Requirements. Control valves shall be electrically actuated. Backwash may be automatically initiated upon:

1. High differential pressure, or

2. Timer, or

3. High discharge turbidity, or

4. Manually, at the Operator Interface Terminal (OIT)

A pressure differential transmitter shall be provided to allow initiation of backwash of a MMF upon exceedance of a pre-set, operator-adjustable pressure differential. A turbidimeter on the effluent piping from the filters will be provided by Others, with filter backwash possibly initiated at a pre-set turbidity value (operator-adjustable set point). A time clock controller shall be provided at DCS (by others) which is capable of being set to backwash each filter at a pre-set time each day, or any selection of days in a 14 day

cycle, or to skip a day or several days. A manual override to permit manual initiation of backwashing shall also be provided.

Q. The Manufacturer shall provide MMF media that meets the design requirements. The type, properties and depth of media shall be identified by the Manufacturer with the Bid. Information provided shall include media material identification, gradation and sizing.

R. The attached P&ID I-08 is for a typical horizontal, pressure-type MMF system. The P&ID is to be used only as an example of filtration functionality. Alternate filtration systems may be considered.

S. The automatic controls and alarms associated with the MMF system are to be integrated into a DCS. Programming and hardware associated with the DCS is by others. The Manufacturer is required to provide a detailed control description along with other supporting documents as specified in Section 16900 "Instrumentation and Controls Requirements." All instruments shall be installed and wired back to electrical and instrumentation terminal strip boxes (NEMA 4) by the Manufacturer. One terminal box strip shall be provided for each MMF. All instrumentation and controls shall be as specified in Section 16900 "Instrumentation and Controls Requirements" (no exceptions).

T. Manufacturer shall recommend alarm and shutdown conditions, as appropriate. Alarms shall have a sufficient programmable time delay to minimize nuisance alarms and system shutdowns. Interlocks will be incorporated in the DCS to prevent:

1. Initiation of backwash while any other MMF vessel is backwashing

2. Initiation of backwash on high water level in the collection vessel accepting spent backwash water

3. Initiation of backwash on a low water level in the backwash water source tank (if applicable)

U. Electrical area hazard classification (interior and exterior of the MMF's) is designated as ordinary.

V. All tanks, equipment items, valves, and instruments shall be provided with stainless steel tags. Tags shall be permanently affixed or chained to the item, and will indicate the tag number and description of the item as shown on the P&ID (e.g., MMF-0801 – Multimedia Filter # 1). Lettering on the tag shall be etched or struck, with a minimum letter height of 0.5 inches.

W. Vendor shall identify any issues that may result from a prolonged shutdown and what time interval it would be expected that the issues may occur at.

X. All interconnecting piping between the individual MMF vessels of the MMF system shall be provided by others. The piping from each vessel to its associated valve manifold is by MMF Vendor, as shown on P&ID's (see Appendix D to this specification).

Y. All MMF system nozzles shall be provided with flanges designed in accordance with ASME B16.5, 150# flanges. Nozzle projections shall be of sufficient lengths to allow access to flange bolts and nuts.

Z. Although polymer is not envisioned to be added, the potential exists that it may be used in the future. If polymer builds up on the filtration media, a mechanism must be provided to remove polymer (e.g., chemical cleaning). Manufacturer is to advise suitability of acid cleaning and/or identify other acceptable or recommended means for polymer removal.

AA. Calcium scale is experienced at the site. Manufacturer is to advise suitability of acid cleaning and/or identify other acceptable or recommended means for scale removal.

BB. Any stainless steel bolts shall be applied with anti-seize thread lubricant.

2.3 SHOP FINISHES

A. All surfaces to be coated shall be prepared in accordance with PIP VESV1003HA and Honeywell's associated overlay document associated with the PIP specification. Surface preparation prior to coating application shall be in accordance with the NACE standard SP0178 and NACE SP0178 Appendix C NACE Weld Preparation Designation C, and coating Manufacturer's instructions, whichever is more stringent.

B. The Manufacturer shall provide a shop applied protective coating system for all wetted metal surfaces of the MMF vessel package. The interior linings of the vessels shall be compatible with the influent parameters and concentrations presented in this specification as well as potential cleaning chemicals (to remove polymer and scale build-up) and shall be abrasion resistant for this intended use. Coal tar epoxy is not an acceptable interior lining. Proposed coating and lining systems and dry film thickness (DFT) of each coat and of the overall coating system proposed shall be provided. Stainless steel does not require coating. Cathodic protection may be used for supplemental corrosion resistance, as recommended by the Manufacturer and at no additional cost.

C. The Manufacturer shall provide a shop-applied protective coating system (primer and suitable top coat(s)) for all non-wetted metal surfaces of the MMF system.

2.4 SOURCE QUALITY CONTROL

A. Factory Assembly

1. Owner or Owner's Representative reserves the right to visit Manufacturer's factory during fabrication to witness progress and fabrication.

B. Factory Test

1. Each MMF unit shall be factory tested as follows:
   a. Manufacturer's standard inspections and tests

b. Hydrostatically tested by the Manufacturer at the shop prior to delivery to the site. Notice shall be given to the Engineer at least two weeks prior to hydrostatically testing of fully assembled equipment, so that arrangements can be made for Engineer or other Owner's Representative to witness the testing at the Manufacturer's facility.
c. Testing of interior coating systems per NACE standards SP0188 and SP0178.

2. Submit factory test report for approval prior to shipment.

PART 3 - EXECUTION

3.1 EXAMINATION

A. As part of on-site start-up services, Manufacturer's representative shall examine areas and conditions for compliance with Manufacturer's installation recommendations and requirements.

B. Proceed with start-up only after unsatisfactory conditions have been corrected.

3.2 INSTALLATION

A. Installation is by others. Installation shall be per Manufacturer's instructions.

B. The MMF system shall fit and be serviceable in the allocated space as shown on the General Arrangement Plan (Drawing GA-01). If an alternate system can be proposed that would require less space, it will be considered an advantage. Dimensions of building access doors and overhead clearances were provided previously herein.

3.3 FIELD QUALITY CONTROL

A. The Manufacturer shall furnish the services of a Manufacturer's representative to inspect the installation (by others) and to provide start-up services for the units.

3.4 MANUFACTURER'S FIELD SERVICES

A. The on-site services of the Manufacturer's field representative shall be provided during the start-up and adjustment in accordance with this specification and as identified in the Bid Documents.

B. The services of the Manufacturer's field representative shall be provided during installation. The Manufacturer's field representative is not required to be on-site during installation efforts, but will be conferred if problems or questions occur during installation.

C. A factory-authorized service representative shall perform the following inspections and checks:

1. Inspect field-assembled components, equipment installation, and electrical connections for compliance with the Manufacturer's installation recommendations and requirements.

2. Set field-adjustable settings to the values provided by the equipment Manufacturer.

3. Test and adjust Vendor-provided controls and safety devices. Replace damaged and malfunctioning instrumentation and components.

4. Witness and provide input as requested during on-site performance tests (testing to be performed by others).

5. Perform or supervise start-up services.

6. Prepare written report to record the following:

   a. Inspections and checks carried out on site
   b. Test procedures used to test controls and instrumentation
   c. Test results that comply with requirements for controls and instrumentation
   d. Test results that do not comply with requirements and corrective action taken to achieve compliance with requirements for controls and instrumentation.

3.5 DEMONSTRATION AND TRAINING

A. Engage a factory-authorized service representative to train Owner's maintenance personnel to adjust, operate, and maintain the equipment.

1. Review data in Operation and Maintenance manuals.

2. Schedule training with Owner or Engineer, with at least two weeks advance notice.

B. The services of the Manufacturer's representative shall be provided as separate visits, if required, for the minimum hours as listed below for the MMF system:

1. Twenty-Eight hours for inspection, certification of installation and start-up.

2. Eight hours of site presence during performance testing.

3. Four hours on-site for the owner's personnel training.

Vendor shall advise if the amount of hours specified are reasonable or provide the number of hours recommended if different than what is allotted above.

PART 4 - APPENDICES

A. Table 1 – MMF Submittal Schedule

B. Table 2 – Constituent Concentrations

C. Process Flow Diagram – PFD-1

D. P&ID Lead Sheets and I-08 Multimedia Filter

E. General Arrangement Plan – GA-01

F. Treatability Test Results

G. Specification 16900 - Instrumentation and Controls Requirements

H. Honeywell overlay document

1. Process Industry Practices (PIP) Standard VESV1003

2. Honeywell Specification MSL-2002 HW ***(not applicable for this contract)***

I. NACE SPO178-2007 - Design, Fabrication, and Surface Finish Practices for Tanks and Vessels to Be Lined for Immersion Service

J. NACE SPO188-2006 - Discontinuity (Holiday) Testing of New Protective Coatings on Conductive Substrates

END OF SECTION

SECTION 44 43 13.29

GRANULAR ACTIVATED CARBON SYSTEM PRE-PURCHASE SPECIFICATION

PART 1 - GENERAL

1.1 SUMMARY

A. This Section includes work consisting of furnishing, delivering and providing start-up and operational change-out services for a liquid-phase granular activated carbon (GAC) system as shown on the Site Plan and Process and Instrumentation (P&ID) drawings.

1. The equipment shall include skid-mounted, backwashable GAC vessels, carbon, interconnecting piping, manual valves, distribution and collection laterals, and accessories and controls for a completely assembled, ready to install and operate system.

2. The GAC system will be one component of a water treatment system designed to remove metals, and organic compounds. The GAC system will be designed to remove volatile and semi-volatile organic compounds from an effluent stream of a polishing filter system.

3. The GAC system shall be delivered FOB project site to 522 Gere Lock Road, Syracuse, NY 13209.

B. The system is planned to be installed (by others) inside a structure at the Owner's facility and operated approximately seven months out of each year (April 15th through November 15th) for four years beginning in the year 2012. In addition to the short-term (4-year) treatment trains, a long-term treatment train (which includes a GAC component) will also be operated at the same Owner's facility. This long-term treatment train will be designed to treat a much lower flow rate. The long-term GAC unit will treat the same water (contains the same constituents at the same concentrations as shown on Table 2) but at a maximum flow rate of 500 gpm, and for an expected operational lifespan of 20 years. The Manufacturer shall select equipment such that one appropriately-sized GAC lead/lag unit is shared between the "short-term" and the "long-term" treatment trains (i.e. serving as a part of the short-term GAC system during the seven months of "summer" operation and then used as part of the lower-flow, long-term system during the winter months for the first four years and year-round after year 4). The long-term system will be in a heated space.

Even though the short-term equipment will be located inside a structure, the structure is not heated and therefore the short-term units are subject to freezing during winter months. Vendor shall identify required means, methods and procedures needed to prepare units for storage over the winter months. As part of the Service Contract described in the Bid Tab Items, Vendor will be responsible for filling units, and bringing system on-line and fully operational each year prior to April 15th, and emptying/removal of carbon (if required) and rendering system safe for winter downtime/storage immediately after the November 15th yearly shutdown.

C. Start-up services shall be provided. Provide a factory representative for up to 40 hours of field start-up assistance at the Owner's facility.

D. Provide a maintenance/service contract for operational change-out services on an annual basis. Treatability testing conducted on the water estimates that lead GAC units will need to be changed out approximately once every month. Due to the quantity of GAC units required to treat the volume of water, and in order to maintain design flow rate requirements, GAC change-outs will need to be staggered such that only one pair can be off-line at a given time. However, it is up to the Manufacturer to appropriately size the equipment hydraulically and estimate change-out frequency based upon criteria (maximum influent and effluent concentrations) presented herein. It is assumed that spent carbon would need to be classified as Hazardous.

E. The equipment shall fit within the footprint allocated as shown on the General Arrangement Drawing GA-01 provided herein. The equipment will need to fit through the building's overhead door which has minimum dimensions of 16 feet x 16 feet. The building will be new construction. Vendor shall advise if a larger overhead door opening is required. The clear height at the building eave is estimated at 18'-0". At the planned location of the GAC's, the clear height is approximately 20'-6". Additional clear height is available between roof support members.

1.2 REFERENCES

A. Comply with the latest revision of the following codes, standards and specifications, except where more stringent requirements have been specified herein:

1. American Society of Mechanical Engineers (ASME)
2. American Society for Testing and Materials (ASTM)
3. American National Standards Institute (ANSI)
4. NACE International
5. National Electric Code

1.3 COORDINATION REQUIREMENTS

A. Coordinate delivery with project schedule as maintained by Construction Supervisor.

B. Coordinate with Engineer and Control System Integrator for controls integration.

C. Bid Review Meeting: Following the Engineer's review of the proposal, a bid review meeting will be held in Syracuse, NY.

D. Scheduling: The GAC system must be operational before April 2012. To allow adequate time for installation (by others), the equipment must arrive on-site no later than April 20, 2011.

1.4 SUBMITTALS

A. Prepare and provide drawings and submittals specific to this system in accordance with the requirements shown on Table 1 herein.

B. Product Data Submittals: “Catalog cuts” and spec sheets included as submittals shall be marked to specifically indicate the equipment and materials proposed for this project. Indicate selections with arrows, and cross out irrelevant data.

C. Presentation of Submittals

1. Operation and Maintenance Data

a. Operational and Maintenance Manuals (3 hard copies each in a 3-ring binder and 1 electronic copy). Owner’s name, address, equipment serial numbers, and model numbers shall be clearly identified on the cover. Include Manufacturer and local service representative contact information, including phone numbers and e-mail addresses, on the cover.
b. Each manual shall include a table of contents, an index, and sequential section dividers separating equipment information into subsections. Each manual shall incorporate, at a minimum, the following: field installation instructions, brief written description of the equipment and corresponding components, change-out procedures, starting and stopping procedures, routine maintenance procedures, procedures for protecting the equipment during short-term and long-term downtime, schedules, parts lists, troubleshooting topics, illustrations and diagrams and safety instructions for operating personnel.
c. Each manual shall include any other information that is required by maintenance personnel for proper operation and maintenance.
d. Electronic files of the complete operation and maintenance manual are to be provided on CD.

1.5 QUALITY ASSURANCE

A. Qualifications

1. Manufacturer’s Factory Qualifications: Manufacturing facilities shall have accreditation to ISO 9000:2000 or an equivalent quality management system acceptable to the Engineer.

2. Seismic Design Engineer Qualifications: A professional engineer who is legally qualified to practice in the jurisdiction where Project is located and who is experienced in providing structural and seismic engineering services, including the design of seismic restraints.

3. Owner or Owner’s Representative will be conducting scheduled visits to Manufacturer’s manufacturing facilities during fabrication and/or Manufacturer’s shop testing procedures.

1.6 DELIVERY, STORAGE AND HANDLING

A. As required, disassemble and deliver GAC system in the minimum number of pieces.

B. Site access is via a one-way access road, parts of which are steeply graded. Equipment vendor to ensure adequate means of delivery are provided to enable delivery to the site. A site visit prior to delivery is recommended.

C. Materials and equipment shall be boxed, crated or otherwise completely enclosed and protected during delivery, storage and handling. Such boxes, crates or protection shall be clearly labeled with the Manufacturer's and Owner's name, site address, project equipment tag numbers, brand or model.

D. Deliver, store and handle to prevent damage and in accordance with Manufacturer's written instructions. Provide factory-installed lifting provisions.

E. The GAC system shall be delivered freight on board (FOB) to the project site.

F. Carbon shall not be delivered or installed until approximately two weeks prior to the initiation of operational commissioning at the site (assume date of April 30, 2012).

G. Manufacturer's storage requirements shall be provided. Units will be stored outside and unprotected from weather events for a prolonged period of time. Manufacturer shall provide adequate storage so as to prevent damage under these conditions.

1.7 WARRANTY

A. Provide parts and labor warranty in accordance with the Subcontractor Agreement For Services.

B. The standard warranty duration shall be from delivery date of units to one year after start-up. Start-up is defined as the initiation of operational commissioning (assume start-up to begin on April 30, 2012). Provide with the Bid the cost adder to extend the warranty for 42 months, as described in the Bid Tab document. The standard warranty shall include parts and labor for all supplied items, including but not limited to, equipment, controls, and coating system.

1.8 PERFORMANCE GUARANTEE

A. Performance shall be warrantied and proven. Performance shall be demonstrated continuously for four weeks after start-up under full operating conditions. Performance testing is by others. GAC Vendor shall be present at the site (assume 8 hours) to witness performance testing and provide input as requested. The provided GAC system shall be designed to achieve effluent concentrations, given the maximum influent concentrations provided on Table 2. Performance shall be warrantied over the entire range of flow rates. Anticipated maximum influent concentrations, required effluent concentrations, and minimum and maximum flow rates for the system are provided in Table 2. If the equipment fails to continuously meet this effluent quality during the warranty period, the

Manufacturer shall, at no additional cost to the Owner or Buyer, provide and install replacement equipment, parts, and labor to correct demonstrated performance deficiencies as needed to achieve the required performance.

PART 2 - PRODUCTS

2.1 MANUFACTURERS

A. The following Manufacturers are named to establish a standard of quality necessary for the Project:

1. Calgon Carbon
2. Siemens Water Technology
3. Carbonair Environmental
4. Carbtrol Corporation
5. TIGG Corporation
6. Envirogen
7. Or approved equal

2.2 PERFORMANCE REQUIREMENTS

A. The GAC vessels shall be suitable for contact removal of VOCs and SVOCs from the water stream with the design influent characteristics to the effluent concentrations as specified in Table 2 herein. The GAC vessels shall also be backwashable.

B. Water constituents and concentrations are provided in Table 2 herein.

C. Emphasis will be placed on the following criteria and objectives to evaluate Bids for the GAC system. The GAC system criteria shall be as follows:

1. Application – Adsorption of VOCs/SVOCs

2. Minimum Empty Bed Contact Time (EBCT) – The GAC system shall be sized to achieve a minimum EBCT of 15 minutes (lead and lag vessels combined). During times when a GAC unit is taken offline for backwashing or change-out, the system shall be sized such that the remaining GAC vessels shall be capable of accepting and treating the full flow with a reduced EBCT of 14 minutes, minimum.

3. Vendor to optimize design such that operational downtime is minimized. System shall be designed so that no vessels are off-line for more than four hours for normal maintenance, backwashing or carbon change-out events. An important factor in the consideration of the award of the purchase contract for the GAC system will be Vendor's design and/or operational strategies, equipment sizing, and other ideas and concepts which place a high importance on maximizing system uptime. Vendor shall present any original alternatives which maximize uptime with the Bid.

4. Vendor design and operational strategy shall minimize, to the extent possible, the amount of spent backwash water generated and also minimize the amount of solids in the spent backwash water. Any means of lessening the volume and/or amount of solids in the spent backwash water shall be specifically identified by the Vendor with the Bid as this is an important factor in the consideration of the award of the contract.

5. Since maximizing system uptime is a main concern, it is important to minimize the time required to perform routine change-out events. Good operational start-up practice for bringing new carbon on-line should include sufficient time to wet the carbon and allow for degassing, stratification, and removal of fines and alkalinity. However, this wetting period should not take away from system uptime. Therefore, Vendor should provide with the Bid their plan for managing change-out events to minimize downtime, operating and capital costs. Vendor shall provide with the Bid the estimated time required to perform a carbon change-out event.

6. Upon notification from site Operators that a vessel change-out is required, Vendor shall be capable of arriving at the site within a reasonable amount of time with the appropriate materials required to perform a vessel change-out so that system is not required to be shut down on contaminant breakthrough through the lag vessel. Vendor to provide with the Bid the number of hours required from when the call for a change-out is received, until arrival on-site to begin the change-out, including if notification occurs on a weekend or holiday, if different than at other times.

7. Although maximum concentrations and flow rates have been identified, actual flow rates and concentrations may be less than what is expected. The first year of operation will establish typical flow rates and concentrations and will be used to fine-tune equipment requirements and operational plans for future years of operation. As such, Vendor shall propose ways to optimize the design of the GAC system. Strategies such as the purchase of a core number of vessels during year one supplemented by lease of additional units as needed will be entertained. If actual conditions warrant the eventual purchase of these leased units, the accrued lease costs would then be applied towards the purchase of these units. Other strategies, as proposed by the Vendor with the Bid, are encouraged and will be evaluated.

8. Materials of Construction, Vessels – Vessel materials of construction should be selected by the Vendor to be compatible with constituents found in the water at the concentrations identified herein (see Table 2). When selecting materials of construction, the Vendor shall also consider the expected project lifespan of 4 years and select materials of construction accordingly, except for the single lead/lag system that is expected to remain operational for the long-term project life and as addressed by the alternative materials of construction described in Bid Item No. 2.

D. All vessels and equipment shall be designed to resist the design loads per the Building Code of New York State (BCNYS) 2007 edition, including sloshing effects resulting from a hydrodynamic and/or seismic analysis. Vessel/equipment support layout details, including locations of anchor bolt holes, anchor bolt size and type, and embedment length

shall be provided. Maximum Reaction Forces and moments at each anchor point shall be provided. The structural design criteria provided below for this site are preliminary, based on initial information available for the site, and are subject to change upon completion of a site geotechnical evaluation. Finalized structural design criteria will be provided prior to award of the Contract. Once finalized design criteria is provided, Vendor to certify that equipment design and anchoring is in compliance with the finalized structural design criteria. Draft structural design criteria are as follows:

LIVE LOAD:	
Roof Live Load	20 psf
Floor Live Load	250 psf or 3 kips
SEISMIC DESIGN CRITERIA:	
Seismic Importance Factor, I_E	1.25
Seismic Use Group	II
Mapped Spectral Response Acceleration, S_S	0.192 g
Mapped Spectral Response Acceleration, S_1	0.078 g
5% Damped Spectral Response Acceleration at Short Periods, S_{DS}	0.32 g
5% Damped Spectral Response Acceleration at 1 sec Periods, S_{D1}	0.182 g
Seismic Design Category, SDC	C

E. GAC system shall be designed for lead/lag operation. Manually operated valves and manifold piping shall be provided such that either unit may operate in the lead position. Operator should be able to select (by manual manipulation of valve operators) which of the vessels is to serve as the lead vessel. Also, design of the entire system shall allow the isolation of any unit (1 pair of vessels) for backwash or carbon change-out while maintaining full flow through the other units. A valve sequencing chart and valve labels shall be provided by the Vendor for this purpose and to minimize potential Operator mistakes.

F. The design of the valve manifold skid shall be sized to include extra space to allow a change to automated (electrically-actuated) valves in the future. Shop drawings shall show (in dashed lines) the outline of potential future valve actuators, drawn to scale. Proposed actuator make and model shall be identified by the Vendor with shop drawings provided to indicate how, if required in the future, they may be fitted up to the valves. Vendor shall verify that the proposed valve is able to be mated with the proposed actuator.

G. The GAC units will be placed on a former wastebed. As such, the soils are limited in the amount of weight they can support. Units must be designed to limit loading to less than 1,500 pounds per square foot when full of carbon and water, or just water. Therefore, GAC units are required to be skid-mounted with skids to comply with the 1,500 psf loading criteria. Skids are to be installed on either timber mats or concrete pads. Vendor to identify any concerns with planned support arrangement. Because of the properties of the soil, it is expected that potentially uneven settlement will occur. Assume the maximum acceptable settlement is as follows: less than 3/4” differential settlement across each unit and less than 1.5” of total overall settlement. Equipment Manufacturer shall identify the maximum acceptable differential settlement their unit can encounter without affecting the equipment or its operation.

H. The vessels shall be designed for a pressure of 125 psig or 1.3 times the peak pressure during the backwash cycle, whichever is greater. The vessels shall be designed and fabricated in accordance with ASME boiler and unfired pressure vessel code. ASME code stamp is required.

I. Manufacturer shall identify minimum flow rate into the GACs that will still allow for proper operational performance.

J. Each GAC vessel shall be equipped with a vent connection with a manual valve for air/vacuum relief. Additionally, over-pressurization protection, differential pressure indicating transmitter, and inlet and outlet pressure gauges shall be provided as shown on the P&ID. The pressure differential transmitter shall be provided to alarm to the Distributed Control System (DCS) upon exceedance of a pre-set, operator-adjustable pressure differential. Each vessel shall be provided with influent and effluent sample cocks. Instrumentation and control components shall be sized per Manufacturer's recommendations and shall comply with the "Instrumentation and Controls Requirements" document attached herein. Over-pressurization protection shall consist of a standard rupture disk designed for bursting pressure of 95% (+/-5%) of the working design pressure or other Engineer-approved device. The rupture disk shall be equipped with a tell-tale device which alerts the Operator (via an alarm to the DCS) that the disk has ruptured. The rupture disk will be interlocked to shut a feed valve to the GAC system upon rupturing. The rupture disk shall be in compliance with ASME code requirements.

K. A sight flow indicator tube shall be provided on the backwash waste line of each adsorber. The sight tube shall consist of a 2 foot long (minimum) section of transparent rigid pipe or other Engineer-approved design.

L. The GAC vessels shall contain a minimum 14" x 18", easy-open type manway suitable for maintenance access on the top dish of each unit and a second manway on the straight sidewall with a minimum opening dimension of not less than 20" diameter. Alternative dimensions will be considered. Manways must be suitably sized to allow entry for inspection and repair of coatings and interior components. Manways shall comply with ASME boiler and unfired pressure vessel code. Manways shall be flanged. Side manways shall be equipped with a davit hinge.

M. The inlet and outlet distribution laterals shall be designed to provide uniform distribution of flow at any flow rate range between the minimum and maximum flow rates specified herein. Inlet and outlet distribution laterals shall be separated from the carbon.

N. The underdrain system shall be capable of supporting the carbon when the vessel is filled with water and pressured to the system design pressure.

O. Each unit shall be equipped with a minimum of three lifting lugs to facilitate lifting/rigging.

P. Each GAC vessel shall be equipped with carbon loading and clean-out ports. The setup shall allow the removal and addition of carbon in a fluidized form. Manufacturer shall provide manual air/vacuum relief, as required, to promote GAC filling and clean-out activities. Adsorber design shall incorporate the feature to remove carbon without

requiring the adsorber to be opened and cleaned or hosed. Carbon loading and drain line shall be fitted with quick disconnect adapters. A mating tank truck adapter shall be provided for each type and size of quick disconnect fitting provided.

Q. The Manufacturer shall provide face (manifold) piping between the lead and lag carbon vessels. Manifold piping shall be pre-assembled and skid-mounted by the Manufacturer and shall require only the connection of the influent, effluent and backwash influent and effluent piping in the field. Valves shall be Manufacturer's standard if they are suitable for expected concentrations of constituents found in the water. Valves located higher than 6 feet shall be equipped with a chain operator. Valves 8 inches and larger shall be equipped with a gear operator.

R. Treatability testing indicates the build-up of gas bubbles which form within the carbon vessel occupying the voids between the carbon media. The treatability testing results are provided as an Appendix herein. It is not apparent if the bubbles are a result of bioactivity, a by-product of a chemical reaction taking place, or as a result of another phenomenon. The presence of these gas bubbles may act to reduce the surface area of available carbon media, thereby reducing treatability. Therefore, GAC vessels shall be capable of being backwashed with water. The source of backwash water shall be from an external treated water source (by others). Manufacturer to identify size and location of connection(s) provided for the backwash piping. Manufacturer to design and size system such that only a single vessel can be backwashed at any one time. Manufacturer to identify backwash pumping flow and head (at the vessel) requirements and durations with the Bid.

S. The Subcontractor shall provide GAC media that meets the design requirements. The depth of media shall be provided by the Manufacturer. Coal-based carbon shall be used. A cost comparison will be performed to evaluate the use of virgin carbon vs. reactivated carbon (as shown in the Bid Items). If reactivated carbon is used, the initial carbon fill would be with virgin carbon. Thereafter, the same carbon would be reactivated and returned to the site. This reactivated carbon would be dedicated solely to this Honeywell project. Additional carbon used to supplement the reactivated carbon, as needed, would be virgin type carbon. All virgin carbon (including carbon used to supplement after reactivation) shall meet the following criteria:

Iodine Number, mg/g (min)	1000
Moisture, weight % (max)	2
Abrasion Number (min)	75
Effective Size (mm)	0.55-0.75
Uniformity Coefficient (max)	1.9
Ash, weight % (max)	9
Apparent Density, g/cc (min)	0.44
Screen Size, US Sieve Series, weight %	
Larger than No. 12 (max)	5
Smaller than No. 40 (max)	4

All reactivated carbon shall meet the following criteria:

Iodine Number, mg/g (min)	900
Moisture, weight % (max)	2
Abrasion Number (min)	75
Effective Size (mm)	0.55-0.75

Uniformity Coefficient (max)	1.9
Ash, weight % (max)	9
Apparent Density, g/cc (min)	0.44
Screen Size, US Sieve Series, weight %	
Larger than No. 12 (max)	5
Smaller than No. 40 (max)	4

T. The attached P&ID I-09 shows a typical downflow, pressure-type GAC vessel system. The P&ID is to be used only as an example of the functionality of a GAC system. Alternate types of systems may be considered.

U. Controls and alarms associated with the GAC system are to be integrated into a DCS. Programming and hardware associated with the DCS is by others. The Manufacturer shall provide supporting documents as specified in the "Instrumentation and Controls Requirements" appendix for Vendor provided instruments. All instruments will be installed and wired back to common electrical and instrumentation terminal boxes by the Manufacturer. One terminal box shall be provided for each lead/lag unit. Terminal boxes shall be NEMA 4X enclosures for operation in an indoor, unheated temporary structure.

V. Manufacturer shall recommend alarm conditions and setpoints, as appropriate. Manufacturer shall identify recommended time delay to minimize nuisance alarms.

W. Electrical classification is ordinary.

X. The Manufacturer shall conduct shop testing to satisfy hydraulic conditions and pressure ratings of each tank. The GAC vessels shall be hydrostatically pressure tested by the Manufacturer at the shop prior to delivery to the site. Certified test reports for each unit shall be provided prior to delivery.

Y. The interiors of the GAC vessels, equipment, piping, and all wetted ancillaries are to be constructed of materials that are compatible with the water characteristics provided in Table 2. Note the water exhibits chlorides and organic compound solvent concentrations.

Z. All tanks, equipment items, valves, and instruments shall be provided with stainless steel tags. Tags shall be permanently affixed or chained to the item, and will indicate the tag number and description of the item as shown on the P&IDs. Lettering on the tag shall be etched or struck, with a minimum letter height of 0.5 inches.

AA. Vendor shall identify any issues that may result from a prolonged shutdown and what time interval it would be expected that the issues may occur at.

2.3 SHOP FINISHES

A. All surfaces to be coated shall be prepared in accordance with PIP VESV1003HA and Honeywell's associated overlay document associated with the PIP specification. Surface preparation prior to coating application shall be in accordance with the NACE standard

SP0178 and NACE SP0178 Appendix C NACE Weld Preparation Designation C, and coating Manufacturer's instructions, whichever is more stringent.

B. The Manufacturer shall provide a shop applied protective coating system for all wetted metal surfaces of the GAC vessel package. The interior linings of the vessels shall be compatible with the influent parameters and concentrations presented in this specification and shall be abrasion resistant for this intended use. Coal tar epoxy is not an acceptable interior lining. Proposed coating and lining systems and DFT proposed shall be provided. Stainless steel does not require coating. Cathodic protection may be used for supplemental corrosion resistance, as recommended by the Manufacturer.

C. The Manufacturer shall provide a shop-applied protective coating system for all non-wetted metal surfaces of the GAC system.

2.4 SOURCE QUALITY CONTROL

A. Factory Quality Certification

1. Provide written documentation of Manufacturer's Factory Quality Management system to satisfy Quality Assurance requirements as specified in Section 1.5.

B. Factory Assembly

1. GAC systems shall be manufactured in accordance with the Factory Quality Management system's certification document.

C. Factory Test

1. Each GAC system shall be factory tested as follows:

   a. Manufacturer's standard inspections and tests
   b. Hydrostatically tested by the Manufacturer at the shop prior to delivery to the site. Notice shall be given to the Engineer at least two weeks prior to hydrostatically testing the equipment, so that arrangements can be made for Engineer or other Owner's Representative to witness the testing at the Manufacturer's facility.
   c. Testing of interior coating systems per NACE standards SP0188 and SP0178.

2. Submit factory test reports for approval prior to shipment.

PART 3 - EXECUTION

3.1 EXAMINATION

A. As part of on-site start-up services, Manufacturer's representative shall examine areas and conditions for compliance with Manufacturer's installation recommendations and requirements.

B. Proceed with start-up only after unsatisfactory conditions have been corrected.

3.2 INSTALLATION

A. Installation is by others. Installation shall be per Manufacturer's instructions.

B. The GAC system shall fit and be serviceable in the allocated space as shown on the Site Plan (Drawing GA-01). Dimensions of building access doors and overhead clearances were provided previously herein.

3.3 FIELD QUALITY CONTROL

A. The Manufacturer shall furnish the services of a Manufacturer's representative to inspect the installation (by others) and to provide start-up services for the units.

3.4 MANUFACTURER'S FIELD SERVICES

A. The on-site services of the Manufacturer's field representative shall be provided during the start-up and adjustment in accordance with this specification and as identified in the Bid Documents.

B. The services of the Manufacturer's field representative shall be provided during installation. The Manufacturer's field representative is not required to be on-site during installation efforts, but will be conferred if problems or questions occur during installation.

C. A factory-authorized service representative shall perform the following inspections and checks:

1. Inspect field-assembled components, equipment installation, and electrical connections for compliance with the Manufacturer's installation recommendations and requirements.

2. Set field-adjustable settings to the values recommended by the equipment Manufacturer.

3. Witness and provide input as requested during on-site performance tests (testing to be performed by others).

4. Perform or supervise start-up services.

5. Prepare written report to record the following:

a. Inspections and checks carried out on site

3.5 DEMONSTRATION AND TRAINING

A. Engage a factory-authorized service representative to train Owner's maintenance personnel to adjust, operate, and maintain the equipment.

1. Review data in Operation and Maintenance manuals.

2. Schedule training with Owner /Engineer, with at least two weeks advance notice.

B. The on-site services of the Manufacturer's representative shall be provided as separate visits, if required, for the minimum hours as listed below for the GAC system:

1. Twenty-Eight hours for inspection, certification of installation and start-up.

2. Eight hours of site presence during performance testing.

3. Four hours on-site for the owner's personnel training.

Vendor shall advise if the amount of hours specified are reasonable or provide the number of hours recommended if different than what is allotted above.

3.6 MAINTENANCE/SERVICE CONTRACT

A. Refer to Bid Tab Item 7.

PART 4 - APPENDICES

A. Table 1 – GAC Submittal Schedule

B. Table 2 – Constituent Concentrations

C. Process Flow Diagram – PFD-1

D. P&ID I-09 Carbon Filters

E. General Arrangement Plan – GA-01

F. Treatability Testing Results

G. Section 16900 - Instrumentation and Controls Requirements

H. Honeywell overlay document
1. Process Industry Practices (PIP) Standard VESV1003
2. Honeywell Specification MSL-2002 HW ***(not applicable for this contract)***

I. NACE SPO178-2007 - Design, Fabrication, and Surface Finish Practices for Tanks and Vessels to Be Lined for Immersion Service

J. NACE SPO188-2006 - Discontinuity (Holiday) Testing of New Protective Coatings on Conductive Substrates

END OF SECTION

SECTION 40 91 00

INSTRUMENTATION AND CONTROLS REQUIREMENTS

PART 1 - GENERAL

1.1 SUMMARY

A. This Section includes general requirements for all instrumentation as shown on the Contract Drawings.

B. This Section shall apply to all instrumentation furnished on this project, regardless of whether it is specifically identified in this Section.

C. The Electrical Contractor shall supply, mount, install, wire, terminate, and configure all instrumentation, instrumentation equipment, and components as specified herein. The Electrical Contractor shall provide all necessary brackets and mounting hardware required by the instrument manufacturer for proper installation.

D. The General Contractor shall be responsible for all process piping (air, water, etc.) to and away from instruments and all instrument air as required and specified herein.

E. All automated controls required for equipment provided shall be integrated into the Treatment System's Honeywell Experian, PKS Distributed Control System (DCS). Programming of the DCS is by others.

F. The equipment supplier shall provide related instrumentation, control valves, and motors as shown on the Contract Process and Instrumentation Diagrams. Instruments and valves shall be mounted on the provided equipment by the equipment supplier. Wiring to and from the instrumentation and electrical equipment is by others. To accomplish unit responsibility, it is the intent that the equipment supplier provides all instrumentation and primary control devices associated with the packaged equipment.

G. Instrumentation, analytical equipment, and other components manufactured or marketed by Honeywell International shall be provided to the greatest extent possible. Any exceptions to specified equipment shall be clearly listed, along with justification in the submitted proposal for consideration by the Owner's Representative.

1.2 REFERENCES

A. Comply with the latest revision of the following codes, standards and specifications, except where more stringent requirements have been specified herein:

1. American National Standards Institute (ANSI)
2. Institute of Electrical and Electronics Owner's Representatives (IEEE)
3. International Society of Automation (ISA)
4. Joint Industry Council (JIC)
5. National Electric Manufacturers Association (NEMA)
6. National Electrical Code (NEC)

7. National Electrical Testing Association (NETA)
8. Underwriters Laboratories, Inc. (UL)

B. Related Specification Sections
1. All Electrical sections

1.3 COORDINATION REQUIREMENTS

A. Instrumentation shall be located, installed, and wired as shown in the Contract Drawings.

B. Coordinate installation with General Contractor. General Contractor shall be responsible for process piping (air, water, etc.) to and away from instruments.

C. Verify process connection(s), electrical connection(s), and ranges for both process and electrical.

D. Materials of construction shall be suitable for the intended application and environment.

1.4 SUBMITTALS

A. Submit the following in accordance with the General Conditions/General Requirements.

B. The equipment supplier is to provide a detailed "Functional Design Specification" (FDS).

The FDS shall be the basis for which the Distributed Control System (DCS) control logic shall be developed for the equipment supplied. This document shall be written and detailed so that a programmer that may not be familiar with the specific process system can implement the necessary logic to properly control and safe-guard the process and equipment provided. In addition to the FDS, supplemental information such as a "Cause and Effect" (C&E) table and an example DCS or Programmable Logic Controller (PLC) program shall also be provided. The C&E table shall list each piece of equipment and instrument that is to be controlled and monitored by the DCS. Normal modes of operations and interlocks shall be detailed in the table. The example program developed by the equipment supplier for a similar system shall be provided in Adobe Acrobat (PDF) format and be well-documented, including address tags, descriptions, and rung descriptions (if applicable).

The FDS and supplemental information shall be reviewed by the Owner's Representative and revised as necessary by the manufacturer so that it meets these requirements.

C. All required motors, pumps, agitators, valves, instrumentation, and other related equipment are to be provided by the system manufacturer per the plans and specifications. The manufacturer is required to provide the following information, at a minimum, in regards to the control and monitoring of this equipment. If any special requirements exist for the installation, operation, and/or control of provided equipment, specific to the related process, the equipment supplier shall notify the Owner's Representative in the submitted proposal:

1. Motor nameplate data, including voltage, full-load amps, RPM, and service factor.
2. If the motor is to be controlled via a Variable Frequency Drive (VFD), provide maximum turn-down (minimum speed) that the motor and connected equipment (pump/agitator) can operate at. All motors supplied for VFD operation shall be inverter duty.
3. Maximum number of recommended start/stop/restart cycles per hour and minimum recommended runtime or "on cycle".
4. Minimum submergence of agitator impeller.
5. Air requirements (pressure and flow) for all pneumatically actuated valves.

Note: VFDs and motor starters are to be provided by others. Refer to the Electrical Specifications for motor and electrical requirements.

D. The equipment supplier shall compile an instrumentation and equipment list that lists the tag number, associated P&ID number, manufacturer, model number, process connections, power requirements, and control and/or signal connection requirements.

E. Product Data: "Catalog cuts" and spec sheets marked to specifically indicate the equipment and materials proposed for this project. Indicate selections with arrows, and cross out irrelevant data. Label each data sheet with the tag ID assigned to the instrument.

F. Shop Drawings: Electrical wiring diagrams.

G. Manufacturer Instructions: Installation instructions.

H. Closeout Submittals
1. Calibration information: Vendor calibration datasheets, calibration data for all field calibrated instruments, Calibration check data for vendor calibrated instruments
2. Operation and Maintenance Manuals: Installation instructions, Configuration and setup instructions, Quick start guides, User Manuals.
3. Warranty Documentation: Start date, duration, conditions, manufacturer contact information, local vendor or support representative contact information.
4. Sustainable Design Closeout Documentation:
5. Software: Vendor, Manufacture, and Contractor supplied.

1.5 QUALITY ASSURANCE

A. Qualifications
1. Manufacturer's Factory Qualifications: Manufacturing facilities shall have accreditation to ISO 9000:2000 or an equivalent quality management system acceptable to the Owner's Representative.

B. Instruments not specifically described or identified by manufacturer's catalog numbers shall be designed in conformity with ANSI, IEEE, ISA, JIC, NEMA, and other applicable technical standards. The work shall have neat and finished appearance.

1.6 DELIVERY, STORAGE AND HANDLING

A. Temporary storage of instruments shall be in clean dry indoor rooms with a temporary dehumidifier and electric heating to maintain the storeroom between 5 and 40 °C, with humidity less than 90%. Comply with manufacturer's additional written instructions for storing and periodic inspection and testing.

B. Handle instrumentation materials and equipment in conformance with the manufacturer’s written instructions.

C. Conductivity, pH sensors, any other analytical sensing elements, transmitters, instruments or other devices which may be damaged in shipment, shall be removed prior to shipment. Special packing requirements for perishable analytical sensing elements shall be provided.

D. Instruments which are completely removed for shipments, must have their locations on the skid and shipping package clearly marked with the instrument tag number. The equipment supplier shall provide instructions for reinstallation of any instrumentation or control equipment removed for shipment.

1.7 WARRANTY

A. Provide parts and labor warranty in accordance with the General Conditions.

B. Provide an on-site parts and labor warranty for a minimum period of one year after Substantial Completion for all instruments. In cases where the manufacturer offers a longer warranty period, the longer warranty period shall apply as described by the manufacturer.

C. All instruments that are not fully functional at the time of Substantial Completion shall have warranties extended to provide minimum one year coverage after making the instrument operational, unless otherwise approved by the Owner’s Representative.

PART 2 - PRODUCTS

2.1 ELECTRICAL ENCLOSURES

A. Electrical enclosures shall have degree of protection ratings suitable for the intended application (e.g., watertight, dust-tight, explosion-proof) and environmental conditions. Electrical equipment enclosures shall at a minimum have the following ratings and materials of construction:

1. Indoor enclosures: NEMA 12 in clean and dry electrical rooms and control rooms. All other areas, except Hazardous (Classified) locations, shall be NEMA 4X stainless steel or FRP.
2. Outdoor enclosures: NEMA 4X stainless steel or FRP, except Hazardous (Classified) locations.
3. Hazardous (Classified) areas: Epoxy powder-coated cast aluminum NEMA 7 and/or 9 with UL listing for the hazard classification.

2.2 ELECTROMAGNETIC INTERFERENCE

A. Power conversion equipment, including computer power supplies and Uninterruptible Power Supplies (UPS), shall be fitted with EMI (electromagnetic interference), RFI (radio frequency interference), and telephone interference filters to limit interference effects on other equipment in the surrounding area, in accordance with IEEE standards and recommendations applicable to the equipment.

B. Equipment may be powered from electrical sources that may include harmonic distortion, surges, sags, and other electrical noise under normal operating conditions. Equipment furnished under this Contract shall be installed with such accessories, surge protection, power line conditioners, UPS, or other means as may be required for it to function correctly in this noisy electrical environment.

2.3 SURGE PROTECTION

A. Power and signal wiring of all instruments located outside of buildings and inline instruments (magnetic flow meters) shall be protected with surge arresting devices.

2.4 SIGNAL DEVICES

A. Signal isolator/duplicator(s) shall be used for the retransmission of signals to other areas, other locations, other loops, and especially when leaving the building.

B. Signal isolator/duplicator(s) shall be provided as required to ensure adjacent component impedance match where feedback paths may be generated, or to maintain loop integrity during the removal of a loop component.

C. Signal conditioners and converters shall be provided where required to resolve any signal level incompatibilities or provide required functions.

D. In Hazardous (Classified) areas, intrinsic safety barriers (ISB) and conduit with filled seal-offs shall be used for both power and signal wiring - isolating the hazardous area from the safe area electrically.

2.5 INSTRUMENT AIR

A. Dry, filtered control air at 30 psig nominal pressure shall be piped to instruments and instrument panels requiring air. Each instrument shall be provided with an integral, non-adjustable filter/regulator assembly to provide regulated air. Each instrument panel requiring air shall be provided with an adjustable filter/regulator assembly with gauge and an air manifold to provide air to pneumatic instruments. Air shall be filtered to 5 micron maximum particle size. Pressure reducers and regulators shall be furnished with additional instrumentation as required.

B. All instrument air piping and equipment supply, installation, connections, labor, and adjustments shall be by the General Contractor, under the Electrical Contractor’s direction.

2.6 INSTRUMENT PROCESS PIPING

A. The General Contractor shall be responsible for all process piping (air, water, etc.) to and away from instruments as required. The General Contractor shall furnish all necessary materials, connectors, equipment, and labor and shall take direction from the Electrical Contractor regarding the instrument's needs, requirements, and recommendations.

2.7 INSTRUMENT TAGS

A. All instruments shall be permanently labeled/marked with a metallic (non-corrosive) tag containing the "Tag ID" and "Description". The complete tag number including P&ID sheet shall be used. A sample tag shall be submitted to the Owner's Representative for review and approval before commencing instrument tagging.

2.8 GENERAL

A. Instrumentation equipment included as part of the system shall be provided as indicated on the Contract Drawings and as specified below. Instrumentation, analytical equipment, and other components manufactured or marketed by Honeywell International shall be provided to the greatest extent possible. Any exceptions to specified equipment shall be clearly listed, along with justification in the submitted proposal for consideration by the Owner's Representative.

B. The equipment supplier shall be responsible for providing devices with the proper operating range, model number, pressure and temperature rating, and material of construction based on fluid properties, operating conditions, and mechanical design constraints for all furnished instruments.

C. The equipment supplier shall provide, install, calibrate (if not purchased with standard factory calibration), provide operation and maintenance manuals, calibration documentation, and test all components to ensure functionality prior to inspection or acceptance testing of any instrumentation or equipment by the Owner or Owner's Representative.

D. It is the equipment supplier's responsibility to confirm that the materials of construction of the instruments, analytical equipment, and other wetted parts shall be unaffected by the water chemistry parameters at the given concentrations.

E. The acceptance of the equipment supplier's drawings by the Owner's Representative does not relieve the equipment supplier of responsibility. Acceptance is an authorization to proceed with manufacturing only; it is not an approval of equipment supplier's design or acceptance of the design as meeting all design requirements.

F. The equipment supplier shall organize the installation of all sensors and final control elements within the physical boundaries of the process and mechanical equipment packages. For loose shipped instrumentation and control equipment outside the physical boundaries of the skid package or which shall be removed for shipping, the equipment supplier shall provide full installation, testing and operational instructions.

G. All equipment, conduit, and junction boxes to be located in Areas of the facility designated as Class 1, Division 2, Group D shall be rated for such classifications and shall be installed appropriately.

H. Instrumentation equipment supplied by the equipment supplier shall be suitable for operation in the electrical and environmental area classification.

I. Instruments shall be rated for the maximum allowable pressure and temperature of the line or vessel to which the instrument is installed. Owner's Representative is to be notified in writing of any exceptions

J. Instruments providing similar function shall be of the same manufacturer and, as much as possible, the same model/series for purposes of parts interchangeability.

K. Instruments shall be new, of the latest design, original, free from defects, and shall have a new warranty.

L. Unless otherwise specified, each instrument shall be accurate within 1% of full-scale reading over the calibrated range. This accuracy requirement shall apply to each overall system, including any transmitters, re-transmitters, receivers, etc. that are required.

M. Indicating transmitters are designated by the letter "I" in the Tag ID (i.e. LIT, PIT) and shall have an integral digital display for indication of real-time process values in scaled Engineering Units (EU).

2.9 MATERIALS AND CONSTRUCTION

A. Materials of construction shall be suitable for the intended application and environment and fully compatible with the process being measured (especially chemicals).

B. Instruments shall have NEMA 4 rated housings, except in Hazardous (Classified) locations where NEMA 7 and/or 9 with UL listing for the hazard classification is required.

C. Instruments located in unheated environments shall be provided with heating as required to prevent freezing and improper operation.

2.10 ACCESSORIES

A. Instruments shall be provided with required probe holders and installation hardware as recommended by the manufacturer for proper operation.

B. Any devices, equipment, interfaces, hand-held devices, cables, connectors, and solutions necessary to configure, modify, analyze, and calibrate a supplied transmitter shall be provided with the transmitter and be turned over to the Owner after successful commissioning.

C. Where recommended by the manufacturer, power converters, reactors, or power supplies shall be provided integral with the instrument.

2.11 SOURCE QUALITY CONTROL

A. Factory Quality Certification

1. Submit copy of factory quality assurance certificate.

B. Factory Assembly

1. Instruments shall be manufactured in accordance with the factory quality certification documents.

C. Factory Calibration

1. Instruments shall be factory calibrated to minimize field adjustments and insure proper operation.

D. Factory Test

1. Each instrument shall be factory tested as follows:
   a. Manufacturer's standard inspections and tests
   b. Performance test over calibrated range
2. Submit factory test report for approval prior to shipment.

2.12 SHOP FINISHES

A. With the exception of those parts and components customarily furnished unpainted, prepare and coat all metal surfaces with rust inhibitive shop paint. Shop paint shall be fully compatible with the field paint specified.

B. Protect machined surfaces against damage and corrosion by other means.

2.13 SPARE PARTS

A. All Instrumentation shall be provided with one (1) year of supplies (charts, pens, ribbons, filaments, etc), spare parts (bulbs, fuses, etc), and calibration solutions necessary for continuous and accurate operation. Rebuild kits for pH and ORP probes are required to be provided if applicable.

B. Spare parts shall include all parts normally provided by the manufacturer for systems of similar size, construction, and purpose.

C. All spare parts shall be packaged in separate containers with the part name and number clearly marked.

D. Provide 25% spare fuses of each type supplied with the instrument.

E. Package spare parts in wooden boxes, labeled with the manufacturer's name, address and telephone number; local representative's name, address and telephone number; name of equipment the parts are for and list of parts contained therein.

F. All spare parts shall be included in the base bid.

2.14 EQUIPMENT

A. Level Switches - Float Type

1. Mechanical tilt float level switch, with a sealed cable and an impact & corrosion resistant plastic shell.
2. Float shall be either internally or externally weighted, depending on application.
3. Switch shall be mercury-free, SPDT snap action switch 10 amp at 120 VAC.
4. Manufacture/Model:
   a. Anchor Scientific, Inc Eco-Float, model G

B. Level Switches - Multi-Point Type

1. Multiple float switches mounted along a single mounting stem.
2. Each float shall operate Form C SPDT contacts.
3. Float shall be either 316 Stainless Steel or Buna N depending on application.
4. Switch shall be mercury-free, SPDT snap action switch.
5. Manufacture/Model:
   a. Gems Sensors Fabri-Level

C. Level Switches - Containment Type

1. Float switches shall be suitable for operation with required fluid in containment areas.
2. Float shall activate “non-mercury” magnetically actuated switch within 1 inch of resting position.
3. Float switch shall require no adjustments and need no calibration.
4. Mount 1” above leak detection sump floor or as required by application.
5. Manufacture/Model:
   a. Gems Sensors Model LS-1750

D. Level Switches - Vibrating Type

1. Switch shall be able to mount on top or side of tank, depending on the application.
2. Output Switch shall be SPDT relay.
3. Instrument shall be configured for full-fail safe mode.
4. Provide “hot taps” or packing glands and ball valve so that instrument can be easily removed without having to drain the associated vessel or pipe.
5. Manufacture/Model:
   a. Endress + Hauser, Liquiphant M, model FTL50 or FTL 51

E. Continuous Level Transmitters - Non-Contact Radar

1. Equipment supplier shall complete and submit to manufacturer, the equipment supplier application data sheet and Declaration of Conformity. Copies of the completed application data sheet and manufacturer’s recommended model shall be submitted to Owner’s Representative for review.
2. Output shall be two-wire, 4-20mADC/Hart.

3. Local display either integral to the instrument or remote mounted for ease of visibility by operators shall be included.
4. Equipment supplier to provide on-site factory start-up to ensure instrument is configured and tuned for specific application.
5. Manufacture/Model:
   a. Ohmart/Vega, VegaPulse Series

F. Continuous Level Transmitters - Guided Wave Radar

1. Equipment supplier shall complete and submit to manufacturer, the equipment supplier application data sheet and Declaration of Conformity. Copies of the completed application data sheet and manufacturer's recommended model shall be submitted to Owner's Representative for review.
2. Output shall be two-wire, 4-20mADC/Hart.
3. Local display either integral to the instrument or remote mounted for ease of visibility by operators shall be included.
4. Equipment supplier to provide on-site factory start-up to ensure instrument is configured and tuned for specific application.
5. Manufacture/Model:
   a. Ohmart/Vega, VegaFlex Series

G. Pressure Gauges

1. 2.5" dial size, glycerin filled, tube and socket material shall be unaffected by process water.
2. Process connection shall be ½" NPT.
3. Ranges shall be provided so that the normal operating pressure should be approximately 50% of full-scale range, or the maximum operating pressure should be approximately 75% of the full-scale range or as specified on the P&ID's.
4. All pressure gauges shall be mounted with a dedicated isolation valve.
5. Manufacture/Model:
   a. Ashcroft Duralife, Type 1009

H. Differential/Gauge Pressure Transmitters

1. Transmitter shall be two-wire, 4-20mADC/Hart output.
2. Local zero and span potentiometers or pushbuttons shall be provided.
3. Local, digital display scaled in Engineering units shall be provided.
4. Provide a three valve manifold is to be included and installed.
5. Manufacture/Model:
   a. Honeywell ST 3000, series 100

I. Pressure Switches

1. Switches shall be capable of resetting themselves within approximately 5% of their maximum range.
2. Low pressure applications may require smaller differentials.
3. Switches shall be provided with adjustments for readily adjusting the setpoints and deadband.
4. Pressure switches shall have SPDT, form "C" contacts rated for 5 amps at 120VAC or 24VDC minimum.
5. Pressure switches shall not be affected by vibration.
6. Process connection shall be ½" NPT.

7. Provide lower connection with a block and bleed valve.
8. Manufacture/Model:
   a. Ashcroft, Type 400, Series B

J. Isolation Diaphragms:
1. Material of construction depending on application.
2. Fill solution shall be silicone.
3. All dirty water (non-solids/sludge/slurry) gauges shall have continuous duty, clamped Teflon diaphragm seals.
4. All solids/sludge/slurry gauges shall have annular seals, constructed of materials compatible with the process.
5. Whenever possible the instrument should be mounted directly to the diaphragm.
6. Where capillary tubes/impulse lines are necessary, runs of capillary tubing shall be kept to a minimum.
7. Isolation diaphragms shall be factory filled and installed to instrument. Instrument to be calibrated after the installation of the diaphragm seal.
8. Manufacture/Model:
   a. Provided by instrument manufacturer

K. Flow Meters – Magnetic
1. Flow Element-
   a. Flow tube shall be flanged style, unless otherwise specified.
   b. Element Liner to be Teflon, electrodes to be Hastelloy C.
   c. Provide ground rings as recommended by manufacturer.
2. Flow Transmitter –
   a. 120VAC powered.
   b. 4-20mADC/Hart Output.
   c. Transmitter is to be remote mounted.
   d. Equipment supplier to provide a minimum of 30 feet of manufacturer's interconnecting cable per tube/transmitter.
3. Manufacture/Model:
   a. Honeywell VersaFlow, Series 1000 with Honeywell TWM 9000F Transmitter

L. Flow Meter- Clamp-on Type
1. Flow Element-
   a. Flow Element shall clamp-on style.
2. Flow Transmitter –
   a. 120VAC powered.
   b. 4-20mADC/Hart Output.
   c. Transmitter is to be remote mounted.
   d. Equipment supplier to provide a minimum of 30 feet of manufacturer's interconnecting cable per sonic/transmitter.
3. Manufacture/Model:
   a. Honeywell VersaFlow Sonic 1000 with Honeywell TWM 9000F Transmitter

M. Analytical – pH
1. Probe/Element –

a. Probes shall be mounted in such a manner that they can be easily removed from the process for calibration and maintenance.
b. Insertion assemblies or "Tee" unions when mounting in pipes to avoid the need to twist the probe cables when inserting or removing the probes.
c. If the probe is to be immersed in a tank, is shall be mounted and supported per manufacturer's recommendations.
d. Stilling wells to be provided where shown on Contract Drawings. At a minimum, the lower half of all stilling wells are to be perforated.

2. Analyzer/Transmitter –
   a. Two-wire, 4-20mADC/Hart output.
   b. Provide all necessary mounting brackets, connectors, and cord grips.
3. Manufacture/Model:
   a. Honeywell Durafet III or Meridian Series with Honeywell Series APT-2000 Transmitter

N. Analytical – Turbidimeter

1. Sensor –
   a. Probes shall be mounted in such a manner that they can be easily removed from the process for calibration and maintenance
2. Analyzer/Transmitter –
   a. 20VAC power
   b. 4-20mADC output.
   c. Provide all necessary mounting brackets, connectors, and cord grips. .
3. Manufacture/Model:
   a. Hach, Solitax SC Series with SC100 Transmitter

O. Flow Switch –Thermal Dispersion

1. Switches shall be capable of resetting themselves within approximately 5% of their maximum range.
2. Switches shall be provided with a delay timer for pump protection.
3. Flow switches shall have SPDT, form "C" contacts rated for 5 amps at 120VAC or 24VDC minimum.
4. Process connection shall be 3/4" FNPT.
5. Manufacture/Model:
   a. Kurz Silver 6300Series

P. Temperature Switch

1. Temperature switches shall include variable adjustable deadband and repeatability of 1% of range, knob type adjustment with tamperproof cover.
2. Temperature switch shall be SPDT snap-action, rated for 10 amps at 120VAC.
3. Process connection shall be 1/2" NPT.
4. Manufacture/Model:
   a. Ashcroft Type 400, L-Series

Q. Leak Switch

1. Designed to detect the presence of conductive liquids in small areas. Stainless steel probe in plastic housing.
2. SPDT snap action switch.
3. Manufacture/Model:
   a. Gems Sensors, Model DWP-25

R. Valve Actuators

1. Modulating Control Valves
   a. Valves shall fail in the position as noted on the data sheets and P&IDs.
   b. Clearance shall be provided in the piping arrangement to permit removal of the valve trim, accessories and valve superstructure without removing the valve body from the piping.
   c. Valve Actuator shall have a local position indicator.
   d. Valve positioner shall be mounted integral to the valve actuator. The positioner shall be a loop-powered device that receives a two-wire, 4-20mADC signal.
   e. Positioner shall have a local zero and span potentiometer or pushbutton.

2. On/Off Valves
   a. On-off valves shall be line sized, and shall be selected for minimum pressure drop.
   b. Each "on-off" valve is to be equipped with a local position indicator.
   c. Valves shall fail in the position as noted on the P&ID's.

3. Refer to P&ID's and equipment specifications for actuator type (pneumatic or electric). For pneumatic valves, solenoid valves shall be integrally mounted to the valves they operate. For systems with multiple valves, solenoid valve manifold panels can be provided.

4. Position switches indicating valve open or closed status are to be provided as indicated on the P&ID's. A switch used to indicate an open valve position (ZSO) shall be closed circuit when the valve is fully opened. A switch used to indicate a closed valve position (ZSC) shall be closed circuit when the valve is fully closed. Both limit switches shall be open when the valve is in mid-travel.

5. Manufacture/Model:
   a. Actuators shall be Automax
   b. Or approved equivalent.

PART 3 - EXECUTION

3.1 EXAMINATION

A. Examine areas and conditions for compliance with manufacturer's installation recommendations and requirements.

B. Examine roughing-in of instruments to verify the following:
   1. Environmental conditions are within the limitations established by the manufacturer.
   2. Each utility pipe and conduit is in the correct location.

C. Examine walls, floors, roofs, and concrete bases for suitable conditions for installation, for example, all overhead work of other trades is complete.

D. Verify that ground connections are in place and that installation of grounding described in Section “Grounding” is complete.

E. Proceed with installation only after unsatisfactory conditions have been corrected.

3.2 PREPARATION

A. Instruments shall be calibrated at the factory and shall not require additional calibration upon receipt or before installation. Bench or in-line function testing shall be performed to insure that instruments function properly and were configured to correct operating range.

B. Equipment supplier shall provide factory or field calibration sheets and configuration worksheets for each instrument provided.

3.3 INSTALLATION

A. Equipment suppliers shall receive and inspect all instruments and control devices to insure that they are not damaged, conform to specifications and function properly.

B. Install instruments as shown on the Contract Drawings and in accordance with the manufacturer’s installation instructions and recommendations.

C. The Electrical Contractor shall supply, mount, install, wire, terminate, and configure all instrumentation, instrumentation equipment, and components as specified herein. The Electrical Contractor shall provide all necessary brackets and mounting hardware required by the instrument manufacturer for proper installation.

D. The General Contractor shall be responsible for all process piping (air, water, etc.) to and away from instruments and all instrument air as required and specified herein.

E. Erect equipment in neat and workmanlike manner; align, level and adjust for satisfactory operation. Install so that parts are easily accessible for inspection, operation, maintenance and repair. Instruments shall be mounted upright, vertical, at eye level, and in locations easily and safely accessible. Minor deviations from indicated arrangements may be made, but only after obtaining approval from the Owner’s Representative.

F. AC power, DC power/signal, and communication cables shall be installed in separate conduit systems.

G. Electronic low-level signals (analog, discrete, and communications) shall be properly isolated, bundled and supported. These signals shall be routed and separated from AC power wiring.

H. All “intrinsically safe” wires and cables shall be kept isolated and installed in separate wire channels and conduit systems from normal power and signal wires - by at least two inches of space. Label wire channels and conduits “Intrinsic Wiring”.

I. Instruments shall be mounted upright, vertical, at eye level, and in locations easily and safely accessible. Instruments shall be mounted and installed so that calibration and maintenance can be performed without the need to disconnect signal and power wiring.

J. Equipment supplier shall repair or replace to the Owner's Representative's satisfaction all equipment for which the equipment supplier is responsible and which is damaged during the course of the work.

K. Instrument or control device locations shall be located in "accessible" areas in accordance with manufacturer's recommendations. "Accessible" shall be generally defined as "accessible for maintenance and not infringing on walkways or other means of egress".

L. Displays and Gauges shall be mounted and oriented upright and located to achieve visibility from operation locations.

M. Sufficient clearance shall be allowed for the removal of instrument probes, thermowells, temperature elements, etc.

N. Instrumentation which requires removal for calibration or maintenance shall be installed with sufficient flexible conduit or cable (18" minimum) to provide for easy removal and mounting on a work surface.

O. Equipment supplier shall provide a block valve and a bleed valve for all pressure instruments at the point of connection to the process.

P. Grounding

1. Equipment shall be solidly grounded with an equipment grounding conductor as specified in Section "Grounding" and as recommended by the manufacturer. Control panels and instruments shall be grounded at the power supply end using a ground wire pulled with the power wires.
2. All instruments and transmitters shall be grounded at the device's power source by the Electrical Contractor using a ground wire pulled with the power wires. Metal cases of loop-powered instruments shall be grounded at the control panel powering the loop using a ground wired pulled with the twisted-shielded pair of wires. All transmitters and metal cases shall be grounded at the control panel with a ground wire. Grounding through conduit and fittings and to grounds other than that of the control panel are not acceptable.
3. The shield in twisted-shielded pairs shall be grounded at the power supply end. Meaning, 4-wire transmitters = ground at transmitter end, 3-wire transmitters = ground at power source end, 2-wire transmitters = ground at loop power source end.

Q. Furnish and install all mounting stands, supports structures, brackets and accessories as required or detailed for the installation of the instruments furnished. Unless otherwise specified or required, supports shall be galvanized steel. All mounting hardware shall be stainless steel. Equipment mounted on walls in contact with soil or water shall be mounted offset from the wall a minimum of ¼-inch.

3.4 FIELD QUALITY CONTROL

A. Perform tests in accordance with the following standards:
   1. NETA ATS.

B. Prepare for Acceptance Tests as follows:
   1. After installing equipment but before power supply is energized, verify that grounding system is completed.
   2. Verify that equipment is installed and connected according to the Contract Documents.
   3. Verify that electrical wiring installation complies with manufacturer's submittal by means of point-to-point continuity testing.
   4. Verify that field-installed power and control wiring complies with the Electrical Specification requirements.
   5. Verify that equipment is ready for pre-commissioning checks in accordance with manufacturer's written instructions.

C. Acceptance Tests: After installing equipment and after electrical circuitry has been energized, demonstrate product capability and compliance with requirements as follows:
   1. Perform visual and mechanical inspection and electrical tests according to NETA ATS, Section 7, as it applies to all installed systems and devices. Certify compliance with the following test parameters:
      a. Circuit Breakers: Perform tests and inspections stated in NETA ATS, Section 7.6.
      b. Protective Relays: Perform tests and inspections stated in NETA ATS, Section 7.9.
      c. Instrument Transformers: Perform tests and inspections stated in NETA ATS, Section 7.10.
      d. Metering and Instrumentation: Perform tests and inspections stated in NETA ATS, Section 7.11.
      e. Ground-Fault Systems: Perform tests and inspections stated in NETA ATS, Section 7.14.
      f. Surge Arresters: Perform tests and inspections stated in NETA ATS, Section 7.19.
   2. Correct malfunctioning units on-site, where possible, and retest to demonstrate compliance; otherwise, replace with new units and retest.

3.5 MANUFACTURER’S FIELD SERVICES

A. Engage a factory-authorized service representative to perform the following inspections, checks, and supervision of testing:
   1. Inspect field-assembled components, equipment installation, and electrical connections for compliance with the manufacturer’s installation recommendations and requirements. Mounting, installation, and wiring corrections and adjustments shall be performed by the Electrical Contractor at no additional cost.
   2. Set field-adjustable settings to the values recommended by the equipment manufacturer.

3. Test and adjust controls and safety devices. Replace damaged and malfunctioning controls and components.
4. Supervise tests performed by independent testing firms. Witness initial energization and perform or supervise startup services.
5. Prepare written report to record the following:
   a. Inspections and checks carried out on site.
   b. Test procedures used.
   c. Test results that comply with requirements.
   d. Test results that do not comply with requirements and corrective action taken to achieve compliance with requirements.

3.6 OPERATION & MAINTENANCE MANUALS

A. The Electrical Contractor shall prepare four (4) Operation & Maintenance Manuals as specified in the General Specifications, consisting of equipment manufacturers' O&M manuals, user manuals, installation instructions, configuration instructions, etc., and specified hereinafter. Each shall include:
   1. Index and tabbed section dividers ordering instruments into logical arrangements.
   2. The information for each instrument should include:
      a. The part number of the installed instrument.
      b. All tag numbers associated with the associated part number
      c. O&M specific to the installed instruments.
      d. Reviewed submittals.
      e. Calibration information: Manufacturer's calibration certification, field calibration data and field calibration check data as applicable
      f. Manufacturer's Field Start-up reports as applicable
      g. Manufacturer's instructions on care and operation of equipment.
      h. Warranty certificates.
      i. Spare parts list.
      j. Name, address and telephone number of supplier and representative of manufacturer for each item of equipment in Contract.
   3. Wiring diagrams.
   4. Field adjustable settings (e.g. setpoints, ranges, spans current alarm trips)

B. Bind above items (all unused, clean, and legible) in three ring binders and submit to the Owner's Representative for review and approval. Provide all required copies of reviewed and approved portfolios before request for final acceptance.

3.7 DEMONSTRATION AND TRAINING

A. Engage a factory-authorized service representative to train Owner's maintenance personnel to adjust, operate, and maintain the equipment.
   1. See Section 01 91 13 – "Process Commissioning Requirements"
   2. Train Owner's maintenance personnel for a minimum of 4 hours on procedures and schedules for energizing and de-energizing, troubleshooting, servicing, and maintaining equipment and schedules.
   3. Review data in Operation and Maintenance manuals.
   4. Coordinate and schedule training with Owner, with at least 14 days advance notice.

3.8 FOLLOW-UP SERVICE

A. Monitoring and Adjusting: After Substantial Completion, but not more than twelve months after Final Acceptance, perform the following monitoring and adjusting tasks:

1. Replace failed and defective equipment (under warranty).
2. Recalibrate and reconfigure as necessary.
3. Retest and adjust as necessary.

END OF SECTION

SECTION 26 05 00

ELECTRICAL - GENERAL

PART 1 - GENERAL

1.1 SUMMARY

A. Provide complete, tested and fully functional electrical systems as shown on the Drawings and as specified herein.

B. Electrical equipment and installed systems shall be suitable for the application, shall be safe for the intended use, shall be fully rated for the available fault current, and shall conform to local building codes and statutory requirements.

1.2 SCOPE OF WORK

A. Electrical requirements specified in this Section apply to electrical work provided by all Contracts.

1.3 PROJECT CONDITIONS

A. Electrical equipment shall be suitable for the following environmental ranges unless more stringent requirements are specified elsewhere:

1. Exterior Temperature: -10 to 104 degrees F.
2. Interior Temperature (Winter Treatment Equipment Room): 50 to 104 degrees F.
3. Interior Temperature (Dredge Season Treatment Area): -10 to 104 degrees F.
4. Humidity: Less than 90 percent (non-condensing).
5. Altitude: Not exceeding 500 feet.

B. Allocated Space

1. Electrical equipment shall be installed in the spaces allocated on the Contract Drawings.
2. Subject to review and approval by the Engineer, electrical equipment exceeding the allocated space may be provided.

1.4 DEFINITIONS

A. In addition to the Definitions in the General Conditions, the following definitions apply to Divisions 26 and 28:

1. Acceptance Tests: power distribution and control equipment testing performed in conformance with NETA Acceptance Testing Specification
2. AEIC: Association of Edison Illuminating Companies

3. AHJ: The statutory Authority Having Jurisdiction as defined in NEC Article 100 for enforcement of legally required compliance to local codes, standards, and ordinances.
4. ANSI: American National Standards Institute
5. ASQ: American Society for Quality
6. AWG: American Wire Gauge
7. Cable: an assembly of insulated conductors
8. CFR: Code of Federal Regulations
9. Commissioning: the process of testing system performance after the sequential steps of installation, testing, energization, startup (including initial adjustment and de-bugging) and functional testing of individual pieces of equipment have all been completed
10. Control panel: an electrical enclosure housing control logic devices and an operator control interface
11. Equipment: a general term including appliances, fixtures, apparatus, and the like, used as part of, or in connection with, an electrical installation
12. Fail-safe: Failure of a device without endangering personnel or causing major damage to facilities or the environment.
13. Field test: electrical test carried out on-site
14. Field wiring: on-site installation of raceways and conductors to connect equipment
15. FM: Factory Mutual, Inc.
16. Functional testing: verification of the satisfactory performance of controls under actual operating conditions
17. Furnish and install: same as "Provide" below.
18. HV: high voltage, operating voltage over 600 volts (NEC definition)
19. ICEA: Insulated Cable Engineers Association
20. IEEE: Institute of Electrical and Electronics Engineers, Inc.
21. ISO: International Standards Organization
22. Lineup: with respect to switchgear, switchboards, and motor control centers, a contiguous group of vertical sections with common main busbars.
23. LV: low voltage, operating voltage under 600 volts (NEC definition)
24. Materials: a general term including readily available construction items such as raceways, boxes, fittings, wire, cable, fasteners, hardware and the like.
25. Megger: insulation tester with megohm scale
26. NEC: NFPA 70, the National Electrical Code
27. NETA: InterNational Electrical Testing Association, Inc.
28. NFPA: National Fire Protection Association
29. NICET: National Institute for Certification in Engineering Technologies
30. Nonconformity: The nonfulfillment of a specified requirement (ASQ definition)
31. NRTL: Nationally recognized testing laboratory as defined in 29 CFR 1910.7 as it applies to testing and inspecting for safety in the workplace (OSHA definition)
32. "Or approved equal": proposed "equal" product shall be in conformance with all specified requirements, shall be equivalent in materials of construction to specified manufacturers' products, shall have equal or superior performance in the conditions anticipated for use of the product in this project, and shall be approved by the Engineer
33. OSHA: Occupational Safety and Health Act
34. Panel: with respect to circuit breaker and fuse power distribution centers, panel is equivalent to "panelboard"; with respect to control panels, refers either to the

entire control panel itself or to a steel plate used for mounting devices inside the control panel

35. Provide: All tasks associated with furnishing and installing material and equipment or all tasks associated with furnishing a service including project administration, quality assurance, human resources, tools & equipment, logistics and scheduling, submittals of shop drawings & samples for approval, managing suppliers, purchasing, manufacturing, factory testing, release for shipment, packing, delivery, storage, submittal of coordinated & dimensioned installation drawings for approval, installation, surface preparation & finishes, site testing, startup & commissioning, on-site supervision by equipment manufacturers' representatives, spare parts & tools, Operations and Maintenance (O&M) Manuals, training, guarantees and warrantees, other work described in the Contract Documents, and the Contractor's duties, responsibilities, risks, and liabilities under the Contract.
36. Punch list: document containing descriptions of non-conformities
37. Quality: conformance to specified requirements.
38. Raceways: conduit, and associated boxes and fittings which enclose, support, and protect wires and cables
39. RMS: root mean square
40. Shop drawings: a complete package of manufacturer's equipment drawings, bill of materials, catalog data sheets, performance data, calculations, and other information provided to demonstrate conformance to the equipment specification
41. Substantial Completion: an electrical system may be considered substantially complete when the equipment has passed the specified tests required prior to energization, has been energized, has passed the Electrical Acceptance Tests, and all related Contract requirements have been met except for well-defined minor items which, in the opinion of the Engineer, may be repaired or replaced prior to Final Acceptance without adversely affecting process performance.
42. Substitution: an alternative, nonconforming product proposed by the Contractor in lieu of a specified, conforming product
43. Terminal box: an electrical enclosure containing labeled terminal blocks for connection of wiring
44. UL: Underwriters Laboratories, Inc.
45. VFC: variable frequency controller
46. Wiring: conductors and connections to equipment terminals. 'Wiring' and 'cabling' shall be considered equivalent terms. Fiber optic cables shall be included in the scope of electrical wiring where specified.

1.5 REFERENCE STANDARDS IN EFFECT

A. Notwithstanding revision dates shown in this and other Sections of Divisions 26 and 28, the codes and standards applicable to this project shall be those in effect when bids are submitted.

1.6 QUALITY ASSURANCE

A. In consultation with the equipment and material suppliers, the Contractor shall prepare and submit a Compliance Statement as described in "SUBMITTALS" with each submittal requiring approval.

B. The Engineer's review of a submittal shall not relieve the Contractor of any Contractor responsibilities under the Contract. Review of a submittal that is incomplete, or one that has nonconformities that are not described in the Compliance Statement, followed by the discovery of unapproved nonconformities, will result in replacement of the non-conforming items at no additional cost to the Owner. Substitutions require the approval of the Engineer.

C. Manufacturers of electrical equipment and materials shall have quality certification to ISO 9000:2000 or an equivalent Quality Management System acceptable to the Engineer.

D. Equipment, materials, and installation shall conform to NEC requirements. Equipment and Materials shall be listed and labeled as defined by NEC Article 100 by an NRTL acceptable to the AHJ and marked for intended use.

E. On-site electrical acceptance testing shall be performed as specified in Part 3 of other Sections of the Specification.

F. Manufacturers, manufacturer's representatives, subcontractors, supervisors, installers, and testing agencies shall have qualifications and experience as described in other Sections of the Specification. Qualifications and experience submittals for firms and individuals shall be submitted, re-submitted, or updated whenever requested by the Engineer.

1.7 SAFETY IN THE WORKPLACE

A. Electrical equipment and materials, and the Contractor's installation practices, shall conform to the following:

1. Current edition of OSHA sections of the Code of Federal Regulations (CFR): Part 29 CFR 1910 for General Industry and Part 19 CFR 1926 for Construction Activities
2. NFPA 70, the National Electrical Code
3. Current edition of NFPA 70E, Standard for Electrical Safety Requirements for Employee Workplaces

B. These regulations and standards impose obligations on equipment manufacturers to obtain NRTL certification, listing, and labeling to comply with OSHA (Occupational Safety and Health Act) and Department of Labor regulations.

C. All electrical equipment for which NRTL test procedures have been established shall be certified, listed, and labeled, or otherwise determined to be safe for its intended use, by a NRTL. The absence of a specific reference to NRTL-listing in other Sections shall not relieve the Contractor of the requirement to provide NRTL-listed equipment, and to obtain certification as required by the AHJ in cases where NRTL listing and labeling is not a manufacturer's standard offering for a particular product.

D. Equipment shall not be modified in any manner adversely affecting safety for the intended use, nor shall any equipment be modified on-site without the approval of the manufacturer.

E. Equipment sound levels shall not exceed limits established by reference standards and local regulations. In the absence of reference standards and local regulatory requirements, sound pressure levels shall not exceed 85 dB (A) measured three feet from the equipment.

F. Equipment with moving parts shall be fully guarded in compliance with OSHA rules and regulations.

1.8 INSPECTIONS BY THE AHJ

A. The Contractor shall make arrangements for electrical inspection of the project by the AHJ. Upon completion of the work, final certificate of approval documents shall be submitted to the Engineer for forwarding to the Owner. This certificate shall be submitted prior to request for final payment. The Contractor shall pay all fees required for inspection.

1.9 WORKMANSHIP AND MATERIALS

A. Materials and equipment shall be new and undamaged, shall be marked by the manufacturer, and shall be delivered to the construction site in the original factory packaging.

B. Materials and equipment shall be installed in accordance with the Contract Documents, the manufacturer's installation, operation, and maintenance instructions, and NECA installation standards that have been adopted by ANSI. In the event of apparent conflicts or discrepancies, the Engineer shall be informed of the apparent conflict or discrepancy in writing, and will instruct the Contractor how to proceed.

C. Materials and equipment of the same type, classification or use shall be the products of the same manufacturer.

1.10 RESOURCES AND CONSTRUCTION SCHEDULE

A. The Contractor shall provide sufficient resources, including qualified and experienced project managers, electrical engineers, superintendents, technicians, supervisors, electricians, tools and construction equipment to complete the electrical work in accordance with the activity durations and sequences shown on the Construction Schedule for this project.

1.11 CONTRACT DRAWINGS

A. Electrical drawings are diagrammatic and functional only and are not intended to show exact circuit layouts, number of fittings, or other installation details. The Contractor shall furnish all labor, equipment and materials necessary to install and place in satisfactory operation all power, control, lighting and other electrical systems shown.

B. Conduit schedules generally detail conduit sizes and conductor quantities from the point of origin and do not detail all branches and connections. Contractor shall provide

branches and connections as necessary to facilitate circuit wiring as shown on the one-line diagrams, elementary diagrams, manufacturer's wiring diagrams and as required.

1.12 COORDINATION OF ELECTRICAL WORK WITH OTHER TRADES

A. Electrical work shall be performed in conjunction with the work of other trades. Coordinate electrical installation work with the overall construction schedule. Examine the plans and specifications prior to commencement of work and become familiar with all phases of work involved prior to commencing installation work.

B. The Contractor shall be responsible for coordinating dimensions of equipment and working clearances in accordance with the NEC, and in all cases shall bring to the attention of the Engineer any discrepancies on the plans and in the specifications prior to installation. Any work that installed without conformance to NEC requirements shall be removed and reinstalled at the Contractor's expense. The layout for sleeves, chases, openings, etc., must be arranged prior to construction in order to prevent unnecessary cutting. Examine drawings of other trades for factors affecting electrical work prior to roughing-in raceways, boxes, fittings, and outlets.

1.13 CODES AND STANDARDS

A. All equipment and materials shall be manufactured, tested, and installed in accordance with the National Electrical Code (NEC) and local codes and standards, in accordance with the requirements of the AHJ.

B. In addition, work shall be in accordance with the versions of the following referenced standards in effect at the time of bid opening:

1. American Association for Laboratory Accreditation (A2LA) (establishes NRTL accreditation)
2. American National Standards Institute (ANSI)
3. American Society for Testing and Materials (ASTM)
4. Code of Federal Regulations (29 CFR 1903, 1910, and 1926)
5. Factory Mutual Engineering & Research (FME&R)
6. Illuminating Engineering Society of North America (IESNA)
7. Institute of Electrical and Electronic Engineers (IEEE)
8. Insulated Cable Engineers Association (ICEA)
9. International Building Code (IBC)
10. International Organization for Standardization (ISO)
11. National Electrical Contractors Association (NECA)
12. National Electrical Manufacturers Associates (NEMA)
13. National Fire Protection Association (NFPA)
14. Occupational Safety and Health Act (OSHA)
15. Underwriters Laboratory, Inc. (UL) and other NRTL standards and test procedures

1.14 SUBMITTALS

A. In addition to conforming to the requirements described in the General Provisions. Submittals shall also conform to the requirements herein.

B. One complete shop drawing submittal is required for all equipment and material described in a single Division 26 or 28 Section of the Specification. Incomplete shop drawing submittals, and out-of-sequence shop drawing submittals, will be reviewed to the extent needed to determine incompleteness and out-of-sequence, and returned to the Contractor for re-submission.

C. Compliance Statement: with each Shop Drawing submittal, include a Compliance Statement listing each Specification Section, and Part 1, 2, and 3 Sub-Sections, stating, paragraph-by-paragraph, compliance with the Specification, each minor nonconformity that is within the intent of the Specification, and proposed nonconformities. Provide short description of minor nonconformities, and detailed explanation of other nonconformities.

D. Submittal Format

1. Each submittal shall be accompanied by a transmittal letter showing the submittal category and Specification Section reference number(s). Submittals shall be 3-hole punched and neatly bound in a 3-pin or 3-ring binder. Stapled bindings are not acceptable.
2. Submittals shall have a complete Table of Contents with tabs corresponding to the Table of Contents headings.
3. Submittal transmittal letters shall clearly identify the reason for submittal, e.g., for approval, as manufactured, or as-built / record.
4. Each page of each submittal shall be numbered. Page numbers shall be listed on the Table of Contents. Content shall be printed on 8-1/2 x 11 inch paper, or 11 x 17 paper (folded). Larger size drawings shall be folded and placed in labeled individual clear plastic pockets.
5. Product Data shall be clearly marked to show which items are proposed for this project. Information that does not apply to this project shall be crossed out.

E. Submittal Categories

1. Preconstruction Submittals, including proposed substitutions, supplier and manufacturer qualifications and experience, construction scheduling
2. Shop Drawings, including equipment drawings with a complete bill of materials and supporting manufacturer's catalog data. One separate and complete shop drawing submittal for all of the equipment specified in each Section is required.
3. Product Data, marked to indicate precisely which items are proposed for this project. One complete and separate Product Data submittal for all of the equipment and materials described in each Section requiring a product data submittal, is required. See Submittals requirements in other Sections in Division 26 and 28 to determine if Product Data is to be included in Shop Drawing submittals.
4. Samples, labeled by name, Specification Section and paragraph
5. Design Data, including manufacturer's design calculations, where specified

6. Test Reports, including prototype tests, factory tests, field tests, acceptance tests, and functional tests. A test report is required for each specified test.
7. Certificates, including, welding certificates, factory training certificates for manufacturer's representatives
8. Manufacturer's Installation Instructions, including unloading, hoisting, rigging, short term storage, long term storage, method of field assembly, and other installation instructions
9. Manufacturer's Field Reports, including inspections and training records
10. Operation and Maintenance Manuals, including manufacturer's standard published literature and specially prepared descriptions of operation
11. Closeout Submittals, including black line paper copy of Record Drawings marked in red illustrating changes during construction
12. Spare Parts and Special Tools List

F. Shop Drawings shall be marked with revision blocks to indicate status as follows:

1. FOR APPROVAL
2. AS MANUFACTURED (incorporates Engineer's comments)
3. AS BUILT / RECORD (incorporates on-site modifications)

G. Record Drawings: In addition to requirements in the General Conditions, maintain a full size paper set of "black-line" working drawings throughout the project, and carefully record in red ink changes in the locations and sizes of each major item of electrical equipment, as well as underground conduit routing, to scale. Upon Substantial Completion of the work, deliver the marked-up set of prints to the Engineer. The Engineer reserves the right to withhold final payment until record drawings are received.

H. Operation and Maintenance Manuals: Provide copies of electrical Operation and Maintenance Manuals in conformance with the General Provisions and as specified herein. O&M Manuals shall be organized according to Specification Section numbers. Each copy shall be bound in a durable, 3-ring hardback binder, with data sheets individually punched and reinforced to prevent tearout. Data sheets shall be grouped, and binder dividers shall be provided to match the Table of Contents. Each manual shall have an identifying label on the spine and front cover and shall include the following:

1. Table of Contents
2. Copy of each of the following as applicable
   a. Preconstruction Submittals
   b. Shop Drawings
   c. Product Data
   d. Design Data
   e. Test Reports
   f. Certificates
   g. Manufacturer's Instructions
   h. Manufacturer's Field Reports
   i. Operation and Maintenance Data
   j. Closeout Submittals
   k. Spare Parts and Special Tools
3. Include contract data (names, addresses, telephone numbers, fax numbers, e-mail addresses) for parts and service.

I. Spare Parts and Special Tools List: 90 days prior to the scheduled Substantial Completion date, submit a complete list of spare parts and special tools specified in other Sections of Divisions 26 and 28 to the Owner, and request a time and location for delivery of the spare parts to the Owner.

1.15 OUTAGES

A. Electrical outages: Do not interrupt electrical service to facilities occupied by Owner or in use by other Contractors unless permitted under the following conditions:

1. For Owner occupied facilities, do not proceed with interruption of electrical service without approval from the Owner.
2. For facilities in use by other contractors, coordinate outages so as not to inconvenience or impede the progress of other trades.

1.16 TEMPORARY POWER AND LIGHTING

A. Refer to the General Provisions.

B. Temporary power and lighting shall include all panels, feeders, lighting fixtures, outlets, branch circuits, etc.

C. The Owner's electrical power shall not be used without permission of the Owner.

D. All temporary work shall be in accordance with the NEC, OSHA, and NFPA safety requirements and shall be completely removed upon completion of the project.

PART 2 - PRODUCTS

2.1 EQUIPMENT AND MATERIALS

A. Provide equipment and materials in compliance with other Sections of Division 26 and 28. The requirements in this Section apply to all Sections in Divisions 26 and 28.

2.2 ELECTRICAL IDENTIFICATION

A. Electrical equipment, raceways, boxes, fittings, wires and cables shall be marked in the field in accordance with Division 26 Section “Electrical Identification”.

2.3 ELECTRICAL ENCLOSURES

A. Enclosures for electrical equipment shall be NEMA Type 1 unless otherwise specified and as modified below:

1. In outdoors environments, enclosures shall be NEMA Type 4.
2. In interior process areas, enclosures shall be NEMA Type 4.
3. Where electrical equipment is installed in control panels or other assemblies, no additional enclosures are required except where specifically specified or shown.

4. Lighting fixtures shall be of the type as scheduled on the Drawings.
5. Device, junction, pull boxes and other conduit system accessories shall be as specified in Section headed, “Raceways, Boxes and Fittings”.
6. For motor enclosure requirements, refer to specific equipment sections.

2.4 DISSIMILAR METALS

A. Dissimilar metals shall not be connected, spliced, or joined except where specifically approved in writing by the Engineer. Copper busbars, aluminum busbars, and copper-to-aluminum busbar connections shall be tin-plated at joints and at cable lugs. Bolted electrical conductor connections shall be made with silicone-bronze or grade 3 or better plated steel bolts, nuts, and washers. Belleville washers and tin-plated flat washers shall be used at aluminum-to-copper and aluminum-to-aluminum busbar joints.

2.5 WARRANTIES

A. Warranties (guarantee period) for equipment and materials shall conform to the General Provisions.

B. In cases where the manufacturer offers a longer duration warranty, the manufacturer’s warranty shall remain effective after expiration of the warranty described in the General Provisions.

PART 3 - EXECUTION

3.1 DELIVERY AND HANDLING

A. Materials and Equipment delivered to site shall be handled in accordance with manufacturer's recommendations by experienced riggers, crane operators, and fork lift truck operators.

3.2 STORAGE AND PROTECTION

A. All electrical materials and equipment to be used in construction shall be properly stored and protected against the elements. General construction materials shall be stored in covered trailers. Electrical equipment shall be stored in a clean, dry, indoor location, under cover, until the building is weathertight and the area where the equipment is to be installed has been completed to the satisfaction of the Engineer, including completion of overhead work by other trades.

B. Long term and short term storage instructions of the manufacturer shall be followed.

C. Equipment with anti-condensation heaters shall have the 120VAC anti-condensation heaters energized from temporary 120VAC supplies as soon the factory packaging has been opened.

D. Equipment enclosures exposed to construction damage such as paint spots, spackling, waterproofing, insulation etc. shall be covered and protected against damage.

3.3 INSPECTIONS PRIOR TO CONCEALMENT

A. Raceways embedded in concrete or otherwise concealed shall be inspected in the presence of the Engineer's Representative prior to placement of concrete. Sufficient time shall be allowed to make corrections if required.

3.4 ON-SITE INSPECTIONS AND NONCONFORMITIES

A. Equipment and materials shall be inspected on delivery to site for physical damage and for compliance with the Specification and approved equipment shop drawings.

B. Installed equipment, and materials shall be inspected on completion of installation for compliance with the Contract requirements.

C. A Punch List will be prepared by the Engineer during inspections and testing, and issued to the Contractor for corrective action.

D. Repairs, replacement, and other corrective action shall be completed prior to the scheduled date for Substantial Completion of the project.

3.5 PENETRATIONS AND SEALING

A. Sleeves and rectangular openings shall be provided for raceways provided under this project, and for raceways for future equipment where future equipment is shown on the Drawings. Sleeves and rectangular openings for the passage of raceways shall be sealed after the raceways have been installed. Spare sleeves and rectangular openings shall also be sealed.

B. Penetration of Waterproof Construction: Coordinate the work to minimize penetration of waterproof construction, including roofs and exterior walls. Where penetrations are necessary, provide sleeves and sealing fittings to make each penetration watertight. Conduit sleeves and openings shall be sealed watertight with mechanical seals. Watertightness shall not rely on caulking.

C. Penetration of Fire-Rate Construction: Sleeves and openings in fire-resistant walls and floors for electrical raceways shall be sealed after installation of the raceways with NRTL-certified fire penetration seals, sealant, and fire-rated foam filler products to the same degree of fire resistance (e.g., 1,2, or 4 hours) as the adjacent walls and floors, and to the satisfaction of the AHJ. Where both fire sealing and water sealing is required, mechanical seals with NRTL-listed fire-resistant properties shall be used. Manufacturer’s certification of compatibility shall be provided at the request of the Engineer. For additional penetration requirements, refer to Division 26 Section “Raceways, Boxes, and Fittings”.

3.6 ELECTRICAL SAFETY EQUIPMENT

A. Provide electrical safety equipment, including personal protective equipment, hot sticks, HV gloves, electrical blankets, test instruments, lighting, ventilation, and instructions in

the use of safety equipment, and perform the work under this Contract in accordance with applicable safety rules and regulations. The Contractor's attention is directed to safety issues related to confined spaces as defined in OSHA regulations.

3.7 CLEANING AND PAINTING

A. After installation and wiring work is completed, all dust and debris shall be removed from the interior and exterior of each electrical equipment enclosure by vacuum-cleaning with circuits de-energized. Do not use compressed air for cleaning. Vacuum cleaner wands and brushes shall be non-conducting. Anti-static protection shall be provided for static-sensitive devices.

B. Clean and remove all rust, scale, oil, grease, and dirt from enclosures, conduits, pull, junction and terminal boxes, fittings and hangers.

C. All ferrous materials that are concealed, or exposed, including fittings, hangers, junction, pull and terminal boxes, that are not plated or painted with a factory-applied finish, shall be painted by the Electrical Contractor with one coat of zinc-chromate primer and one finish coat of paint approved by the Engineer. Nonferrous materials shall be cleaned only and left unpainted.

D. Equipment furnished with a factory finish coat shall have finish carefully touched-up where it is scratched or otherwise damaged. Touch-up work shall be match the color and type of the original finish.

3.8 INSPECTION AND TESTING ON-SITE

A. Perform Electrical Acceptance Tests in accordance with NETA Acceptance Testing Specifications ATS-2007 listed in Part 3 of each Section of Division 26.

B. Submit manufacturer-endorsed field test data sheets and procedures for approval, test equipment and materials on-site under the supervision of the Engineer and the equipment manufacturer's factory-trained representative(s), and submit manufacturer's statement of acceptance of installation prior to energization of equipment.

C. Electrical equipment shall not be energized without the approval of the Engineer.

D. A complete certified electrical test report shall be compiled checked for completeness, and submitted for the record.

E. The Contractor shall notify all parties whose presence is necessary for the test; and in all cases, the Engineer shall be notified at least one week prior to the actual test.

3.9 ELECTRICAL POWER DISTRIBUTION SYSTEM FUNCTIONAL TESTS

A. After testing and commissioning for equipment has been completed, the following functional tests of the electrical power distribution and control system shall be carried out by the Contractor in the presence of the Engineer or Owner:

1. Demonstrate manual changeover of power supply for all equipment with dual supply.
2. Simulation of electric utility company power failure: trip incoming supply main circuit breaker and observe automatic transfer of load to the standby generator set. Leave normal electric utility supplies off for 2 hours and note any abnormal operation of electrical devices.
3. Restoration of electric utility company power: restore incoming supplies and observe automatic re-transfer of load.
4. Using a precision laboratory voltmeter with certified 0.1% accuracy, record incoming supply voltages for each motor control center in the presence of the Engineer's Representative. Measurements shall be taken under no-load and normal load conditions. Readings which indicate more than 1% voltage difference between phases will required corrective action.
5. Using a precision harmonic voltage and current measuring and recording instrument, measure the total harmonic voltage distortion at each motor control center main busbars. Measurements shall be taken at two or three different operating load conditions determined by the Engineer.

B. Additional testing shall be carried out where recommended by manufacturer or requested by the Engineer.

3.10 LOAD BALANCING

A. Single phase circuits connected to three-phase panelboards shall be balanced initially based on the load data. Load currents shall be measured under actual operating conditions, and under conditions described by the Engineer. Circuiting shall be re-arranged as necessary to obtain current balancing within 10% on each busbar under normal operating conditions.

3.11 TRAINING

A. Upon completion of all work furnished and installed under Divisions 26 and 28 instruct and train the Owner's personnel in the operation and maintenance of all equipment to the complete satisfaction of the Engineer. Training shall be as specified in each Section of Divisions 26 and 28, and shall start when the completed systems have been put in operational condition and tested as specified.

B. Training shall take place at the project site at times convenient to the Owner. A complete Training Course syllabus shall be submitted with a Contractor's proposed schedule for instruction and training.

C. Provide classroom and on-site training of the Owner's personnel by an authorized representative of the equipment manufacturer during commissioning of the following electrical equipment:

1. Motor control centers
2. Variable frequency controllers
3. Generator set

4. Security System
5. Instrumentation
6. SCADA equipment including programmable logic controllers, operator interface terminals and networking equipment

END OF SECTION

SECTION 26 05 13

ELECTRIC MOTORS

PART 1 - GENERAL

1.1 SUMMARY

A. Provide electric motors in conformance with this Section for electric motor-driven equipment specified in other Sections of the Specification.

B. This Section describes requirements for horizontal and vertical 3-phase squirrel cage induction motors up to nominal 500 HP in NEMA standard frame sizes.

1.2 RELATED DOCUMENTS

A. AC submersible pump motor, hermetic compressor motor, DC motor, valve actuator motor, and single phase motor requirements are specified in other Sections of the Specification.

1.3 DEFINITIONS

A. The following definitions apply to this Section:

1. ABMA: American Bearing Manufacturers Association
2. AFBMA: Anti-Friction Bearing Manufacturers Association (former name of ABMA)
3. ANSI: American National Standards Institute
4. BHP: brake horsepower
5. HP: horsepower
6. IEEE: Institute of Electrical and Electronic Engineers
7. IP: International Protection Code
8. NEMA: National Electrical Manufacturers Association
9. NFPA: National Fire Protection Association
10. NRTL: Nationally Recognized Testing Laboratory
11. ODP: Open drip-proof
12. ODP FG: Open drip-proof, fully guarded
13. PWM: pulse-width modulated
14. TEFC: Totally enclosed fan-cooled
15. TENV: Totally enclosed non-ventilated
16. Vpeak: single amplitude zero-to-peak line-to-line voltage
17. Vrated: nameplate line-to-line voltage
18. VFD: variable frequency drive

1.4 CODES AND STANDARDS

A. Equipment and installation shall be in accordance with the latest revisions of the following codes and standards:

1. NEMA Standard MG1-2003 (Rev. 1 – 2004) Motors and Generators
2. ANSI / IEEE Standard 112 Standard Test Procedure for Polyphase Induction Motors and Generators
3. IEEE 841 Standard for Petroleum and Chemical Industry - Severe Duty Totally Enclosed Fan-Cooled (TEFC) Squirrel Cage Induction Motors - Up to and Including 370 kW (500 hp)
4. NEC: National Electrical Code (NFPA 70)
5. Underwriters Laboratories, Inc. (UL)

1.5 QUALITY ASSURANCE

A. Motors shall be designed, manufactured, and tested in accordance with the Codes and Standards referenced in this Section.

B. Motor manufacturers shall have quality certification to ISO 9001:2000, or an equivalent quality management system acceptable to the Engineer.

1.6 SUBMITTALS

A. Motor submittal data shall be included with the mechanical equipment shop drawing and product data submittals.

B. The motor portion of shop drawing and manufacturer's product data submittals, for mechanical equipment specified in other Sections, shall include the following:

1. Motor assembly drawings with the following information:
   a. Enclosure type with degree of protection (IP rating)
   b. Materials of construction of housing, stator, rotor, fan, fan guard
   c. Bearing types, bearing construction, shields and seals
   d. Lubrication system
   e. Location of lubrication fittings
   f. Location and type of breathers and drains for totally enclosed motors
   g. Internal and external coatings
   h. Direction of rotation
   i. Electrical wiring diagrams for connection of windings and accessories
2. Motor specification data sheets with the following motor nameplate information:
   a. Manufacturer's type and frame designation
   b. Horsepower output
   c. Time rating
   d. Maximum ambient temperature for which the motor is designed
   e. Insulation system designation
   f. Full load RPM
   g. Voltage(s)
   h. Frequency
   i. Number of phases
   j. Full load amperes
   k. NEMA Code Letter for locked-rotor amperes (or locked rotor amperes)
   l. NEMA nominal efficiency
   m. Motor service factor for sine wave applications

n. Designation “Thermally Protected” or “OVER TEMP PROT – [type number per NEMA MG1]” (as applicable)
o. ABMA bearing ID number(s)

3. Inverter Duty motor data sheets shall include the following additional information:
   a. Motor service factor for PWM variable frequency drive applications
   b. Motor winding insulation impulse voltage rating
   c. Bearing insulation
   d. Shaft grounding details
4. Where specified in other Sections of the Specification, and for motors 200 HP and larger, submit motor guaranteed minimum efficiency data at ½, ¾ and full load.
5. Submittals shall include information for all specified motor options, with sufficient detail to demonstrate that the motor is suitable for the drive application, including but not limited to the following:
   a. Winding over-temperature protection devices
   b. Anti-condensation heaters
   c. Condensation drains (totally enclosed motors only)
   d. Shaft and bearing seals
   e. Anti-backspin ratchets
   f. Thrust bearings
   g. Oil lubrication accessories
   h. Hollow or solid shaft details
   i. Coupling and drive pulley details
   j. Mounting base details
6. Factory Test Reports
7. Manufacturer’s Installation Instructions: including manufacturer’s shipping, receiving, handling, rigging, storage and setting instructions, recommendations, cautions, and warnings. Provide foundation details showing structural steel, concrete, anchor bolt, and grouting details.

PART 2 - PRODUCTS

2.1 DRIVE APPLICATION

A. Motors shall be selected by the driven equipment manufacturer for the drive application, and for operation within the motor nameplate horsepower rating without applying the service factor.

B. Motors shall have output torque characteristics, direction of rotation, rotational speed, dimensions, bearings, and accessories suitable for the drive application. Motor output shaft dimensions and keyway shall be suitable for connection to the driven equipment coupling.

C. Motors shall be capable of successfully accelerating inertial loads tabulated in NEMA MG1-1998 Section 12.54 without injurious heating. In cases where the actual load inertia exceeds, these values, the driven equipment manufacturer shall select a larger motor capable of successfully accelerating the inertial load without injurious heating.

D. Motor continuous output horsepower shall be limited to the 1.0 service factor rating.

2.2 VOLTAGE RATINGS

A. Motors ½ HP and larger shall be 460 V three phase 60 Hz, unless otherwise indicated.

B. Motors 1/3 HP and smaller shall be 120 V single phase 60 Hz, and shall be suitable for the drive applications described in other Sections.

2.3 EFFICIENCY

A. Motors shall have nominal efficiencies in accordance with NEMA MG1-2003 Table 12-12 Full-Load Efficiencies for NEMA Premium™ Efficiency Electric Motors Rated 600 Volts or Less (Random Wound).

B. Motor efficiencies shall be determined in conformance with IEEE 112 Method B.

2.4 STATOR WINDINGS AND INSULATION

A. Motors shall have moisture-resistant Class F insulated copper stator windings. Motors shall be designed for both full-voltage and reduced-voltage starting. Additional requirements apply to VFD applications, refer to INVERTER DUTY MOTORS.

B. Motors shall have 1.15 minimum service factor (on sine wave power), and Class B temperature rise when operated at rated HP at 1.0 service factor.

C. Non-inverter-duty motors shall have minimum peak impulse voltage rating Vpeak = 1000 V, with rise time as short as 2 microseconds, in accordance with NEMA MG1-2003 30.2.2.8.

D. Motors 500 HP and smaller shall have stall times of 12 seconds minimum when initially at normal operating temperature, in conformance with NEMA MG1-2003 12.49.

2.5 INVERTER DUTY MOTORS

A. Motors operating on variable frequency drives shall be “inverter duty” type, with minimum peak impulse voltage rating Vpeak = 3.1 times Vrated with rise time as short as 0.1 microseconds, and in accordance with NEMA MG1-2003 31.4.4.3 recommendations, to provide long insulation life when operating on PWM variable frequency controller output voltage waveforms.

B. Inverter duty motor bearings shall be insulated on one or both ends to prevent bearing element damage from stray electrical currents, as described in NEMA MG1-2003 31.4.4.3. Provide motor shaft grounding brush(es) to drain stray rotor currents to the motor electrical equipment grounding conductor connection point.

C. Inverter duty motors shall be fitted with winding over-temperature accessories as described in WINDING OVERTEMPERATURE PROTECTION.

D. Include available “skip-frequency” information and VFD setting recommendations with submittal data.

2.6 DEGREE OF PROTECTION

A. Motors housings shall have enclosures with degree of protection ratings as specified in the mechanical equipment Sections of the Specification.

B. In the absence of motor enclosure degree of protection ratings specified in other Sections of the Specification, the following degrees of protection shall apply:

1. Outdoor Areas: severe-duty TEFC or TENV to IEEE 841.
2. Corrosive and Chemical Areas: severe-duty TEFC or TENV to IEEE 841.
3. Clean, Dry, Indoor Areas (not including Process Areas): ODP FG (IP32).
4. Indoor Process Areas (including rooms containing pumps and process equipment): TENV or TEFC (IP55)

2.7 MOTOR FRAMES

A. Motor frames shall be NEMA standard sizes. Open motors over 5 HP, enclosed motors (not severe duty) over 2 HP, severe-duty and explosion-proof motors shall have cast iron frames.

2.8 AMBIENT CONDITIONS

A. Motors shall have NEMA standard horsepower ratings for continuous duty under the following environmental conditions:

1. Ambient Temperature: -25 to +40 deg. C.
2. Altitude: Not exceeding 3300 feet (1000 m).

B. Motors shall be suitable for any unusual service conditions indicated on the Drawings, or in other Sections of the Specification.

2.9 COOLING

A. Motors shall be air-cooled, with internal or external fans. Variable speed motors shall be suitable for operation over a 4:1 speed range without separate method of cooling.

B. Motors with speed ranges greater than 4:1 shall be fitted with separate electric motor-driven forced-air cooling to prevent overheating when running continuously at the lowest specified operating speed.

2.10 INRUSH CURRENT

A. Motors over 20 HP shall have inrush current equivalent to NEMA Code G, or lower.

2.11 MAXIMUM SPEED

A. Unless otherwise indicated, motor synchronous speeds shall not exceed 1800 RPM.

2.12 NAMEPLATES

A. Provide stainless steel motor nameplates with engraved or stamped markings in accordance with NEMA standards, and including the information specified in SUBMITTALS.

2.13 ROTORS

A. Rotors shall be aluminum or copper, designed for 125% rotational speed in either direction without distortion or damage, and shall be statically and dynamically balanced as described in VIBRATION LIMITS.

2.14 BEARINGS

A. Motors shall have re-greasable anti-friction bearings as recommended by motor manufacturer for the application. Oil lubricated ring, sleeve, and plate bearings shall be permitted only for special applications as specified in the mechanical equipment Section of the Specification, and for vertical hollow-shaft motors as described below.

B. Motors shall have radial bearings and thrust bearings designed to carry all of the loads imposed on the motor in service.

C. Grease fittings and either drain plugs or grease pressure relief fittings shall be provided for each bearing.

D. Anti-friction bearings shall have minimum calculated ABMA L-10 life of 100,000 hours for flexible direct-coupled applications, and minimum calculated ABMA L-10 life of 26,280 hours in belt drive applications. Provide motors with longer calculated bearing life where indicated in other Sections of the Specification.

E. Vertical hollow-shaft motors shall be equipped with oil lubricated spherical roller thrust bearings with oil reservoirs and visual indication of oil level, and lower grease lubricated radial guide bearings. Sufficient oil shall be provided to fill the oil reservoir(s) plus any additional oil required for one refilling. The oil shall be in a properly identified container. Running fit adjustment shall be provided by means of a lockable nut at the top of the shaft. Provide anti-backspin ratchets to prevent reverse rotation.

2.15 VIBRATION LIMITS

A. For standard motors, unfiltered motor vibration velocities shall not exceed the limits in NEMA MG1 Table 7-1 when measured in accordance with Part 7 of NEMA MG1.

B. For severe duty motors, unfiltered motor vibration velocities shall not exceed the limits in IEEE Standard 841-2001 6.9.

C. Special motor vibration limits, when required for the application, shall conform to the requirements of the manufacturer of the driven equipment.

2.16 TERMINAL BOXES

A. Open motor terminal boxes shall be gasketed ferrous metal or cast iron, with diagonally split bolted cover.

B. Enclosed motor terminal boxes and covers shall be cast iron, with diagonally-split bolted cover, gaskets or O-rings to IP55, and NPT-threaded conduit entry.

C. Terminal boxes shall be suitable for top, bottom, drive end or non-drive end conduit entry by removing terminal box mounting bolts and rotating terminal box in 90 degree increments. Coordinate conduit entry quantities and sizes with motor branch circuit conduit sizes.

D. Provide grounding lug inside terminal box for NEC-sized equipment grounding conductor.

2.17 PROTECTION AGAINST CONDENSATION

A. Totally enclosed motors shall be fitted with breathers and condensation drains.

B. Provide anti-condensation heaters for motors where specified in the mechanical equipment Sections of the Specifications. Alternatively, the requirement for anti-condensation heaters may be waived by the Engineer if the motor is manufactured with an encapsulated or sealed insulation system capable of passing the conformance tests in NEMA MG1-2003 12.62.

2.18 WINDING OVER-TEMPERATURE PROTECTION

A. Motor winding over-temperature shall be provided for motors in variable frequency drive applications, for motors over 200 HP in constant speed applications, and where specified in the mechanical equipment Sections of the Specification.

B. Motor winding over-temperature devices shall be as follows:

1. Motors 300 HP and smaller: a minimum of three normally closed winding over-temperature switches, one in each phase. Switches shall open at the permissible temperature rise for the insulation class in accordance with NEMA MG1-2003 31.4.1.2.

2. Motors over 300 HP: a minimum of three 120 ohm RTD’s, complete with temperature controller for mounting in the motor controller enclosure unless otherwise indicated.

3. Thermistor protection will only be permitted when specified in the mechanical equipment Sections of the Specification, and when specified, shall be provided complete with power supply and control devices for mounting in the motor controller enclosure.

2.19 PROTECTION AGAINST EXCESSIVE VIBRATION

A. Motor vibration protection systems: provide when vibration monitoring or shutdown is specified in the mechanical equipment Sections of the Specification.

B. Vibration sensors, and alarm and shutdown setpoint controllers, shall be as recommended by the driven equipment manufacturer for the application.

C. For cooling tower applications, the cooling tower manufacturer's standard vibration protection device(s) will be acceptable.

2.20 REQUIRED ACCESSORIES

A. Belt-drive motor applications: adjustable motor mounting bases.

B. Motors over 100 HP: oversize terminal boxes.

C. Motors over 200 HP: insulated busbar terminal connections, with holes drilled to accept NEMA standard two-hole lugs.

2.21 FACTORY TEST REPORTS

A. Motors through 200 HP: routine test, reported on IEEE 112 Annex B routine test form.

B. Motors over 200 HP: in addition to the routine test, provide factory heat run, efficiency, and power factor tests, reported on IEEE 112 Annex C test form.

PART 3 - EXECUTION

3.1 INSTALLATION

A. Install motors in accordance with the motor and mechanical equipment manufacturers' recommendations.

END OF SECTION

SECTION 26 05 19

WIRE AND CABLE

PART 1 - GENERAL

1.1 SUMMARY

A. Provide a complete system of wiring and cabling, including wire and cable pulling, splicing, terminations and accessories, as shown on the Drawings and in conformance with the requirements in this Section and Division 26 Section “Electrical - General”.

1.2 DEFINITIONS

A. In addition to the definitions in Division 26 Section “Electrical - General”, the following definitions apply to this Section:

1. THHN: NEC and UL designation for flame-retardant and heat resistant thermoplastic insulation, gas and oil resistant nylon jacketed, suitable for dry locations only, 90 deg. C. max in dry locations
2. THWN: NEC and UL designation for flame retardant and moisture-resistant thermoplastic insulation, gas and oil resistant nylon jacketed, suitable for dry and wet locations, 75 deg. C. max in wet locations
3. TSP: twisted shielded pair

1.3 REFERENCE STANDARDS

A. Conform to the following standards in effect at the time of bid submittal:

1. AEIC CG5-90 Underground Extruded Power Cable Pulling Guide
2. ICEA P-51-432-1970 Copper Conductors, Bare & Weather Resistant
3. ICEA S-58-679-1996 Standard for Control Cable Conductor Identification
4. ICEA S-95-658 / NEMA WC70 Non-Shielded Power Cables Rated 2000 V or Less
5. ICEA T-22-294-1983 Test Procedures for Extended Time-Testing of Wire and Cable Insulations for Service in Wet Locations
6. IEEE 576-2000 Recommended Practice for Installation, Termination, and Testing of Insulated Power Cable as Used in Industrial and Commercial Applications
7. UL 44 Thermoset–insulated Wires and Cables
8. UL 62 Flexible Cord and Fixture Wire
9. UL 83 Thermoplastic Insulated Wires and Cable
10. UL 486A Wire Connectors and Soldering Lugs for Use with Copper Conductors
11. UL 486C Splicing Wire Connectors
12. UL 486D Insulated Wire Connector Systems for Underground Use in Damp or Wet Locations
13. UL 493 Thermoplastic Insulated Underground Feeder and Branch Circuit Cables

1.4 SUBMITTALS

A. Product Data: For each type of product specified herein, including catalog data, technical specifications, evidence of UL listing, and evidence of manufacturer's certification to ISO 9000:2000 or an equivalent quality management system certification acceptable to the Engineer.

B. Samples: 16-inch lengths of each size and type of wire and cable, mounted on a sample board of 1/2 inch AC exterior plywood painted white when requested.

C. Electrical Acceptance Test reports.

D. Operation and maintenance data is not required, however, approved shop drawing submittals are required to be included for the record in the Operation and Maintenance Manuals, as described in Division 26 Section "Electrical - General".

PART 2 - PRODUCTS

2.1 APPLICATIONS

A. Refer to Part 3 for wire and cable applications.

2.2 BUILDING WIRE

A. Manufacturers:
1. American Insulated Wire Corp.
2. Belden Wire and Cable Co.
3. Cerro Wire and Cable Co., Inc.
4. General Cable Industries Inc.
5. Okonite Co.
6. Pirelli Cable Corp.
7. Southwire Co.
8. Or approved equal.

B. Conductor Material: Copper, stranded conductor.

C. Building Wire Insulation Types: Type THHN-THWN.

2.3 INSTRUMENTATION WIRE AND CABLE

A. Manufacturers:
1. Belden Wire and Cable Co.
2. Clifford of Vermont / TVC
3. General Cable Co., Inc.
4. Okonite Co.
5. Southwire Co.
6. Or approved equal.

B. Twisted Shielded Pair:

1. 300 V TFFN insulated #16 AWG stranded tinned copper twisted pair (unless otherwise shown), with #18 AWG or larger stranded tinned copper drain wire, overall aluminum-on-mylar shield (100% coverage), with chrome PVC outer jacket. NRTL listed and suitable for installation in conduit, cable tray, and direct burial.

C. Ethernet Cable

1. Four pair, polyolefin insulated #24 AWG solid copper conductors, unshielded with overall PVC jacket. Belden catalog no. 1583A or equal.

2.4 WIRE AND CABLE CONNECTORS AND SPLICES

A. Manufacturers:

1. 3M Company, Electrical Products Division
2. AMP Incorporated / Tyco International
3. Burndy
4. Square D
5. Thomas and Betts
6. Or approved equal.

B. Description: Factory fabricated connectors and splices of size, ampacity rating, material, type, and class for application and service indicated.

C. Wirenuts: Spring type rated for copper wire, sized for the actual number of wires connected.

D. Splices: Tin-plated copper compression type. Pre-insulated crimp-on connectors may be used for #14 AWG control wires. Long barrel splices shall be used for #1/0 AWG and larger.

E. Connection lugs: Tin-plated copper compression type with NEMA drilling. Long-barrel lugs shall be used for #1/0 AWG and larger wire, and for ground wires as specified in Division 26 Section "Grounding".

F. Connections at molded case circuit breakers, disconnect switches, and other equipment provided with wire termination lugs: NRTL-listed, suitable for use with the copper wire size to be connected.

PART 3 - EXECUTION

3.1 INSPECTION

A. Ensure that conduits, boxes, fittings and equipment are clean and clear of construction debris prior to installation of wire and cable.

3.2 DELIVERY, STORAGE, AND HANDLING

A. Deliver wire and cables to construction site and unload in accordance with manufacturer's recommendations.

B. Store and transport reels in conformance with the manufacturer's printed instructions.

C. Wire and cable ends shall be taped watertight until terminations and splices are completed.

3.3 BUILDING WIRE APPLICATIONS

A. Feeders: Type THHN-THWN, single conductors in raceway.

B. Branch Circuits: Type THHN-THWN, single conductors in raceway.

C. Equipment Grounds: Type THHM-THWN, single conductors in raceway.

D. Control Circuits: TypeTHHN-THWN, single conductors in raceways.

3.4 CABLE LAYING AND PULLING

A. Install cables in accordance with manufacturer's installation instructions, IEEE 576 and AEIC CG5-90.

B. Install wires and cables in raceways as shown on the Drawings and as specified in Division 26 Section "Raceways, Boxes, and Fittings".

C. Pull wire and cables in accordance with the manufacturer's installation recommendations and requirements, with emphasis on the following:

1. Do not exceed manufacturer's recommended maximum pulling tensions and side-wall pressure values
2. Lubricate cables with pulling compound or lubricant that is approved by the cable manufacturer and will not deteriorate conductor or insulation materials of construction.
3. Follow cable manufacturer's recommendations for attaching pulling means to cables, including fish tape, cable, rope, and basket-weave cable grips. Do not attach to cable jacket alone for pulling.
4. Rig pulleys and use pull ropes for pulling cables into raceways.
5. Use tension indicators and electric-motor driven capstan rollers for pulling cables that are too large for pulling by hand.
6. Observe manufacturer's recommendations for the minimum wire and cable bending radius for each type and size of wire and cable provided for this project.

D. In enclosures, pull boxes and junction boxes, route cables around perimeter from entry to exit, and support cables at intervals adequate to prevent sagging.

E. Identify and color-code conductors and cables according to Division 26 Section "Electrical Identification."

3.5 WIRE AND CABLE CONNECTIONS AND TERMINATIONS

A. Tighten electrical connectors and terminals according to the manufacturer's published torque tightening values. If manufacturer's torque values are not indicated, use those specified in UL 486A and UL 486B.

B. For compression lugs and splices, use the lug manufacturer’s compression tools and conform to the manufacturer’s written instructions.

C. Control wires shall be run from terminal to terminal without splices, and no more than two wires under a terminal screw.

D. Splices and terminations shall be insulated with boots, heat shrink tubing, or tape to 600 volts in accordance with the insulation product manufacturer’s written instructions.

E. Feeder taps shall be made with cast bronze 2-bolt or 4-bolt connectors with built-in conductor spacer, suitable for the run and tap conductor sizes. Split bolt connectors shall not be used unless approved by the Engineer.

F. Wiring at Device Outlets: Install conductor at each outlet, leaving 8 inches of wire coiled in the box for connection to wiring devices. Wiring devices that are suitable for solid wire only shall be pigtailed to stranded wire with solid wire 6 inches long using wirenuts.

G. Install a green insulated NEC-sized grounding jumper from a green ground screw in the outlet box to the receptacle or switch green ground screw.

H. Wiring to terminals at transformers and busbars shall be connected with tin-plated copper compression connectors and insulated for 600 volts with tape, boots, or heat-shrink tubing rated for the temperature specified by the equipment manufacturer. Two hole lugs shall be used for power cable terminations # 1/0 AWG and larger.

I. Building wire connections to flexible motor leads shall be made with compression connectors bolted back-to-back with silicone-bronze bolts and insulated for 600 volts.

J. Shielded cable conductors shall be terminated with insulated crimp-on connectors suitable for the terminals provided with the equipment, or tinned for connection to terminals which are not suitable for crimp-on connectors. Connect drain wire to ground at the transmitter end only unless otherwise indicated.

3.6 ELECTRICAL ACCEPTANCE TESTING

A. Referenced sections in NETA ATS include inspection procedures to verify physical condition. They also include tests and measurements of insulation resistance of installed conductors.

B. Perform the following field quality control testing:

1. After installing conductors and cables and before electrical circuitry has been energized, test for conformance with requirements.
2. Perform each electrical test and visual and mechanical inspection stated in NETA Acceptance Testing Specification, Section 7.3.2 "Cables, Low Voltage, 600 Volt Maximum". Certify conformance with test parameters.

C. Prepare a written report to record the following:

1. Test procedures used.
2. Test results that conform to requirements.
3. Test results that do not conform to requirements and corrective action taken to achieve conformance with requirements.

END OF SECTION

SECTION 26 05 26

GROUNDING

PART 1 - GENERAL

1.1 SUMMARY

A. Provide system and equipment grounding in accordance with NEC requirements, in conformance with this Section and as shown on the Drawings.

1.2 DEFINITIONS

A. Refer to NEC for definitions of grounding terms used in this Section.

1.3 REFERENCE STANDARDS

A. Comply with the following standards:

1. IEEE 142-1991 Recommended Practice for Grounding of Industrial and Commercial Power Systems (IEEE Green Book)
2. IEEE 1100-1999 IEEE Recommended Practice for Powering and Grounding Electronic Equipment. (IEEE Emerald Book)
3. IEEE C57.13.3-1983 (R1990) Guide for the Grounding of Instrument Transformer Secondary Circuits and Cases
4. IEEE C57.13.3-1983 (R1991) Guide for the Grounding of Instrument Transformer Secondary Circuits and Cases
5. NFPA 70 The National Electrical Code

1.4 SUBMITTALS

A. Product Data: Submit manufacturer's catalog data and specification sheets for each manufacturer's product described in Part 2 of this Section, marked to show which products are proposed for this project.

PART 2 - PRODUCTS

2.1 MANUFACTURERS

A. Manufacturers: Subject to compliance with the requirements described in this Section, provide products by one of the listed manufacturers in the Sub-Sections below.

1. Grounding connectors:
   a. Dossert Corp.
   b. Framatome Connectors / Burndy
   c. Harger Lightning and Grounding, Inc.
   d. ILSCO
   e. O. Z. Gedney / EGS Electrical Group
   f. Panduit Corp.
   g. Robbins Lightning, Inc.

2.2 BONDING JUMPERS

A. Main Bonding Jumpers: copper, furnished with the building incoming feeder equipment by the equipment manufacturer.

B. Equipment Bonding Jumpers: insulated copper building wire, sized to match the largest equipment grounding conductor in the associated conduits.

C. Bonding Jumper: insulated copper wire, protected by conduit where exposed to physical damage

2.3 EQUIPMENT GROUNDING CONDUCTORS

A. Equipment Grounding Conductors: Insulated building wire in accordance with Division 26 Section "Wire and Cable". #6 AWG and smaller shall have green insulation, #4 AWG and larger shall have green insulation or shall be marked with green tape at each end.

2.4 CONNECTOR PRODUCTS

A. Comply with IEEE 837 and UL 467. Products shall be NRTL-listed and shall be suitable for use for specific types, sizes, and combinations of conductors and connected items.

B. Bolted Connectors: two-hole long barrel tin-plated copper compression type at equipment busbars.

C. Wirenuts: Use only for branch circuit wiring in switch and receptacle outlet and junction boxes containing #10 AWG and smaller wires.

PART 3 - EXECUTION

3.1 INSTALLATION – GENERAL

A. Install main bonding jumpers, equipment grounding conductors, equipment bonding jumpers, and bonding, in accordance with NEC requirements and as shown on the Drawings.

B. Provide only copper and bronze grounding materials in direct contact with earth, concrete, masonry, crushed stone, and similar materials.

C. Make connections so galvanic action or electrolysis possibility is minimized. Select connectors, connection hardware, conductors, and connection methods so metals in direct contact will be galvanically compatible.

1. Use electroplated or hot-tin-coated materials to ensure high conductivity and to make contact points closer to order of galvanic series.
2. Make connections with clean, bare metal at points of contact.
3. Coat and seal connections having dissimilar metals with inert material to prevent future penetration of moisture to contact surfaces.

D. Electrical systems shall be grounded at one location only. This location shall be as follow:

1. Transformer supplied systems serving building shall have their neutral conductors grounded at the building incoming feeder equipment by means of a main bonding jumper.
2. Generator supplied systems shall have their neutral conductors solidly connected to the system they supply. Neutral conductors shall not be grounded at the generator.
3. Transformer supplied systems serving panelboards shall have their neutral conductors grounded at the transformer in accordance with the Division 26 Section "Dry Type Transformers (600V and less)".
4. Control power transformer secondaries shall be grounded at the transformer. Provide bonding jumper from transformer neutral connection to the enclosure of the equipment the transformer is installed.

E. Metal raceways shall be electrically continuous to form a grounding path. This shall include conduit connections to junction boxes, pull boxes, outlet boxes and electrical enclosure. Where circuit conductors are installed in both conduit and cable tray, the conduit shall electrically continuous with the cable tray. Provide equipment bonding jumpers as necessary for continuity.

3.2 INSTALLATION: EQUIPMENT GROUNDING CONDUCTORS

A. Provide separate insulated equipment grounding conductors in raceways, boxes, and fittings, as shown on the Drawings and specified herein.

B. Equipment Grounding Conductor Terminations:

1. At dry-type transformers, provide two-hole long-barrel tin-plated compression connector bolted to ground busbars with tin-plated or silicone bronze bolts.
2. At panelboards and motor control centers, provide two-hole long-barrel tin-plated compression connector bolted to ground busbar(s) with tin-plated or silicone bronze bolts.
3. At generators, provide separate two-hole long-barrel tin-plated compression connector bolted to ground connection point in generator terminal box, and to generator structural steel frame, with tin-plated or silicone bronze bolts.

3.3 INSTALLATION: EQUIPMENT BONDING JUMPERS

A. At sheet metal junction, pull and outlet boxes, and electrical enclosures, use conduit hubs bolted to enclosure or double locknuts to bond enclosure to conduit, and connect grounding bushings to equipment grounding conductors. Install equipment bonding jumpers between conduit bushings entering and leaving boxes, using the lugs provided with the grounding bushings.

B. At cast enclosures, connect equipment grounding conductors together with a mechanical connector. Use connection lugs in conformance with Division 26 Section "Wire and Cable".

C. Equipment Grounding Conductor Terminations: For No. 8 AWG and larger, use pressure-type grounding lugs. No. 10 AWG and smaller grounding conductors may be terminated with winged pressure-type connectors.

D. Metal Poles Supporting Outdoor Lighting Fixtures: Provide grounding as detailed on the Drawings.

3.4 INSTALLATION: MAIN BONDING JUMPERS

A. Install main bonding jumpers at the building incoming feeder equipment in accordance with equipment manufacturer’s written instructions.

3.5 INSTALLATION: BONDING JUMPERS

A. Bonding Straps and Jumpers: Install so equipment vibration is not transmitted to rigidly mounted equipment support structure. Use long-barrel tin-plated compression connectors and galvanized steel or silicone bronze hex head cap screws in drilled and tapped holes to bond miscellaneous equipment to equipment grounding conductors.

3.6 CONNECTIONS

A. Tighten screws and bolts for grounding and bonding connectors and terminals according to manufacturer's published torque-tightening values. If manufacturer's torque values are not indicated, use those specified in UL 486A.

B. Compression-Type Connections: Use hydraulic compression tools to provide correct circumferential pressure for compression connectors. Use tools and dies recommended by connector manufacturer. Provide embossing die code or other standard method to make a visible indication that a connector has been adequately compressed on grounding conductor.

END OF SECTION

SECTION 26 05 33

RACEWAYS, BOXES, AND FITTINGS

PART 1 - GENERAL

1.1 SUMMARY

A. Provide a complete system of raceways, including conduit, fittings, junction boxes, hangers, supports, and accessories, as shown on the Drawings and specified herein.

1.2 DEFINITIONS

A. In addition to the definitions in Division 26 Section “Electrical - General”, the following definitions apply to this Section:

1. Clamp-back: spacer used with conduit one-hole strap to provide air gap between surface and conduit
2. EMT: Electrical metallic tubing (NEC definition)
3. EPDM: Ethylene-propylenediene terpolymer rubber
4. Equipment bonding jumper: suitable for connecting sections of conduit used for equipment grounding conductor (see NEC definition)
5. FMC: Flexible metal conduit (NEC definition)
6. FRP: fiberglass reinforced plastic
7. ID: inside diameter
8. LFMC: Liquidtight flexible metal conduit (NEC definition)
9. NBR: Acrylonitrile-butadiene rubber
10. NPT: National pipe thread
11. OD: outside diameter
12. PVC: Polyvinyl chloride
13. RGS: Rigid galvanized steel conduit
14. RMC: Rigid metal conduit (NEC definition)

1.3 REFERENCE STANDARDS

A. Comply with the following standards:

1. NEMA Standards applicable to raceways, boxes, and fittings.
2. UL Standards applicable to raceways, boxes, and fittings. Each raceway, box, and fitting shall be NRTL-listed and labeled.
3. ANSI and ASTM standards mentioned in this Section and included in the UL and NEMA Standards applicable to raceways, boxes, and fittings.

1.4 ENVIRONMENTAL CONDITIONS

A. Provide raceways, boxes, and fittings fabricated from materials resistant to corrosion and suitable for the application in the locations where installed, in conformance with NEC requirements for installation in “damp” and “wet”, areas.

1.5 SUBMITTALS

A. Product Data: For raceways, boxes, fittings, hangers, supports and accessories.

PART 2 - PRODUCTS

2.1 CONDUIT, BOX, AND FITTING MANUFACTURERS

A. Provide products by the following manufacturers:

1. Adalet / A Scott Fetzer Company
2. AFC Cable Systems, Inc.
3. Alflex Inc.
4. Allied Tube & Conduit Corporation
5. Allied Tube and Conduit Div. / A TYCO International Ltd. Company
6. Anamet Electrical, Inc.; Anaconda Metal Hose.
7. Appleton
8. Bell
9. Cooper / B-Line
10. Cooper Crouse-Hinds; Div. of Cooper Industries, Inc.
11. Electri-Flex Co.
12. Emerson/General Signal; Appleton Electric Company.
13. Erickson Electrical Equipment Co.
14. Hoffman.
15. Hubbell, Inc. / RACO
16. Hubbell, Inc./ Killark Electric Manufacturing Co.
17. Lew Electric Fittings Co.
18. LTV Steel Tubular Products Company
19. Myers
20. O-Z Gedney
21. Pittsburgh Standard Conduit Co.,
22. RACO; Division of Hubbell, Inc.
23. Scott Fetzer Co.; Adalet-PLM Division.
24. Spring City Electrical Manufacturing Co.
25. Thomas & Betts Corporation.
26. Triangle PWC Co.
27. Wheatland Tube Co.
28. Or approved equal.

2.2 ELECTRICAL METALLIC TUBING (EMT)

A. Electrical Metallic Tubing (EMT): hot-dip galvanized steel tubing to ANSI C80.3 with fittings be for use in accordance with NEC Article 358 "Electrical Metallic Tubing: Type EMT", NRTL-listed and labeled under UL 797.

B. Provide locknuts, bushings, fittings, conduit bodies, junction boxes, pull boxes, and outlet boxes as follows:

1. Locknuts: galvanized steel
2. Bushings: thermoplastic
3. Fittings;

a. Two (2") inches in size and smaller, shall be steel compression type fittings.
b. 2-1/2 inch size and larger must employ steel compression gland fittings.
c. Indent type fittings shall not be used.

4. Conduit bodies: cast metal.
5. Junction and outlet boxes: stamped steel.
6. Pull boxes: painted sheet metal with hinged screw cover

2.3 RIGID METAL CONDUIT (RMC)

A. Rigid Galvanized Steel Conduit (RGS): hot dip galvanized exterior and interior to ANSI C80.1, threads hot dip galvanized after fabrication, for use in accordance with NEC Article “Rigid Metal Conduit: Type RMC”, NRTL-listed and labeled under UL 6. Threads shall be hot dip galvanized after fabrication.

B. Provide RMC locknuts, bushings, fittings, conduit bodies, junction boxes, pull boxes, and outlet boxes as follows:

1. Locknuts: galvanized steel.
2. Bushings: galvanized steel or malleable iron, insulated-throat grounding type, with thermoset plastic insulation insert, complete with mechanical ground lug for connection to ground wire.
3. Fittings: ANSI 80.4, hot-dip galvanized cast steel or malleable iron. Conduit hubs or similar approved fittings shall be provided for conduit entry to water and dust-resistant enclosures.
4. Conduit bodies: galvanized cast steel or malleable iron Form 8 with oil-resistant gasket and galvanized cast steel or malleable iron cover.
5. Junction boxes: galvanized cast steel or malleable iron with oil-resistant gasket and galvanized cast steel or malleable iron cover.
6. Pull boxes: painted or stainless steel fabricated sheet metal type with hinged screw cover.
7. Outlet boxes: Type FS or FD for exposed locations.
8. Conduit sealoffs: : Cast metal, combination horizontal and vertical type, oversized for 40% wire fill to match allowable wire fill in conduit, with breather and drain.

2.4 LIQUIDTIGHT FLEXIBLE METAL CONDUIT (LFMC)

A. Liquidtight flexible metal conduit (LFMC): Flexible steel type UA conduit with PVC jacket, for use in accordance with NEC Article “Liquidtight Flexible Metal Conduit: Type LFMC”, NRTL-listed and labeled under UL 360. Non-UL listed LFMC is not acceptable.

B. Fittings: Insulated-throat screw-in connectors, NEMA FB 1, UL 514B, galvanized malleable iron or steel. Connectors shall be suitable for use as grounding fittings. Provide fittings with bonding jumper connections for exterior bonding jumpers at motors.

2.5 FLEXIBLE METAL CONDUIT (FMC)

A. Flexible metal conduit (FMC): Galvanized steel flexible steel conduit, for use in accordance with NEC Article "Flexible Metal Conduit: Type FMC", NRTL listed and labeled.

2.6 SINGLE CONDUIT HANGERS

A. Manufacturers:

1. Appleton
2. Crouse-Hinds
3. Erico International Corporation (Caddy)
4. Killark
5. Thomas and Betts (Kindorf, Steel City)
6. Unistrut
7. Or approved equal

B. Single RMC attachment to structural steel: galvanized malleable iron PC (parallel clamp), EC (edge clamp), and RC (right angle clamp) type conduit-to-structural-steel clamps, or galvanized steel clevis hangers on galvanized steel threaded rods attached to galvanized malleable iron beam clamps. Bolts shall be galvanized steel.

C. Single RMC attachment to concrete and masonry surfaces: galvanized malleable iron one-hole clamp and galvanized malleable iron clamp-back, or galvanized steel clevis hangers on galvanized steel threaded rods attached to galvanized steel rod hanger fitting bolted to concrete with expansion bolts. Bolts shall be galvanized steel.

D. Single EMT attachment to structural steel: galvanized malleable iron beam clamp with hardened set screw and threaded hole for galvanized steel single-bolt conduit hanger or threaded rod and clevis hanger. Bolts shall be plated steel.

E. Single EMT attachment to concrete and masonry surfaces: galvanized steel one-hole clamp and galvanized steel clamp-back, or plated steel single-bolt hangers on plated steel threaded rods attached to galvanized steel rod hanger fitting bolted to concrete with expansion bolts. Single piece combination one-hole clamp and clamp-back hangers are also acceptable. Bolts shall be plated steel.

2.7 MULTIPLE CONDUIT HANGERS (CHANNEL SUPPORTS)

A. Manufacturers:

1. Aickinstrut
2. Cooper B-Line
3. GS Metals Inc.
4. Thomas & Betts (Kindorf)
5. Unistrut
6. Or approved equal

B. Steel channel and associated hardware and fittings:

1. 1-1/2 x 1-1/2 inch nominal size, minimum. UL 5B listed and labeled. Thickness as required for the application, minimum 0.071 inches.
2. Deflection of individual support channels shall not exceed 1/180 of span when loaded with conduit plus 200 pounds.
3. Electro-galvanized: Electrolytically zinc coated conforming to ASTM B633 Type III SC1.
4. Bolts: Grade 3 or better electroplated.
5. Conduit straps: electro-galvanized.

2.8 CONDUIT SLEEVES AND SEALING FITTINGS

A. Manufacturers:

1. Appleton
2. Crouse-Hinds
3. Thunderline
4. Thomas & Betts
5. O.Z. Gedney
6. Or approved equal

B. Conduit-to-Sleeve Sealing Fittings:

1. Synthetic elastomeric gland with galvanized steel or stainless steel compression plates sized for the conduit OD and sleeve ID, or a manufactured assembly of hot-dip galvanized or stainless steel pressure plates, neoprene sealing grommets, and cast or malleable iron sealing bodies with zinc-rich epoxy coating, with factory-assembled galvanized steel, PVC, or polyethylene pipe sleeve. Segmented seals are also acceptable for conduit 4-inch trade size and larger.
2. Sealing fittings for wall penetrations with water or soil on one side shall have seals installed at both ends of the conduit sleeve or core-drilled hole.
3. Seals shall have fire ratings equal to the fire-resistant rating of the wall.

2.9 CONDUIT INTERIOR SEALING FITTINGS

A. Manufacturers:

1. Crouse-Hinds
2. O.Z. Gedney
3. Thomas & Betts

B. Conduit-to-Cable Sealing Fittings:

1. For exposed conduit ends without pull and junction boxes: Conduit fitting with synthetic elastomeric sealing gland with galvanized stainless steel compression plates drilled for the conduit ID and cable(s) OD, retained by threaded collar at the end of the conduit.
2. For exposed conduit ends entering pull or junction box: Conduit fitting suitable for installation of locknuts at conduit entry to sheet metal box, and bushing with synthetic elastomeric sealing gland with galvanized stainless steel compression plates drilled for the conduit ID and cable(s) OD, retained by threaded collar at the end of the conduit.
3. Seal shall be watertight at 20 feet of water pressure.

2.10 CONDUIT EXPANSION AND DEFLECTION FITTINGS

A. Manufacturers:

1. Crouse-Hinds
2. Spring City Electric
3. O.Z. Gedney
4. Thomas & Betts

B. Conduit expansion and deflection fittings:

1. Suitable for expansion joint elongation and deflection. Comply with UL 467 and UL 514B.
2. Materials of construction: Hot dip galvanized ductile iron body, neoprene sealing sleeve, stainless steel clamps, tinned flexible copper equipment bonding jumper.

2.11 BOXES, ENCLOSURES, AND CABINETS

A. Manufacturers:

1. Cooper Crouse-Hinds; Div. of Cooper Industries, Inc.
2. EGS/Appleton Electric.
3. Erickson Electrical Equipment Company.
4. Hoffman.
5. Hubbell Incorporated; Killark Electric Manufacturing Co. Division.
6. O-Z/Gedney; a unit of General Signal.
7. RACO; a Hubbell Company.
8. Scott Fetzer Co.; Adalet Division.
9. Spring City Electrical Manufacturing Company.
10. Thomas & Betts Corporation.
11. Walker Systems, Inc.; Wiremold Company (The).
12. Woodhead, Daniel Company; Woodhead Industries, Inc. Subsidiary.

B. Sheet Metal Outlet and Device Boxes: NEMA OS 1.

C. Cast-Metal Outlet and Device Boxes: NEMA FB 1, ferrous alloy, Type FD, with gasketed cover.

D. Nonmetallic Outlet and Device Boxes: NEMA OS 2.

E. Small Sheet Metal Pull and Junction Boxes: NEMA OS 1.

F. Cast-Metal Access, Pull, and Junction Boxes: NEMA FB 1, galvanized, cast iron with gasketed cover.

G. Hinged-Cover Enclosures: with continuous-hinge cover with flush latch, steel, finished inside and out with manufacturer's standard enamel.

H. Cabinets:

1. Galvanized-steel box with removable interior panel and removable front, finished inside and out with manufacturer's standard enamel.
2. Hinged door in front cover with flush latch and concealed hinge.
3. Key latch to match panelboards.
4. Metal barriers to separate wiring of different systems and voltage.
5. Accessory feet where required for freestanding equipment.

2.12 FACTORY FINISHES

A. Finish: For painted steel enclosures, provide manufacturer's standard commercial and industrial coating in ANSI 49 or 61 light gray color, unless otherwise required by the NEC.

B. Field painting shall be required for uncoated cast iron, steel, galvanized, zinc-coated, and factory primed surfaces. Products shall be degreased and made suitable for field painting prior to packaging for shipment.

PART 3 - EXECUTION

3.1 RACEWAY APPLICATIONS

A. Underground: Concrete encased RGS:

B. Exterior above ground: RGS.

C. All other interior locations: EMT.

D. Connections to motor-driven equipment, vibrating equipment and equipment requiring position adjustment in exterior locations: LFMC.

E. Connections to motor-driven equipment, transformers, vibrating equipment, equipment requiring position adjustment and lighting fixtures in all other interior locations: FMC.

F. Connections to motor-driven equipment, transformers, vibrating equipment, equipment requiring position adjustment and lighting fixtures in process areas and electric rooms: LFMC.

a. For 90-degree bends use PVC-coated rigid galvanized steel long radius factory-fabricated elbows.
b. For final 10 feet of conduit at duct bank entries into buildings use RGS.

3.2 INSTALLATION – GENERAL

A. Deliver raceways, boxes, and fittings to job site in factory packaging. Store in clean, dry, weatherproof locations. Handle in accordance with manufacturer’s recommendations.

B. Install raceways, boxes, and fittings in accordance with manufacturer's installation instructions and NEC requirements as a minimum, and comply with the additional requirements described in this Section.

C. Conduits shall be electrically and mechanically continuous, and suitable for use as an equipment-grounding conductor. Make up threaded joints wrench tight.

D. Fasten boxes in outdoor and corrosive locations using external mounting feet. Do not drill through boxes.

E. Minimum Raceway Size: 3/4-inch trade size except that ½ inch trade size may be used for lighting whips above suspended ceilings.

F. Comply with NEC requirements for sizing outlet and junction boxes to accommodate wires, splices, and devices.

G. Bends and offsets between pull points shall not exceed a cumulative total of 270 degrees unless otherwise approved by the Engineer. Maximum distance between pull points in conduit systems inside buildings shall be 100 feet unless otherwise approved by the Engineer.

H. Raceways shall be routed in conformance with the following guidelines:

1. Install conduits exposed, concealed, and underground as indicated on the Drawings and as specified herein. Interior raceways shall be installed above grade/finished floor unless otherwise shown or noted.
2. Do not obstruct access to equipment for operation and maintenance. Coordinate conduit routings with the work of other trades. Plan conduit routings to avoid lighting fixtures, and leave space for easy access to HVAC equipment, motors, and duct access hatches and doors.
3. Route conduits around doors, windows, hatches, louvers, and other building openings.
4. Group conduits on horizontal trapeze hangers or on wall-mounted steel channel where long horizontal runs are required.
5. Maintain eight feet minimum clearance above finished floor wherever it is physically possible to do so. Comply with OSHA requirements for minimum headroom.
6. Where conduits enter the top of electrical equipment enclosures and control panels, install conduit interior sealing fittings to prevent entry of water and condensation from conduit.

I. Cut conduits square with roller-wheel pipe cutter. Hacksaw cuts are acceptable only if the entire conduit is swabbed clean after cutting and threading is completed. Conduits cut in the field shall be threaded with sharp, standard NPT dies to achieve a fully cut tapered thread with a minimum of five full tapered threads at the end of the conduit. Running threads are not acceptable. Over- and under-threading are not acceptable. After threading, ream conduit ends, remove cuttings and debris from inside and outside of conduit, degrease, and apply cold spray-on zinc-rich paint.

J. Conduit bends shall be made with conduit bending tools manufactured for the purpose. Comply with conduit and bending tool manufacturers' instructions.

K. Do not cut or drill holes in structural beams and columns, or other structural members. Do not weld raceway supports to structural steel.

L. Join raceways with fittings designed and approved for that purpose and make joints wrench tight.

M. Provide expansion, deflection, or expansion & deflection couplings at building expansion joints.

N. Three-piece (Erickson) couplings shall be used where it is not possible to turn conduits to make up threaded joints. Application for permission to use threadless fittings at specific locations shall be made in writing to the Engineer, and threadless fittings shall not be used unless approved.

O. Complete raceway installation before starting conductor installation.

P. When core drilling holes, use non-destructive testing method to locate reinforcing steel and core drill to avoid reinforcing.

Q. Apply firestopping to raceway penetrations of fire-rated floor and wall assemblies to achieve fire-resistance rating of the assembly. Firestopping materials and installation requirements are specified in the Section "Electrical-General".

R. Make bends and offsets such that ID is not reduced. Keep legs of bends in the same plane and keep straight legs of offsets parallel.

S. Terminations:

1. Where raceways are terminated with locknuts and bushings, align raceways to enter squarely and install locknuts with dished surface against box. Use two locknuts, one inside and one outside box. Install bushings wrench-tight.
2. Where raceways are terminated with threaded hubs, screw raceways or fittings tightly into hub such that end bears against wire protection shoulder. Where chase nipples are used, align raceways so coupling is square to box; tighten chase nipple so no threads are exposed.
3. Install temporary closures to prevent foreign matter from entering raceways.

T. Provide pull wires in spare raceways. Use polypropylene or monofilament plastic line with not less than 200-lb tensile strength. Leave at least 12 inches of slack at each end of pull wire.

U. Where conduits pass from outdoor or underground locations to interior locations, seal conduit opening at first interior enclosure. Use duct seal or other acceptable non-hardening compound.

V. Flexible Connections:

1. Recessed and semi-recessed lighting fixtures: maximum of 72 inches of flexible conduit with UL-listed grounding fittings.
2. Transformers, motor-driven equipment and equipment subject to vibration or movement: maximum 36 inches of LFMC up to 2 inch trade size, up to 72 inches in larger sizes.
3. Install separate equipment bonding jumper across flexible connections where required by the NEC.

3.3 INSTALLATION – EXPOSED RACEWAYS, BOXES AND FITTINGS

A. Raceways, boxes, and fittings may be installed exposed in process areas and electric rooms.

B. Install exposed raceways parallel or at right angles to nearby surfaces or structural members.

1. Run raceways together in-groups on common supports wherever possible.
2. Do not use mechanical piping or ceiling supports to support conduit runs.

C. Make concentric bends in parallel exposed conduit runs. Use factory elbows only where elbows can be installed parallel; otherwise, provide field bends for parallel raceways.

D. Surface-mounted channel supports shall be bolted to walls with expansion anchors.

E. Trapeze channel supports shall be suspended from minimum 3/8 inch threaded rod. Fasten rods to structural steel with beam clamps or channel assemblies designed specifically for each application. Fasten threaded rods to concrete with expansion bolts and threaded rod hanger, or concrete channel inserts

F. Keep raceways at least 6 inches away from parallel runs of flues and mechanical piping (including insulation). Install horizontal raceway runs above water piping.

G. Install electrical enclosures and cabinets plumb. Support at each corner.

3.4 INSTALLATION – CONCEALED RACEWAYS, BOXES AND FITTINGS

A. Install raceways, boxes, and fittings concealed, including above suspended ceilings and, in partitions, in areas with a finished ceiling as indicated on the Drawings unless otherwise noted.

B. Install concealed raceways with a minimum of bends in the shortest practical distance, considering type of building construction and obstructions, unless otherwise indicated.

C. Raceways shall not be installed on the exterior of buildings unless otherwise shown.

3.5 INSTALLATION – UNDERGROUND CONDUIT

A. Install raceways underground as indicated on the Drawings.

3.6 PROTECTION DURING CONSTRUCTION

A. Provide protection and maintain conditions that prevent damage or deterioration to coatings and finishes until time of Substantial Completion.

1. Repair damage to galvanize finishes with zinc-rich paint recommended by manufacturer.
2. Repair damage to paint finishes with matching touchup coating recommended by manufacturer.

3.7 CLEANING & PAINTING

A. Swab conduits clean after installation and plug ends until conductors are installed.

B. Remove dust, construction debris, plaster and paint spatters from raceways, boxes, and fittings after all trades have completed their work.

C. After completing installation of exposed, factory-finished raceways and boxes, inspect exposed finishes, touch up damage, and prepare for finish painting in accordance with Division 9 Section “Field Painting”.

3.8 IDENTIFICATION

A. Identify raceways, boxes, and fittings as described in Division 26 Section “Electrical Identification”.

END OF SECTION

SECTION 26 05 48

ELECTRICAL IDENTIFICATION

PART 1 - GENERAL

1.1 SUMMARY

A. This Section includes product and installation requirements for identification of electrical equipment, raceways, conductors, circuits, and outlets, and warning signs.

1.2 CODES AND STANDARDS

A. Materials and installation shall be in accordance with the latest revisions of the following codes, standards and specifications, except where more stringent requirements have been specified herein:

1. National Electrical Safety Code (NESC)
2. Nationally Recognized Testing Laboratory (NRTL)
3. NFPA 70E Standard for Electrical Safety in the Workplace®
4. NFPA 79 Electrical Standard for Industrial Machinery
5. Occupational Safety and Health Act (OSHA)

1.3 SUBMITTALS

A. Make submittals in accordance with the General Provisions.

B. Submittals shall include the following:

1. Product data
2. Complete list of all engraved nameplates titles.
3. Sample of each of the following (when requested):
   a. engraved equipment nameplate
   b. computer-generated label
   c. wiremarkers
   d. safety signs
   e. laminated instrument tags

PART 2 - PRODUCTS

2.1 EQUIPMENT NAMEPLATES

A. Provide custom nameplates for all equipment listed in Part 3 of this Section.

B. Nameplates shall have white letters engraved on black field, and shall be fabricated from 3-layer (black-white-black) thermoset plastic.

C. Drill holes in nameplates to be fastened with tie-wraps as described in Part 3 of this Section.

D. Nameplate lettering to be uppercase Roman block letters, minimum height as follows:

1. MCCs, panelboards, and transformers: 1/2 inch.
2. Control Panels (unless factory-labeled): 1/2 inch.
3. Other equipment: 1/4-inch minimum.

2.2 PUNCHED TAPE LABELS (RECEPTACLE IDENTIFICATION)

A. Punched Tape Labels for identification of receptacle circuits shall be 1/2 -inch black tape with white raised lettering.

B. Manufacturer: Dymo or approved equal

2.3 WIREMARKERS

A. Wiremarkers shall be computer-printed on white wrap-around paper with clear plastic protective "tail" and pressure-sensitive adhesive.

B. Manufacturer: Brady, T&B, Panduit, or approved equal.

2.4 WIRE COLOR CODING

A. Comply with NEC requirements for applying color-coding.

B. Color Coding for service, feeder, and branch circuit wiring shall be as follows:

1.	208 / 120 VOLTS	A-B-C-N-G	Black - Red - Blue - White - Green
2.	480 / 277 VOLTS	A-B-C-N-G	Brown - Orange - Yellow - Gray - Green

C. Color coding for 120 VAC control wiring shall be as follows:

1. Line - Black
2. Neutral - White
3. Ground - Green
4. Switched - any color except black, white, and green.

D. Color coding for twisted shielded pair and twisted shielded triple signal cable conductors shall be the manufacturer's standard insulation colors.

E. Color coding for DC power and control circuit wires:

1. Negative polarity - Black
2. Positive polarity - Red
3. Switched - any color except black, red, white, and green.

2.5 CONDUIT IDENTIFICATION

A. Identify exposed unpainted conduits with a black indelible felt-tip marker.

B. Identify exposed painted conduits with laminated tags fastened with nylon ties.

2.6 WARNING SIGNS

A. Provide warning signs on electrical equipment, electrical room doors, and automatically started electrical equipment in accordance with NEC and OSHA requirements.

B. Electrical Room warning signs shall have the legend "Danger - High Voltage - Authorized Personnel Only".

C. Automatically started motor-driven equipment shall have warning signs with the legend: "Warning - This Equipment Starts and Stops Automatically".

PART 3 - INSTALLATION

3.1 NAMEPLATES

A. Fabricate equipment nameplates using the description shown on the Drawings.

B. Provide equipment nameplates for motor control centers, control panels, panelboards, variable frequency controllers, manual motor starting switches, transformers, disconnect switches, automatic transfer switch and major fire alarm system components.

C. Fasten nameplates to clean flat metal surfaces with pressure-sensitive two-sided adhesive tape.

3.2 RECEPTACLES

A. Label all receptacle circuits on device faceplates with punched (Dymo) tape.

B. Provide the following information after load balancing is complete:

1. Panel Designations (as shown on the Panelboard Schedules)
2. Branch Circuit Breaker Number

3.3 WIRE COLOR CODING AND MARKING

A. Color code each phase, neutral, and ground wire for service conductors, feeders, and branch circuits, at points of origin and termination of wires. Wire color shall remain the same for its entire length.

B. Provide wiremarkers on all control and signal wires, as shown on the approved loop diagrams, motor control wiring diagrams, and control panel field wiring diagrams.

3.4 CONDUIT IDENTIFICATION

A. Clean unpainted conduit surfaces with mineral spirits. Write conduit or circuit number shown on the Conduit Schedules or Panel Schedules on each conduit at each exposed conduit termination point.

B. Attached conduit identification labels to painted conduits with nylon tie-wraps.

3.5 WARNING SIGNS

A. Fasten Electrical Room warning signs to doors with self-tapping tamper-resistant stainless screws.

B. Install warning signs required by OSHA in accordance with OSHA recommendations.

3.6 PANELBOARD DIRECTORIES

A. During construction, provide handwritten panelboard schedules. After load balancing has been completed, provide complete typewritten directory with protective clear plastic cover for each panelboard, with name of load as shown on the Panel Schedules on the Drawings for each individual branch circuit.

B. Lighting, receptacle, and appliance branch circuits shall be identified with room names in the panel directory.

END OF SECTION

SECTION 26 09 15

ELECTRICAL CONTROL COMPONENTS

PART 1 - GENERAL

1.1 SUMMARY

A. Provide electrical control components as shown on the Drawings and specified herein.

1.2 REFERENCES

A. Equipment and installation shall be in conformance with the latest revisions of the following codes and standards :

1. NFPA 70 – The National Electrical Code (NEC)
2. NFPA 79-2002 Electrical Standard for Industrial Machinery
3. National Electrical Manufacturers Association - NEMA
4. Underwriters Laboratories, Inc. - UL

1.3 SUBMITTALS

A. Submit manufacturer's catalog data for each electrical control component, clearly marked to show what is proposed for this project. Cross out inapplicable data. Include manufacturers catalog data with the Shop Drawings for the equipment making reference to this Section.

PART 2 - PRODUCTS

2.1 POWER SUPPLY DISCONNECTS

A. 3-phase power supply disconnects shall be circuit breaker type (unless otherwise shown), fully rated for the available fault current, with padlockable exterior operating handle.

B. Single phase 120 volt power supply disconnecting means shall be a two-position OFF – ON selector switch.

2.2 CONTROL POWER TRANSFORMERS

A. Control power transformers have 120 volts AC grounded single phase secondary for control circuits. Provide two primary fuses rated 100,000 amperes interrupting capacity at 600 volts, and one secondary fuse rated 300 volts.

2.3 CONTROL RELAYS

A. Control relays shall be encapsulated, general purpose plug-in type. Provide restraining straps and relay bases recommended by the relay manufacturer. Coils shall operate at 120 VAC unless otherwise shown.

B. Control relays shall be provided with integral check push-button for testing operation of the relay contacts.

C. Control relays shall be provided with an integral indicating light showing the position of the relay (de-energized or energized).

D. Contact quantities and types shall be as shown on the Drawings and shall have silver cadmium oxide construction with the following NEMA Standard ICS5 A300 contact ratings:

1. 10 amps continuous, 1/3 HP at 120 VAC
2. 10 amps continuous, 1/2 HP at 240 VAC
3. 10 amps continuous at 24 VDC

E. Provide multiple relays with parallel coil connections where necessary to obtain the required contact quantities.

F. Solid State Timing Relays (TR) shall have adjustable time settings within adjustable time ranges.

1. Time delay range shall be field-adjustable from 0.6 to 60 seconds unless otherwise indicated on the Drawings.

G. Control relays shall be as manufactured by:

1. Square D
2. Idec
3. Potter & Brumfield
4. Equal

2.4 PUSHBUTTONS, SELECTOR SWITCHES, INDICATING LIGHTS

A. General

1. Devices shall be heavy duty, watertight and oiltight, with die cast operator bodies of nominal 1-1/4 inch (30.5 mm) diameter , and molded modular type contact for blocks.
2. Devices in interior locations shall be rated NEMA 4 and NEMA 13. Devices in exterior locations shall be non-metallic type rated NEMA 4X.
3. Pushbuttons, selector switches, and indicating lights shall be suitable for operation on 120 volts 60 Hz.

B. Pushbuttons

1. Pushbuttons shall have button operator with color inserts and guards, engraved legend plates, and contact blocks as required for the specified functionality.
2. Emergency Stops shall be a pushbutton held in the depressed position by a glass disc. A chain attached hammer shall be provided to break the glass disc and allow the pushbutton to extend to open a normally closed contact. Five spare glass discs shall be provided.
3. Start pushbuttons shall be fully guarded, with green color insert, and momentary contacts.
4. Stop pushbuttons shall be unguarded (button extends above ring), with red color insert, and momentary contacts.

C. Selector Switches

1. Selector switches shall have gloved hand type operators, engraved legend plates, and contact blocks as required for the specified functionality.

D. Indicating Lights

1. Indicating lights shall be LED type unless otherwise indicated.
2. Indicating lights shall be provided with color caps matching the LED color.
3. Indicating lights shall be provided with engraved legend plates indicating function.

E. Manufacturers

1. General Electric
2. Square D
3. Allen Bradley
4. Equal.

2.5 CONTROL STATIONS

A. Control Stations shall have enclosure ratings and types in conformance with Division 26 Section "Electrical - General", with pre-punched openings for pushbuttons, indicating lights, and selector switches.

2.6 TERMINAL BLOCKS

A. Provide terminal blocks for all field wiring connections. Terminal blocks shall be rail-mounted, 600 volt, 30 amp, nylon, with recessed tubular screw terminals suitable for #12 through #18 AWG stranded copper wire terminations, "fingersafe" to DIN57470.

B. Terminal blocks shall be Square D "GM" series, or approved equal.

2.7 CARBON MONOXIDE MONITORING EQUIPMENT

A. Equipment for each system shall consist of two carbon monoxide sensor/transmitters, power supply/receiver module and testing materials.

B. The equipment shall measure and display carbon monoxide gas levels. Equipment shall also provide visual alarm indication and initiate ventilation equipment operation when preset limits are exceeded. Equipment shall have a measurement range of 0-100 ppm.

C. Sensor/transmitter shall have the following features:

1. Electrochemical, self checking, gas diffusion type.
2. Loop powered with 4-20 mA output
3. Plug-in connection allowing replacement without opening sensor/transmitter enclosure.
4. LED indicator.
5. Non-intrusive type operator interfaces.
6. Surface mounted enclosure.
7. One spare sensor shall be provided.

D. Power supply shall be provided with sufficient capacity to operate the sensor/transmitter. Input power shall be 120 VAC.

E. Receiver shall be compatible with the sensor/transmitter. The receiver shall accept the sensor/transmitter 4-20 mA signal and provide display of the measured gas level, provide LED indication of an alarm and provide three voltage free alarm contact outputs.

F. Power supply and receivers (one receiver for each sensor/transmitter) shall be housed in a single surface mounted enclosure.

G. Testing materials shall include a calibration kit with all necessary accessories complete with carrying case. Calibration gas shall be provided in sufficient quantity to allow for monthly calibrations for a duration of two years after substantial completion.

H. Carbon monoxide monitoring equipment shall be Model A12 sensor/transmitter, Model B14 power supply/receiver module as manufactured by Analytical Technologies, Inc. or equal.

2.8 MANUAL MO TOR STARTING SWITCHES

A. Manual motor starting switches shall be NEMA ISC 2, Class A, one pole, single speed, non-reversing with toggle handle and overload relay. Enclosures shall be surface mounted with NEMA rating as specified in the Division 26 Section “Electrical – General”.

B. Manufacturers

1. Eaton Corporation; Cutler-Hammer Products
2. General Electrical Company; GE Industrial Systems
3. Rockwell Automation; Allen-Bradley Co.; Industrial Control Group
4. Siemens/Furnas Controls
5. Square D

PART 3 - EXECUTION

3.1 INSTALLATION

A. Install control devices in conformance with the manufacturer's installation instructions and recommendations, and as shown on the Drawings.

B. Select manual motor starting switches to suit motor horsepower, full load current and overload requirements

3.2 ACCEPTANCE TESTS

A. Acceptance testing shall be performed as specified in the individual Specification Sections utilizing the control components.

END OF SECTION

SECTION 26 22 13

DRY TYPE TRANSFORMERS (600V AND LESS)

PART 1 - GENERAL

1.1 SUMMARY

A. Provide energy-efficient dry type transformers (600V and less) as shown on the Drawings and specified herein.

1.2 SUMMARY

A. This Section describes requirements for dry type distribution and power transformers with primary and secondary windings under 600V.

1.3 DEFINITIONS

A. In addition to the definitions in Division 26 Section “Electrical - General”, the following definitions apply to this Section:

1. AA: air-to-air (dry type, ventilated, self-cooled)
2. AC: alternating current
3. Energy efficient transformer: transformer kVA rating is at lower than maximum temperature rise for a particular insulation class
4. FA: forced-air (cooled)
5. FFA: future forced air (cooled)
6. FCAN: full capacity above normal
7. FCBN: full capacity below normal
8. MOV: metal oxide varistor
9. Standard transformer: transformer kVA rating is at maximum temperature rise for a particular insulation class

1.4 QUALIFICATIONS

A. The manufacturer of the core and coil shall procure all other transformer components, and shall assemble, factory test, and prepare the transformer for shipping.

B. The transformer manufacturer shall have quality certification to ISO 9000:2000 or equivalent.

1.5 REFERENCE STANDARDS

A. Comply with the following standards in effect at the time of bid submittal:

1. IEEE C2 National Electrical Safety Code.
2. IEEE 259-1999 IEEE Standard Test Procedure for Evaluation of Systems of Insulation for Dry-Type Specialty and General Purpose Transformers
3. IEEE C57 Family of Guides and Standards for Distribution, Power, and Regulating Transformers, with emphasis on the following:

a. IEEE C57.12.01-1998 IEEE Standard General Requirements for Dry-Type Distribution and Power Transformers Including Those with Solid Cast and/or Resin Encapsulated Windings
b. IEEE C57.12.55-1987 (R1998) American National Standard for Transformers--Dry-Type Transformers Used in Unit Installations, Including Unit Substations--Conformance Standard
c. IEEE C57.12.70 IEEE Standard Terminal Markings and Connections for Distribution and Power Transformers
d. IEEE C57.12.80 IEEE Standard Terminology for Power and Distribution Transformers
e. IEEE C57.12.91 IEEE Standard Test Code for Dry-Type Distribution and Power Transformers
f. IEEE C57.96-1999 IEEE Guide for Loading Dry-Type Distribution and Power Transformers
g. IEEE C57.105-1978 (R1999) IEEE Guide for Application of Transformer Connections in Three-Phase Distribution Systems
h. IEEE C57.110-1998 IEEE Recommended Practice for Establishing Transformer Capability When Supplying Nonsinusoidal Load Currents

4. NEMA Standard ST-20
5. NEMA Standard TP-1 for Energy-Efficient Transformers
6. NEMA Standard TP-2 for Test Requirements For Energy Efficient Transformers
7. NFPA 70 National Electrical Code
8. UL Standard 1561
9. Other applicable NRTL Standards

1.6 ENVIRONMENTAL CONDITIONS

A. Environmental conditions:
1. Temperature range, humidity range, and elevation are specified in Division 26 Section “Electrical - General”.

1.7 SUBMITTALS

A. Preconstruction Submittals
1. Qualifications data for Testing Firm and Testing Firm’s Field Supervisor.
2. Qualification data for Manufacturer, including Quality Certification.

B. Shop Drawings
1. Compliance Statement
2. Specially prepared shop drawings including the following:
a. Equipment nameplate data and electrical ratings
b. Weights and overall dimensions
c. General arrangement, section view, and sub-assembly drawings cross-indexed to a complete bill of materials listing all components and part numbers
d. Connection diagrams and details.
e. Location of field wiring & conduit connections
3. Include Product Data Sheets with Shop drawing submittals.

C. Plans, elevations, sections, and details showing installation dimensions, required clearances for access, operation and maintenance, installation details, and special instructions.

D. Product Data Sheets

1. Technical data sheets, marked to show equipment selected for this project.

E. Test Reports

1. Factory test reports
2. Acceptance test reports

F. Manufacturer's Instructions

1. Shipping, receiving, handling, rigging, storage and setting instructions, recommendations, cautions, and warnings. Foundation details showing concrete and anchor bolt details.

G. Manufacturer's Field Reports

1. Inspection of equipment installation (prior to energization and startup) report
2. Equipment startup and functional testing report

H. Operation and Maintenance Data

1. Operation and Maintenance Instructions: For equipment and accessories, including pre-energization tests and checks, initial energization procedure, exploded views of major assemblies and sub-assemblies indexed to parts lists, maintenance instructions and recommended maintenance intervals, troubleshooting procedures, and contact details for spare parts purchase and technical support.

I. Additional requirements are specified in Division 26 Section "Electrical - General".

1.8 QUALITY ASSURANCE

A. Quality Certification: The transformer manufacturer shall have quality certification to ISO 9000:2000 or an equivalent Quality Management System acceptable to the Engineer. Evidence of certification shall be submitted with equipment shop drawings.

B. Comply with NFPA 70 National Electrical Code requirements, and Reference Standards listed herein.

1.9 COORDINATION

A. Coordinate layout and installation of transformers with the work of other trades, including mechanical equipment and piping, ceilings (where applicable), and adjacent surfaces. Maintain required clearances for workspace and equipment access doors and panels.

B. Coordinate size and location of concrete equipment pads with the work of other trades. Follow the switchgear manufacturer's installation instructions. Set inserts into concrete formwork prior to placement of concrete, and check that inserts remain in place during

placement of concrete. Concrete, reinforcement, and formwork requirements are specified in Division 3.

PART 2 - PRODUCTS

2.1 MANUFACTURERS

A. Manufacturers: Subject to compliance with requirements, provide products by one of the following:

1. Eaton / Cutler-Hammer
2. General Electric
3. Square D / Groupe Schneider NA
4. Asea Brown Boveri, Ltd.
5. Siemens Energy & Automation, Inc.

2.2 DRY-TYPE DISTRIBUTION AND POWER TRANSFORMERS

A. Dry type distribution transformers shall have the following ratings:

1. Capacity (kVA) as shown on Drawings at 30 deg. C average, 40 deg. C max. ambient air temperature in accordance with IEEE C57.96-1999
2. 220 deg. C insulation system.
3. Insulation Temperature Rise: 115 deg C, maximum rise above 40 deg C., energy-efficient type.
4. Primary voltages as shown on Drawing, three phase delta 60 Hz primary
5. Secondary voltages as shown on Drawings, solidly grounded wye secondary
6. Four - 2.5% FCAN primary taps
7. Four - 2.5% FCBN primary taps
8. NEMA 2 enclosure

B. Dry-type two-winding transformers shall be in compliance with applicable portions of NEMA ST 20, IEEE C57.12.01, and UL 1562.

C. Primary and Secondary Connections: Air terminal compartment with removable door. Tin-plated copper bar with predrilled NEMA spade terminals.

D. Insulation Materials: IEEE C57.12.01, NEMA ST20, non-hygroscopic, thermosetting varnish.

E. Core and Coil Assemblies: Transformer coils shall be copper wound on a core of electrical grade steel with high magnetic permeability and insulated laminations. Core and coil assembly shall be mounted on a structural steel base, which shall be isolated from the rest of the structure by vibration pads.

F. Grounding: Provide equipment grounding terminal welded to the core support structural steel. Provide tin-plated braided copper grounding jumpers between the core and coil assembly and the enclosure ground. Provide tin-plated secondary neutral terminal with provisions for connecting a grounding electrode conductor directly to the neutral terminal, and a copper bonding jumper to the transformer equipment (enclosure) ground.

G. The maximum temperature of the top of the enclosure shall not exceed 50 deg. C rise above 40 deg. C ambient.

H. Enclosure shall be fabricated from heavy gauge steel, cleaned, degreased, primed and painted with electrostatic process polyester powder coat, ANSI 61 light gray.

2.3 IDENTIFICATION

A. Nameplates: Engraved, laminated-plastic or metal nameplate for each transformer, mounted with corrosion-resistant screws. Nameplates and label products are specified in Division 26 Section "Electrical Identification".

2.4 QUALITY ASSURANCE

A. Factory Tests: Perform design and routine tests according to standards specified for components. Conduct transformer tests according to NEMA ST-20 for standard transformers, and NEMA ST-20 and TP2 for energy-efficient transformers.

2.5 TOUCHUP PAINT

A. Furnish 0.5 pint (250 mL) of touchup paint.

PART 3 - EXECUTION

3.1 EXAMINATION

A. Examine roughing-in of conduits and grounding systems to verify the following:
   1. Wiring entries comply with layout requirements.
   2. Entries are within conduit-entry tolerances specified by manufacturer and wiring will not have to cross section barriers to reach load or line lugs.

B. Examine walls, floors, roofs, and concrete equipment pads for suitable mounting conditions where transformers will be installed.

C. Verify that equipment grounding conductors are in place. Maximum ground resistance shall be 5 ohms at transformer.

D. Proceed with installation only after unsatisfactory conditions have been corrected.

3.2 DELIVERY, STORAGE, AND HANDLING

A. Store transformers in clean dry indoor rooms with a temporary dehumidifier and electric heating to maintain the storeroom between 5 and 40 deg. C with humidity less than 90%. Comply with manufacturer's additional written instructions for storing and periodic inspection and testing. Transformers shall be megger-tested monthly during storage. Units that have absorbed excessive moisture due to poor humidity and temperature control shall be returned to the manufacturer for drying-out and re-establishing acceptable megger test values at no additional cost to the Owner.

3.3 INSTALLATION

A. Transformers 75 kVA and larger shall be floor-mounted on concrete equipment pads.

1. Construct concrete equipment pads not less than 2 inches larger in both directions than supported unit and 4 inches high indoors.
2. Use 3000-psi), 28-day compressive-strength concrete and reinforcement as specified in Division 3 Section "Cast-in-Place Concrete."

B. Use steel channel and ½ inch diameter (minimum) threaded rods for wall and ceiling support assemblies.

C. Place and secure anchorage devices. Use equipment manufacturer's setting drawings, templates, diagrams, instructions, and directions furnished with items to be embedded.

D. Maintain minimum clearances and workspace at equipment according to manufacturer's written instructions and the NEC.

3.4 IDENTIFICATION

A. Identify field-installed wiring and components and provide warning signs as specified in Division 26 Section "Electrical Identification".

3.5 CONNECTIONS

A. Ground equipment in conformance with the Drawings".

B. Connect wiring in conformance with Division 26 Section "Wire and Cable".

C. Tighten electrical connectors and terminals according to manufacturer's published torque-tightening values. If manufacturer's torque values are not indicated, use those specified in UL 486A and UL 486B.

3.6 CLEANING

A. On completion of installation, inspect interior and exterior of panelboards. Remove paint splatters and other spots. Vacuum dirt and debris; do not use compressed air to assist in cleaning. Repair exposed surfaces to match original finish.

3.7 FIELD QUALITY CONTROL

A. Perform the following field tests and inspections and prepare test reports:

1. After installing transformers but before primary is energized, verify that grounding system is tested at specified value or less.
2. Perform electrical test and visual and mechanical inspection described in the following NETA Acceptance Testing Specification Inspection and Test Procedures applicable to the equipment furnished for this project:
3. 7.2.1.1 "Transformers, Dry-Type, Air-Cooled, Low-Voltage, Small"
4. 7.2.1.2 "Transformers, Dry-Type, Air-Cooled, Large"

B. Certify compliance with test parameters.

C. Remove malfunctioning units, replace with new units, and retest as specified above.

D. Test Reports: Prepare written reports to record the following:
   1. Test procedures used.
   2. Test results that comply with requirements.
   3. Test results that do not comply with requirements and corrective actions taken to achieve compliance with requirements.

END OF SECTION

SECTION 26 24 16

PANELBOARDS

PART 1 - GENERAL

1.1 SUMMARY

A. Provide panelboards as shown on the Drawings and specified herein.

B. This Section includes the following:
1. Power distribution panelboards.
2. Lighting and receptacle branch-circuit panelboards.

1.2 DEFINITIONS

A. In addition to the definitions in Division 26 Section “Electrical – General”, the following definitions apply to this Section:
1. EMI: Electromagnetic interference
2. GFCI: Ground-fault circuit interrupter.
3. RFI: Radio-frequency interference.
4. RMS: Root mean square.
5. SPDT: Single pole, double throw.

1.3 SUBMITTALS

A. Product Data: For each type of panelboard, overcurrent protective device, transient voltage surge suppression device, accessory, and component indicated. Include dimensions and manufacturers' technical data on features, performance, electrical characteristics, ratings, and finishes.

B. Shop Drawings: For each panelboard and related equipment, submit the following:
1. Specially prepared drawing for each panelboard showing dimensions, busbars, circuit breakers, doors and trim, latches and locking devices, and complete bill of materials listing all components. Show tabulations of installed devices, equipment features, and ratings. Include the following:
   a. Enclosure types and details for types other than NEMA 250, Type 1.
   b. Bus configuration, current, and voltage ratings.
   c. Short-circuit current rating of panelboard and overcurrent protective devices
   d. UL listing for series rating of installed devices.
   e. Features, characteristics, ratings, and factory settings of individual overcurrent protective devices and auxiliary components.

2. Wiring Diagrams: Power (for all panelboards) and control wiring (for panelboards with control devices).

C. Field quality-control test reports including the following:
1. Test procedures used.

2. Test results that comply with requirements.
3. Results of failed tests and corrective action taken to achieve test results that comply with requirements.

D. Panelboard Schedules: For installation in panelboards.

E. Operation and Maintenance Data: For panelboards and components to include in emergency, operation, and maintenance manuals. Include the following:
1. Manufacturer's written instructions for testing and adjusting overcurrent protective devices.
2. Time-current curves, including selectable ranges for each type of adjustable overcurrent protective device.

1.4 QUALITY ASSURANCE

A. Source Limitations: Obtain panelboards, overcurrent protective devices, components, and accessories through one source from a single manufacturer.

B. Product Options: Drawings indicate size, profiles, and dimensional requirements of panelboards and are based on the specific system indicated.

C. Electrical Components, Devices, and Accessories: Listed and labeled as defined in NFPA 70, Article 100, by a testing agency acceptable to authorities having jurisdiction, and marked for intended use.

D. Comply with NEMA PB 1.

E. Comply with NFPA 70.

1.5 PROJECT CONDITIONS

A. Environmental Limitations: Rate equipment for continuous operation under the ambient temperature, altitude, and humidity conditions described in Division 26 Section "Electrical - General".

1.6 COORDINATION

A. Coordinate layout and installation of panelboards and components with other construction that penetrates walls or is supported by them, including electrical and other types of equipment, raceways, piping, and encumbrances to workspace clearance requirements.

1.7 EXTRA MATERIALS

A. Furnish extra materials described below that match products installed and that are packaged with protective covering for storage and identified with labels describing contents.
1. Keys: Two spares for each type of panelboard cabinet lock.

2. Key all panelboards alike.

PART 2 - PRODUCTS

2.1 MANUFACTURERS

A. Manufacturers: Subject to compliance with requirements, provide products by one of the following:
   1. Panelboards, Overcurrent Protective Devices, and Accessories:
      a. Eaton Corporation; Cutler-Hammer Products.
      b. General Electric Co.; Electrical Distribution & Protection Div.
      c. Siemens Energy & Automation, Inc.
      d. Square D.
      e. or equal.
   2. Transient Voltage Surge Suppressors:
      a. Advanced Protection Technologies.
      b. Current Technology.
      c. Liebert Corporation.
      d. United Power.
      e. or equal.

2.2 MANUFACTURED UNITS

A. Enclosures: Flush- and surface-mounted cabinets in conformance with NEMA PB 1.
   1. Rated for environmental conditions at installed locations, and in conformance with Division 26 Section “Electrical – General” enclosure requirements.
   2. Front: Secured to box with concealed trim clamps. For surface-mounted fronts, match box dimensions; for flush-mounted fronts, overlap box.
   3. Hinged Front Cover: Entire front trim hinged to box and with standard door within hinged trim cover. Provide full height piano hinge.
   4. Gutter Extension and Barrier: Same gauge and finish as panelboard enclosure; integral with enclosure body. Arrange to isolate individual panel sections..
   5. Finish: Manufacturer's standard enamel finish over corrosion-resistant treatment or primer coat.
   6. Directory Card: With transparent protective cover, mounted in metal frame, inside panelboard door.
   7. The manufacturer's nameplate shall be of corrosion resistant metal such as stainless steel and have the pertinent ratings embossed in raised letters and numerals. The pertinent ratings shall include at least the following; amperage, voltage, phase, wires, AIC, manufacturer and model number.

B. Phase and Neutral Buses: Tin-plated Hard-drawn copper, 98 percent conductivity.

C. Equipment Ground Bus: Hard-drawn copper, adequate connections for feeder and branch-circuit equipment ground conductors; bonded to box.

D. Extra-Capacity Neutral Bus: Neutral bus rated 200 percent of phase bus and UL listed as suitable for nonlinear loads.

E. Isolated Equipment Ground Bus: Adequate for branch-circuit equipment ground conductors; insulated from box, in addition to equipment ground bus.

F. Split Bus: Vertical buses divided into individual vertical sections.

G. Conductor Connectors: Suitable for use with conductor material.

1. Main and Neutral Lugs: Mechanical type.
2. Ground Lugs and Bus Configured Terminators: Mechanical type.
3. Feed-Through Lugs: Mechanical type suitable for use with conductor material. Locate at opposite end of bus from incoming lugs or main device.
4. Extra-Capacity Neutral Lugs: Rated 200 percent of phase lugs mounted on extra-capacity neutral bus.

H. Future Devices: Mounting brackets, bus connections, and necessary appurtenances required for future installation of devices.

2.3 PANELBOARD SHORT-CIRCUIT RATING

A. UL label indicating series-connected rating with integral or remote upstream overcurrent protective devices. Include size and type of upstream device allowable, branch devices allowable, and UL series-connected short-circuit rating.

B. Fully rated to interrupt symmetrical short-circuit current available at terminals.

2.4 POWER DISTRIBUTION PANELBOARDS

A. Doors: Secured with vault-type latch with tumbler lock; keyed alike.

B. Main Device: Main lugs (MLO) or main circuit breaker (MCB), as indicated on the drawings.

C. Branch Overcurrent Protective Devices:

1. For Circuit-Breaker Frame Sizes 125 A and Smaller: Bolt-on circuit breakers.
2. For Circuit-Breaker Frame Sizes Larger Than 125 A: Bolt-on circuit breakers.
3. Fused switches.

2.5 LIGHTING AND APPLIANCE BRANCH-CIRCUIT PANELBOARDS

A. Branch Overcurrent Protective Devices: Bolt-on circuit breakers, replaceable without disturbing adjacent units.

B. Doors: Concealed hinges; secured with flush latch with tumbler lock; keyed alike.

2.6 TRANSIENT VOLTAGE SURGE SUPPRESSORS (TVSS)

A. IEEE C62.41, integrally mounted, plug-in-style, solid-state, parallel-connected, sine-wave tracking suppression and filtering modules.

1. Minimum Single-Impulse Current Ratings:

a. Line to Neutral: 100,000.
b. Line to Ground: 100,000.
c. Neutral to Ground: 50,000.

2. Protection modes shall be as follows:
   a. Line to neutral.
   b. Line to ground.
   c. Neutral to ground.
3. EMI/RFI Noise Attenuation Using 50-ohm Insertion Loss Test: 55 dB at 100 kHz.
4. Maximum Category C Combination Wave Clamping Voltage: 600 V, line to neutral and line to ground on 120/208 V 1000 V, line to neutral and line to ground on 277/480 V systems.
5. Maximum UL 1449 Clamping Levels: 400 V, line to neutral and line to ground on 120/208 V 800 V, line to neutral and line to ground on 277/480 V systems.
6. Withstand Capabilities: 3000 Category C surges with less than 5 percent change in clamping voltage.
7. Accessories:
   a. Form-C contacts, one normally open and one normally closed, for remote monitoring of system operation. Contacts to reverse position on failure of any surge diversion module.
   b. Audible alarm activated on failure of any surge diversion module.
   c. Six-digit transient-counter set to total transient surges that deviate from the sine-wave envelope by more than 125 V.

2.7 OVERCURRENT PROTECTIVE DEVICES

A. Molded-Case Circuit Breaker: UL 489, with interrupting capacity to meet available fault currents.
   1. Thermal-Magnetic Circuit Breakers: Inverse time-current element for low-level overloads, and instantaneous magnetic trip element for short circuits.
   2. GFCI Circuit Breakers: Single- and two-pole configurations with 30-mA trip sensitivity.
   3. Lugs: Mechanical style, suitable for number, size, trip ratings, and conductor materials.
   4. Application Listing: Appropriate for application; Type SWD for switching fluorescent lighting loads; Type HACR for heating, air-conditioning, and refrigerating equipment.

2.8 ACCESSORY COMPONENTS AND FEATURES

A. Furnish accessory set including tools and miscellaneous items required for overcurrent protective device test, inspection, maintenance, and operation.

B. Furnish portable test set to test functions of solid-state (electronic) trip devices without removal from panelboard.

C. Fungus Proofing: Permanent fungicidal treatment for panelboard interior, including overcurrent protective devices and other components.

PART 3 - EXECUTION

3.1 INSTALLATION

A. Install panelboards and accessories according to NEMA PB 1.1.

B. Mount top of trim 74 inches (1880 mm) above finished floor, unless otherwise indicated.

C. Mount plumb and rigid without distortion of box. Mount recessed panelboards with fronts uniformly flush with wall finish.

D. Install overcurrent protective devices.

1. Set field-adjustable circuit-breaker trip ranges.

E. Install filler plates in unused spaces.

F. Stub four 1-inch (27-GRC) empty conduits from recessed panelboards into accessible ceiling space or space designated to be ceiling space in the future. Stub four 1-inch (27-GRC) empty conduits into raised floor space or below slab not on grade.

G. Arrange conductors in gutters into groups and bundle and wrap with wire ties.

3.2 IDENTIFICATION

A. Identify field-installed conductors, interconnecting wiring, and components; provide warning signs as specified in Division 26 Section "Electrical Identification."

B. Create a directory to indicate installed circuit loads. Indicate panelboard name, and the name of the upstream panelboard that feeds this panelboard with the words “Fed From Panel _____.” Obtain approval before installing. Use a computer or typewriter to create directory; handwritten directories are not acceptable. Provide a copy of each directory, 1 per page, as part of the Operation and Maintenance Manual.

C. Panelboard Nameplates: Label each panelboard with engraved metal or laminated-plastic nameplate mounted with corrosion-resistant screws.

3.3 CONNECTIONS

A. Ground equipment according to Division 26 Section "Grounding".

B. Connect wiring according to Division 26 Section "Wire and Cable."

3.4 CLEANING

A. On completion of installation, inspect interior and exterior of panelboards. Remove paint splatters and other spots. Vacuum dirt and debris; do not use compressed air to assist in cleaning. Repair exposed surfaces to match original finish.

3.5 FIELD QUALITY CONTROL

A. Prepare for acceptance tests as follows:

1. Test insulation resistance for each panelboard bus, component, connecting supply, feeder, and control circuit.
2. Test continuity of each circuit.

B. Perform the following field tests and inspections and prepare test reports:

1. Perform electrical test and visual and mechanical inspections described in the following NETA Acceptance Testing Specification Inspection and Test Procedures that are applicable to the products furnished for this project:
   a. 7.1 “Switchgear and Switchboard Assemblies”
   b. 7.6.1.1 “Circuit Breakers, Air, Insulated-Case, Molded-Case”
   c. 7.19.1 “Surge Arresters, Low-Voltage”
   d. 7.16.1.1 “Motor Control, Motor Starters, Low-Voltage”
2. Certify compliance with test parameters.
3. Correct malfunctioning units on-site, where possible, and retest to demonstrate compliance; otherwise, replace with new units and retest.

END OF SECTION

SECTION 26 24 19

MOTOR CONTROL CENTERS

PART 1 - GENERAL

1.1 SUMMARY

A. Provide motor control centers as shown on the Drawings and specified herein.

B. This Section includes motor control centers for use on ac circuits rated 600 V and less.

1.2 DEFINITIONS

A. In addition to the definitions in Division 26 Section “Electrical - General”, the following definitions apply to this Section:

1. DIP: dual-in-line pin or package
2. MCC: motor control center

1.3 QUALIFICATIONS

A. The motor control center structure, busbars, circuit breakers, and motor controllers shall be the products of a single manufacturer and shall be designed, tested, and manufactured in accordance with the standards referenced in this Specification.

B. The motor control center manufacturer shall have quality certification to ISO 9000:2000, or an equivalent quality management system acceptable to the Engineer.

1.4 REFERENCE STANDARD

A. Comply with the following standards in affect at the time of bid submittal:

1. ANSI/NEMA ICS 6 - Enclosures for Industrial Controls and Systems.
2. National Electrical Code
3. NEMA 250 Enclosures for Electrical Equipment
4. NEMA ICS 2 - General Standards for Industrial Control Systems
5. NEMA ICS 3 - Standards for Industrial Control Devices, Controllers and Assemblies
6. NEMA ICS 18 – Motor Control Centers
7. NEMA ST 20 - Dry Type Transformers for General Applications
8. NFPA 79 - Electrical Standard for Industrial Machinery
9. UL 508 - Industrial Control Equipment
10. UL 845 - Motor Control Centers

1.5 ENVIRONMENTAL CONDITIONS

A. Environmental Limitations: Rate equipment for continuous operation under the following conditions, unless otherwise indicated:

1. Temperature range, humidity range, and elevation as specified in Division 26 Section “Electrical - General”.

1.6 SUBMITTALS

A. Shop drawings: For each motor control center, submit specially prepared shop drawings including the following:
   1. Equipment nameplate data and electrical ratings
   2. Weights and overall dimensions
   3. General arrangement, section view, and sub-assembly drawings cross-indexed to a complete bill of materials listing all components and part numbers
   4. Three-line power schematic diagrams with control, protection and metering connection diagrams, and details.
   5. Plans, elevations, sections, and details showing installation dimensions, required clearances for access, operation and maintenance, installation details, and special instructions.
   6. Include product data sheets with the shop drawings.

B. Product data sheets: showing manufacturer’s standard products, and marked to show equipment selected for this project.

C. Manufacturer’s Installation Instructions: including manufacturer’s shipping, receiving, handling, rigging, storage and setting instructions, recommendations, cautions, and warnings. Foundation details showing leveling channel, concrete, and anchor bolt details.

D. Factory test reports.

E. Acceptance test reports.

F. Operation and Maintenance Data: For motor control centers, all installed devices, and components to include in emergency, operation, and maintenance manuals. Include the following:
   1. Routine maintenance requirements for motor control centers and all installed components.

   2. Manufacturer's written instructions for testing and adjusting overcurrent protective devices.

G. Load-Current and Overload-Relay Heater List: Compile after motors have been installed and arrange to demonstrate that selection of heaters suits actual motor nameplate full-load currents.

1.7 QUALITY ASSURANCE

A. Quality Certification: The switchgear manufacturer shall have quality certification to ISO 9000:2000 or an equivalent Quality Management System acceptable to the Engineer. Evidence of certification shall be submitted with equipment shop drawings.

B. Manufacturer's repair service. Maintain, within 100 miles (160 km) of Project site, a service center capable of providing training, parts, and emergency maintenance and repairs.

C. Source Limitations: Obtain motor control centers and controllers of a single type through one source from a single manufacturer.

D. Electrical Components, Devices, and Accessories: Listed and labeled as defined in NFPA 70, Article 100, by a testing firm acceptable to authorities having jurisdiction, and marked for intended use.

E. Comply with NFPA 70.

1.8 COORDINATION

A. Coordinate layout and installation of motor control centers with other construction including conduit, piping, equipment, and adjacent surfaces. Maintain required workspace clearances and required clearances for equipment access doors and panels.

B. Coordinate size and location of concrete bases. Cast anchor-bolt inserts into bases. Concrete, reinforcement, and formwork requirements are specified in Division 3.

C. Coordinate features of motor control centers, installed units, and accessory devices with pilot devices and control circuits to which they connect.

D. Coordinate features, accessories, and functions of each motor control center, each controller, and each installed unit with ratings and characteristics of supply circuit, motor, required control sequence, and duty cycle of motor and load.

PART 2 - PRODUCTS

2.1 MANUFACTURERS

A. Manufacturers:
1. Eaton Corporation; Cutler-Hammer Products
2. General Electric Company; GE Industrial Systems
3. Groupe Schneider / Square D
4. Rockwell Automation; Allen-Bradley Co.; Industrial Control Group

2.2 GENERAL

A. Motor control centers shall be suitable for the voltage, phase, and frequency shown on the Drawings.

B. Motor controller sizes and ratings shown on the Drawings are estimated sizes based on typical manufactured products. Each motor controller size and ratings for this Project shall be suitable for the approved motor application (constant speed, reversing, two-speed

single winding, two-speed two-winding, and motor nameplate full load current at rated voltage.

C. Motor control centers shall be modular arrangements of incoming supply unit, combination motor starter and feeder units, control devices, instruments, and other items mounted in individual compartments of vertical motor control center sections.

D. Circuit breakers and fused switches shall have stationary external operating handles, ON (closed) with the handle in UP position, OFF (open) with the handle in the DOWN position. Door-mounted operating handles and rotary switch and circuit breaker mechanisms are not acceptable.

2.3 CLASS, TYPE, AND RATINGS

A. Wiring: NEMA ICS 3, Class II, Type B. Specially prepared control wiring diagrams showing each remote device connection are required for each motor controller.

1. Equip units in Type B motor control centers with pull-apart control terminal strips or drawout terminal boards for external control connections.

B. Enclosures

1. Compartments: Modular; individual doors with concealed hinges and quick-captive screw fasteners. Interlocks on combination controller units requiring disconnecting means to be open before door can be opened or closed, except by operating a permissive release device requiring a tool.
2. Interchangeability: Compartments constructed to allow for removal of units without opening adjacent doors, disconnecting adjacent compartments, or disturbing operation of other units in motor control center; same size compartments to permit interchangeability and ready rearrangement of units, such as replacing three single units with a unit requiring three spaces, without cutting or welding.
3. Install combination starter units up to and including Size 3 on drawout mountings with connectors that automatically line up and connect with vertical-section buses while being racked into their normal, energized positions.
4. Individual feeder-tap units through 225-A rating shall have drawout mountings with connectors that automatically line up and connect with vertical-section buses while being racked into their normal, energized positions.
5. Wireways: Separate vertical wiring channel in each vertical section for vertical wiring to each unit compartment; with supports to hold wiring in place. 6 inch bottom wireway and 12 inch top wireway for outgoing wiring.

C. Short-Circuit Current Rating for Each Section: Fully rated and NRTL-listed and labeled for the available RMS symmetrical fault current at 480 VAC, three phase as follows:

1. MCC1; 22,000 amps
2. MCC2; 43,000 amps

2.4 BUSBARS

A. Material: Hard-drawn copper, tin-plated full length of main and plug-in busbars.

B. Continuous Current Ratings: As shown on the Drawings for horizontal and vertical main buses. Vertical plug-in busbars shall be minimum 600 amps.

C. Neutral Buses: Full size.

D. Equipment Ground Busbars: Bare ¼ x 2 inch copper main (horizontal) ground busbar bolted to enclosure. Vertical ground busbars shall be same materials of construction as vertical phase plug-in busbars, sized per NEC minimum requirements for equipment grounding conductors; bond to enclosure and each plug-in compartment.

E. Horizontal Busbar Arrangement: Main and ground busbars extended with same capacity the entire length of motor control center, with provision for future extension at both ends by bolt holes and captive busbar splice sections or equivalent.

F. Short-Circuit Withstand Rating: Same as short-circuit current rating of vertical section.

2.5 INCOMING SUPPLY UNITS

A. Incoming supply: Molded case circuit breaker suitable for bottom feed:

B. Molded Case Circuit Breaker:

1. Electronic Trip Unit: RMS sensing; field-replaceable rating plug; with the following field-adjustable settings:
   a. Instantaneous trip.
   b. Long- and short-time pickup levels
   c. Long- and short-time time adjustments
   d. Ground-fault pickup level, time delay, and I2t response
2. Accessories: Standard frame sizes, trip ratings, and number of poles.
   a. Lugs: Suitable for lugs specified in Division 26 Section “Wire and Cable” and wire sizes shown on the Drawings.
   b. Application Listing: Service entrance rated.

C. Transient Voltage Surge Suppressors: Connect to motor control center bus after the incoming supply main overcurrent protection device.

2.6 FEEDER UNITS

A. Feeder Units: Molded case thermal magnetic circuit breakers.

B. Molded-Case Circuit-Breaker Features and Accessories: Standard frame sizes, trip ratings, and number of poles.

1. Lugs: Suitable for lugs specified in Division 26 Section “Wire and Cable” and wire sizes shown on the Drawings.
2. Application Listing: Appropriate for application; Type HACR for heating, air-conditioning, and refrigerating equipment, SWD for lighting circuits.

2.7 COMBINATION MOTOR STARTER UNITS

A. Combination Motor Starters: Combination disconnecting means and motor starters as specified in this Section and shown on the Drawings.

1. Controller Disconnecting Means and Overcurrent Protection:
   a. Motor Circuit Protector: NEMA AB 1, motor circuit protector with field-adjustable magnetic trip coordinated with motor locked-rotor amperes.
2. Magnetic starter:
   a. Contactor: NEMA ICS 2, Class A, with continuous current rating as specified in NEMA standards, size 1 minimum.
   b. Overload Relay: Ambient-compensated type with inverse-time-current characteristic. Provide with heaters or sensors in each phase matched to nameplate full-load current of specific motor to which they connect and with appropriate adjustment for duty cycle.
3. Control Circuit: 120 V; obtained from integral control power transformer with capacity to operate connected pilot, indicating and control devices, plus 50 VA spare capacity unless a larger capacity is shown on the Drawings.
4. Auxiliary contacts as required for the control scheme, plus 1 N.O. and 1 N.C. spares.
5. Control Wiring:
   a. Provide control wiring as shown on the Drawings.
   b. Provide voltage-free contacts that close when the HOA switch is in the ‘Remote” position when required by the remote control system.

2.8 SPARE UNITS

A. Spare Units: Type, sizes, and ratings as shown on the Drawings.

2.9 SPACES

A. Spaces: Compartments fully bused and equipped with guide rails or equivalent, ready for insertion of drawout units.

2.10 CONTROL DEVICES

A. Control devices shall be factory-installed and factory-wired in controller enclosure.

B. Conform to NFPA 79 Electrical Standard for Industrial Machinery.

C. Control devices, including relays, pushbuttons, pilot lights, selector switches, shall conform to Division 26 Section "Electrical Control Components".

2.11 METERING

A. Multifunction Digital-Metering Monitor: UL-listed or -recognized, microprocessor-based unit suitable for four-wire systems and with the following features:

1. Inputs from sensors or 5-A current-transformer secondaries, and potential terminals rated to 600 V.
2. Switch-selectable digital display of the following:
   a. Phase Currents, Each Phase: Plus or minus 1 percent.
   b. Phase-to-Phase Voltages, Three Phase: Plus or minus 1 percent.
   c. Phase-to-Neutral Voltages, Three Phase: Plus or minus 1 percent.
   d. Three-Phase Real Power: Plus or minus 2 percent.
   e. Three-Phase Reactive Power: Plus or minus 2 percent.
   f. Power Factor: Plus or minus 2 percent.
   g. Frequency: Plus or minus 0.5 percent.
   h. Integrated Demand with Demand Interval Selectable from 5 to 60 Minutes: Plus or minus 2 percent.
3. Mounting: Display and control unit flush or semiflush mounted in instrument compartment door.

2.12 FACTORY FINISHES

A. Finish: Manufacturer's standard ANSI 61 light gray paint applied to factory-assembled and -tested, motor control centers before shipping.

2.13 QUALITY ASSURANCE

A. Factory Quality Certification
   1. Submit copy of factory quality assurance certificate.

B. Factory Assembly
   1. Motor control centers shall be manufactured in conformance with the factory quality certification documents.

C. Factory Tests
   1. Each MCC shall be factory tested as follows:
      a. Manufacturer’s standard inspections and tests
      b. 1000V megohmeter test on each busbar, phase-to-phase and phase-to-ground, after disconnecting devices sensitive to 500 VDC.
   2. Submit factory test report for approval prior to shipment.

2.14 SPARE PARTS

A. Provide minimum 10 spare fuses of each size and type furnished for each MCC.

2.15 PACKAGING FOR SHIPMENT

A. Wrap motor control centers with dessicant in heavy polyethylene film taped shut.

B. Bolt MCC shipping sections to wooden pallets to prevent tipping over and to provide method for transporting shipping sections.

C. Shipping sections shall be padded and corner-protected to protect components from damage during shipping.

2.16 WARRANTY

A. Provide parts and labor warranty in accordance with the General Provisions.

PART 3 - EXECUTION

3.1 PRE-INSTALLATION REQUIREMENTS

A. Floor, wall, and ceiling finishes and overhead welding operations shall be substantially complete, and area shall be “broom clean”, prior to commencing installation of the motor control centers.

3.2 INSTALLATION

A. Install motor control centers on concrete bases in conformance with MCC manufacturer’s installation instructions.

3.3 CONCRETE BASES

A. Coordinate size and location of concrete bases with approved MCC shop drawings.

B. Concrete materials and installation requirements shall be as specified in Division 3.

3.4 IDENTIFICATION IN THE FIELD

A. Identify motor control center, motor control center components, and control wiring according to Division 26 Section "Electrical Identification".

3.5 CONTROL WIRING INSTALLATION

A. Install wiring for motor control devices as shown on the Drawings.

3.6 GROUNDING AND BONDING

A. Ground MCC equipment according to Division 26 Section "Grounding” and as indicated on the Drawings.

3.7 CLEANING

A. On completion of installation, inspect interior and exterior of each motor control center. Remove paint splatters and other spots. Vacuum dirt and debris; do not use compressed air to assist in cleaning. Repair exposed surfaces to match original finish.

3.8 MANUFACTURER'S FIELD SERVICES

A. Engage a factory-authorized service representative to perform the following inspections, checks, and supervision of testing:
   1. Inspect field-assembled components, equipment installation, and electrical connections for compliance with the manufacturer's installation recommendations and requirements.
   2. Set field-adjustable, protective-relay trip characteristics as directed by the Engineer.
   3. Test and adjust controls and safety devices. Replace damaged and malfunctioning controls and components.
   4. Witness initial energization and perform or supervise startup services.
   5. Prepare written report to record the following:
      a. Inspections and checks carried out on site.
      b. Test procedures used.
      c. Test results that comply with requirements.
      d. Test results that do not comply with requirements and corrective action taken to achieve compliance with requirements

3.9 ACCEPTANCE TESTING

A. Prepare for acceptance tests as follows:
   1. Test insulation resistance for each motor control center element, bus, component, connecting supply, feeder, and control circuit.
   2. Test continuity of each circuit.

B. Perform the following field tests and inspections and prepare test reports:
   1. Perform each electrical test and visual and mechanical inspection described in the following NETA Acceptance Testing Specification Inspection and Test Procedures applicable to the equipment furnished for this project:
      a. 7.6.1.1 "Circuit Breakers, Air, Insulated-Case/Molded-Case"
      b. 7.10 "Instrument Transformers"
      c. 7.11 "Metering Devices"
      d. 7.13 "Grounding Systems"
      e. 7.14 "Ground-Fault Protection Systems, Low-Voltage"
      f. 7.16.2.1 "Motor Control, Motor Control Centers, Low-Voltage."
      g. 7.19.1 "Surge Arrestors, Low-Voltage"
   2. Certify compliance with test parameters.
   3. Correct malfunctioning units on-site, where possible, and retest to demonstrate compliance; otherwise, replace with new units and retest.

3.10 DEMONSTRATION AND TRAINING

A. Engage a factory-authorized service representative to train Owner's maintenance personnel to adjust, operate, and maintain components of motor control centers.

B. Review each page of the Operation and Maintenance Manuals during the training sessions.

3.11 FOLLOW-UP SERVICE

A. Infrared Scanning: One month after Substantial Completion, perform an infrared scanning of each Motor Control Center in conformance with NETA Acceptance Testing Specification 9 “Thermographic Survey”. Open motor control center doors so joints and connections are accessible to portable scanner. Use an infrared scanning device designed to measure temperature or to detect significant deviations from normal values. Provide calibration record for device.

B. Record of Infrared Scanning: Prepare a certified report that identifies motor control center checked and describes scanning results. Include notation of deficiencies detected, remedial action taken, and observations after remedial action. Provide a color photo along side an infrared photo of each motor control center in the report.

END OF SECTION

SECTION 26 27 26

WIRING DEVICES

PART 1 - GENERAL

1.1 SUMMARY

A. Provide switches, receptacles, and accessories required for a complete and fully functional installation, as shown on the Drawings and specified herein.

1.2 REFERENCE STANDARDS

A. Material and installation shall be in accordance with latest revisions of the following codes, standards and specifications, except where more stringent requirements have been specified herein:

1. American National Standard Institute (ANSI)
2. National Electrical Code (NEC)
3. National Electrical Manufacturers Association (NEMA)
4. Underwriters Laboratories, Inc. (UL)

1.3 SUBMITTALS

A. Manufacturer's Catalog Data

1. Submit manufacturer's catalog data describing the material and demonstrating conformance to the Specification and associated standards.

B. Other Submittals

1. Samples are not required for specified manufacturers and part numbers. If "equal" products are proposed, samples of both the "equal" and the specified product shall be submitted for comparison purposes. Equal products will not be considered unless samples are submitted.

PART 2 - PRODUCTS

2.1 GENERAL

A. Provide industrial grade heavy-duty wiring devices, in types, characteristics, grades, colors, and electrical ratings for applications indicated which are UL listed and which comply with NEMA WD 1 and other applicable UL, Federal, and NEMA standards.

B. Provide ivory color devices unless otherwise indicated.

C. Model or series numbers, where indicated, refer only to the specified manufacturer. Identical numbers by other manufacturers are not considered equal.

2.2 DUPLEX RECEPTACLES

A. Duplex receptacles shall be NEMA 5-20R rated 20 amperes at 120 VAC of the two-pole, three-wire type. They shall be suitable for use with a three-wire polarized plug having two parallel blades and shall have the third leg grounded. They shall meet the requirements of Federal Specification WC596.

B. Manufacturers:

1. Hubbell 5362 Series heavy-duty industrial grade.
2. Leviton 5362 Series heavy-duty industrial grade
3. Equal.

C. GFI Receptacles

1. Receptacles marked as GFI shall be Duplex, NEMA 5-20R, 20 amp, 120 VAC ground fault interrupter type. They shall be UL rated Class A, Group1. Single GFI receptacles providing "downstream" protection are not acceptable. GFI breakers used with conventional receptacles shall not be acceptable where GFI receptacles are shown.
2. Manufacturers:
   a. Hubbell Series GF5362
   b. Equal

2.3 SWITCHES

A. Wall switches shall be rated 20 amperes at 277 VAC, toggle operated, plastic enclosed, single pole, three-way or four-way as shown or required. They shall meet Federal Specification WS896. Switches shall have silver alloy contacts and provisions for side and back wiring.

B. Manufacturers:

1. Hubbell 1221 Series heavy-duty industrial grade
2. Leviton 1221 Series heavy-duty industrial grade
3. Arrow Hart 1221 Series heavy-duty industrial grade
4. Equal

2.4 ACCESSORIES

A. Wall Plates

1. Unless otherwise specified, wall plates for receptacles and switches shall be smooth, type 302 stainless steel. plates shall be:
   a. Hubbell S1 Series
   b. Arrow hart S1 Series
   c. Equal
2. Plates in unfinished areas shall be galvanized steel, unless otherwise noted.

3. Plates in wet, outdoor areas or on devices designated as weatherproof shall be of the corrosive resistant, gasketed weatherproof design.

B. Device boxes for wiring devices shall be as specified in the Section “Conduits”.

PART 3 - EXECUTION

3.1 INSTALLATION

A. Install wiring devices in outlet boxes with cubic inch capacity in conformance with NEC requirements.

B. Receptacles shall be mounted at 18 inches to the centerline of the device box above finished floor, unless otherwise indicated.

C. Switches shall be mounted 44 inches to the centerline of device box above finished floor on the handle side of doors unless otherwise indicated.

D. Install green grounding screw with NEC-sized copper grounding pigtail in tapped hole in each outlet box. Bond wiring device strap to pigtail.

E. Coordinate switch and receptacle locations and construction sequence with the work of other trades, in the same area to avoid conflicts.

F. Install outlet boxes, wiring devices and accessories as indicated, in accordance with manufacturer's written instructions, and applicable requirements of the NEC.

G. Protect installed outlet boxes from dirt and paint.

H. Install wiring devices after wiring is completed.

I. Protect installed wiring devices from paint.

J. Install cover plates after painting work is completed.

K. Label receptacles as described in Division 16 Section "Electrical Identification".

3.2 TESTING

A. Test installed, energized receptacles and switches for correct connection to phase, neutral, and ground wires.

B. Correct incorrectly wired switches and receptacles.

END OF SECTION

SECTION 26 28 16

ENCLOSED SWITCHES AND CIRCUIT BREAKERS

PART 1 - GENERAL

1.1 SUMMARY

A. Provide enclosed AC switches rated 600 V and less, of the following types:
   1. Non-Fused Disconnect Switches
   2. Fused Disconnect Switches

1.2 SUBMITTALS

A. Product Data: For each type of enclosed switch and circuit breaker. Include dimensions and manufacturer's technical data on features, performance, electrical characteristics, ratings, UL listing, and finishes.

B. Field quality-control test reports.

C. Operation and Maintenance Data:
   1. Routine maintenance requirements for enclosed switches and circuit breakers and all installed components.

1.3 DELIVERY, STORAGE, AND HANDLING

A. Store enclosed switches indoors in clean, dry space with uniform temperature to prevent condensation. Protect enclosed switches from exposure to dirt, fumes, water, corrosive substances, and physical damage.

1.4 COORDINATION

A. Coordinate layout and installation of enclosed switches with other construction including conduit, piping, equipment, and adjacent surfaces. Maintain required workspace clearances and required clearances for equipment access doors and panels.

1.5 SPARE PARTS

A. Furnish spare parts described below that match products installed and that are packaged with protective covering for storage and identified with labels describing contents.
   1. Spare Fuses: Furnish one spare for every five installed, but no fewer than one set of three of each type and rating.

PART 2 - PRODUCTS

2.1 GENERAL

A. Enclosure types shall be as specified in Division 26 Section "Electrical - General".

2.2 MANUFACTURERS

A. Subject to compliance with requirements, provide products by one of the following:
1. Eaton Corporation; Cutler-Hammer Products.
2. General Electrical Company.
3. Siemens.
4. Square D.

2.3 NON-FUSED DISCONNECT SWITCHES

A. Non-fused disconnect switches shall be heavy-duty, 3-pole, 600 volt, motor-rated, visible blade type, with cover interlock to prevent opening the door with the switch closed.

B. Provide external operating handle with padlocking provisions. Switch shall be closed when the handle is in the UP position, and open in the DOWN position. Rotary handles are not acceptable.

C. Provide insulated neutral bus when neutral wire is shown on the Drawings.

D. Provide copper ground connecting means for equipment grounding conductors.

E. Where indicated on the Drawings, provide auxiliary interlock contacts that open the motor control circuit before opening the motor branch circuit.

F. Non-fused disconnect switches shall be similar and equal to Square D Class 3110 Heavy Duty Safety Switches.

2.4 FUSED DISCONNECT SWITCHES

A. Fused disconnect switches shall be equal to the non-fused disconnect switches described above, except that fuse clips and fuses shall be provided as indicated on the Drawings.

PART 3 - EXECUTION

3.1 INSTALLATION

A. For wall-mounted enclosures, bolt units to channels bolted to wall. For wall-mounted enclosures not near walls, provide freestanding racks constructed from 1-1/2 x 1-1/2 inch channels.

3.2 IDENTIFICATION

A. Identify enclosed switches in conformance with Division 26 Section "Electrical Identification."

3.3 FIELD QUALITY CONTROL

A. Prepare for acceptance tests as follows:
   1. Test insulation resistance for each enclosed switch.
   2. Test continuity of each circuit.

B. Perform the following field tests and inspections and prepare test reports:
   1. Perform each electrical test and visual and mechanical inspection, except optional tests, stated in the following NETA Acceptance Testing Specification Inspection and Test Procedures:
      a. 7.5.1.1 "Switches, Air, Low-Voltage"
   2. Certify compliance with test parameters.
   3. Correct malfunctioning units on-site, where possible, and retest to demonstrate compliance; otherwise, replace with new units and retest.

END OF SECTION

SECTION 26 29 23

VARIABLE FREQUENCY CONTROLLERS

PART 1 - GENERAL

1.1 SUMMARY

A. Provide Variable Frequency Controllers (VFCs) in compliance with this Section for motors that drive mechanical equipment specified in other Divisions of the Specification.

B. Provide a harmonics analysis report for the proposed VFCs prior to submittal of shop drawings.

C. This Section describes requirements for variable frequency motor controllers for variable speed control of inverter-duty induction motors described in Division 26 Section “Electric Motors".

1.2 QUALIFICATIONS

A. Supplier Qualifications: Manufacturer’s authorized representative who is factory-trained and manufacturer-approved for installation of units required for this Project. Maintain, within 100 miles of Project site, a service center capable of providing training, parts, and emergency maintenance repairs.

1.3 DEFINITIONS

A. In addition to the definitions in Division 26 Section “Electrical - General”, the following definitions apply to this Section:

1. AC: Alternating Current
2. Converter: Converts AC to DC
3. DC: Direct Current
4. HP: Horsepower
5. I/O: Input / Output
6. IGBT: Insulated gate bipolar transistor.
7. Inverter: Converts DC to AC
8. PWM: Pulse-Width Modulated.
9. Point of Analysis: with reference to IEEE 519, the point of common coupling which shall be the motor control center main bus.
10. TDD: Total Demand Distortion as defined in IEEE 519
11. THD: Total Harmonic Distortion as defined in IEEE 519

1.4 REFERENCE STANDARDS

A. Comply with the following standards:

1. IEEE 519 IEEE Recommended Practices & Requirements for Harmonic Controls in Electrical Power Systems
2. NEMA FU 1 Low Voltage Cartridge Fuses

3. NEMA ICS 6 Industrial Control and Systems Enclosures
4. NEMA KS 1 Enclosed and Miscellaneous Distribution Equipment Switches (600 Volts Maximum)
5. NEMA MG 10 Energy Management Guide for Selection and Use of Fixed Frequency Medium AC Squirrel-Cage Polyphase Induction Motors
6. NFPA 70 National Electrical Code
7. NFPA 79 Electrical Standard for Industrial Machinery
8. UL 198C High-Interrupting-Capacity Fuses, Current-Limiting Types
9. UL 50 Safety Enclosures for Electrical Equipment
10. UL 508 Industrial Control Equipment

1.5 SUBMITTALS

A. Preconstruction Submittals

1. Qualifications data for Testing Firm and Testing Firm's Field Supervisor.
2. Qualification data for Manufacturer, including Quality Certification.
3. Preliminary Harmonic Analysis

B. Shop Drawings

1. Compliance Statement
2. Specially prepared shop drawings including the following:
   a. Equipment nameplate data and electrical ratings
   b. Weights and overall dimensions
   c. General arrangement, plan view, section view, elevation and sub-assembly drawings cross-indexed to a complete bill of materials listing all components and part numbers. Include layout of door-mounted components. Show conduit entry areas and field wiring termination points.
   d. Three-line AC power schematic diagrams.
   e. Control schematic showing all control devices.
   f. Field wiring diagram showing each external device connected.
   g. Installation instruction including details, required clearances for access, operation and maintenance, and special instructions for unloading and hoisting, short term and long term storage, and unpacking.

3. Harmonic Analysis Report

C. Product Data Sheets

1. Technical data sheets for manufactured equipment and sub-assemblies, marked to show equipment selected for this project. Include product data sheets in Shop Drawing submittal.

D. Test Reports

1. Factory test reports
2. Acceptance test reports

E. Manufacturer's Field Reports

1. Inspection of equipment installation (prior to energization and startup) report

2. Complete tabulation of equipment settings and adjustments, and functional testing report

F. Operation and Maintenance Data

1. Operation and Maintenance Instructions: For equipment and accessories, including pre-energization tests and checks, initial startup procedure, manufacturer's written instructions for testing and adjusting overcurrent protective devices, exploded views of major assemblies and sub-assemblies indexed to parts lists, maintenance instructions and recommended maintenance intervals, troubleshooting procedures, and contact details for spare parts purchase and technical support.
2. Training course materials

G. Closeout Submittals

1. Warranty

H. Additional requirements are specified in Division 26 Section “Electrical - General”.

1.6 QUALITY ASSURANCE

A. VFC sizing shall be based on the nameplate data for the motor selected by the mechanical equipment supplier to operate at variable frequency over the specified speed range.

B. Total Harmonic Distortion Limits: The following data shall be used by the VFC Supplier for calculation of total demand distortion in accordance with IEEE 519 Table 10.3 Harmonic Current Distortion Limits for 5% TDD at the Point of Analysis:

1. Minimum available fault current shall be as specified in the Division 26 Section “motor Control Centers” at the Point of Analysis.
2. Maximum demand load current (including VFCs) = MCC1, ____ amperes at MCC2.
3. Service Transformer: kVA as indicated on the Drawings with %Z, and X/R ratio obtained from the transformer manufacturer.
4. Linear load shall be the maximum demand load current calculated above, less any VFC loads.
5. The VFCs shall operate on the electrical power distribution system shown on the Drawings without exceeding 3% of the fundamental and 5% of the total harmonic voltage distortion at the Point of Analysis in accordance with IEEE 519-10.

1.7 PROJECT CONDITIONS

A. Ambient temperature, humidity, and altitude: Equipment shall be rated for continuous operation, capable of driving full load without derating, within the ambient temperature, humidity, and altitude ranges specified in Division 26 Section “Electrical - General”.

1.8 COORDINATION

A. The Contractor is required to coordinate selection of variable frequency controller to operate the controlled equipment satisfactorily and for a complete and fully functional

system. Variable frequency controllers shall be variable torque or constant torque type as appropriate for the load served.

B. Coordinate VFC output current with motor full load current rating.

C. Provide VFC-to-motor wire size and length data to the VFC manufacturer prior to shop drawing submittal such that the VFC manufacturer can include accessory devices (e.g. output line reactors and motor termination DV/DT reduction devices) that may be necessary to limit the impulse voltage at the motor to values within the inverter-duty motor insulation impulse voltage rating specified in Division 26 Section "Electric Motors".

D. Coordinate controller interfaces with pilot devices and control and signal circuits. Follow the VFC manufacturer's recommendations for power, control, and signal cable separation and related installation details.

PART 2 - PRODUCTS

2.1 MANUFACTURERS

A. Manufacturers:

1. Eaton Corporation; Cutler Hammer Products
2. General Electric Company; GE Industrial Systems
3. Group Schneider/Square D
4. Rockwell Automation; Allen Bradley Co.

2.2 GENERAL DESCRIPTION

A. Solid-state VFC with full-wave diode bridge AC-to-DC converter, and PWM-type IGBT output, integrated into MCC enclosures as shown on the Drawings. Accessories as specified herein, listed and labeled as a complete unit. Provide variable speed control of a NEMA Design B, 3-phase squirrel-cage induction motor by adjusting output voltage and frequency while maintaining a constant volts/hertz ratio.

B. VFCs may be 6, 12 or 18 pulse type (number of pulses during a single cycle of the three phase voltage), with or without harmonic filters, as necessary to meet the specified harmonic distortion limits.

C. 12 and 18 Pulse VFCs: Controllers shall be phase-shifting type. All components including phase shifting transformers, filters, etc. shall be mounted in the variable frequency motor controller enclosure, and shall be factory wired and tested as a complete system.

2.3 DRIVE PERFORMANCE REQUIREMENTS

A. The VFC shall control the motor speed over the range of 25 percent to 100 percent of base speed without motor forced-cooling accessories.

B. Provide VFC output line voltage conditioning devices such as output reactors, output filters, and motor termination filters as necessary, to reduce impulse voltage at the motor terminals to values acceptable for operation of inverter-duty motors having approximately 1600 volt 1 microsecond impulse voltage withstand rating as defined by NEMA MG 1.

2.4 CONTROLLER PERFORMANCE REQUIREMENTS:

A. Controllers shall be designed for operation with the following performance:

1. Minimum Efficiency: 95 percent at 60 Hz, full load.
2. Minimum Displacement Power Factor: 95 percent.
3. Constant Torque Controller Overload Capability: 150% of continuous current output for 60 seconds.
4. Variable Torque Controller Overload Capability: 110% of continuous current output for 60 seconds; 150% of continuous current output for 3 seconds.
5. Starting Torque: provide starting boost up to 150%
6. Speed Regulation: Plus or minus 1 percent without tachometer feedback.

B. Controllers shall be equipped with the following internal adjustable functions:

1. Minimum Speed: 5 to 25 percent of maximum rpm.
2. Maximum Speed: 80 to 100 percent of maximum rpm.
3. Acceleration Ramp: 2 to 22 seconds.
4. Deceleration Ramp: 2 to 22 seconds.
5. Current Limit: 50 to a minimum of 110 percent of maximum rating.
6. Slip Compensation: adjustable
7. Skip frequency bands: minimum of three to avoid mechanical equipment critical frequencies
8. Carrier frequency: adjustable

C. Controllers shall have the following self-protection and reliability features:

1. Under- and over-voltage trips; inverter over-temperature, overload, and over-current trips.
2. Motor Overload Relay: Adjustable and capable of NEMA 250, Class 20 performance.
3. Notch filter to prevent operation of the controller-motor-load combination at a natural frequency of the combination.
4. Instantaneous line-to-line and line-to-ground over-current trips.
5. Loss-of-phase protection.
6. Short-circuit protection.

D. Historical Logging Information and Displays:

1. Real-time clock with current time and date.
2. Running log of total power versus time.
3. Total run time.
4. Fault log, maintaining last four faults with time and date stamp for each.

2.5 CONTROLLER ACCESSORIES

A. Provide accessories as specified below:

1. Provide current limiting fuses at the input to the inverter for all VFCs. Fuses shall be specifically designed for applications requiring protection of solid-state electronic power components.
2. Harmonic Filter: Provide where required. Filter shall consist of a 5% impedance input reactor and passive filter tuned to the fifth harmonic. Capacitors shall be individually fused. Filter shall have a contactor to disconnect capacitors when motor is off. Filter controls shall operate at 120 VAC and shall be powered from control power transformers located in the VFC MCC compartments.
3. VFC Output Filtering: Provide where required. Output line reactors and filtering devices shall limit voltage at motor terminal (at VFC carrier frequencies) to less than the motor impulse voltage rating.
4. Control Devices: Provide control devices as shown on the Drawings, as recommended by the manufacturer and as necessary for a complete installation. Pushbuttons, selector switches and indicating lights shall be mounted on the enclosure door

2.6 SPECIAL APPLICATIONS

A. Catch a Spinning Load: Bi-directional automatic speed search shall be capable of starting into rotating loads spinning in either direction and returning motor to set speed in proper direction, without damage to controller, motor, or load.

B. Automatic Reset/Restart: Attempts three restarts after controller fault or on return of power after an interruption and before shutting down for manual reset or fault correction.

2.7 KEYPAD/DISPLAY

A. Keypad/display shall be mounted on the enclosure compartment door.

B. Keypad shall have the following control functions:
1. LOCAL-OFF-REMOTE selection for start-stop commands.
2. LOCAL-REMOTE selection for speed reference command.
3. Motor START and STOP commands.
4. RESET pushbutton for variable frequency controller faults.
5. RAISE – LOWER speed commands.

C. Display shall indicate the following parameters:
1. Output frequency (Hz).
2. Motor speed (rpm).
3. Motor status (running, stop, fault).
4. Motor current (amperes).
5. Motor torque (percent).
6. Fault or alarm status (code).
7. DC-link voltage (VDC).
8. Output voltage (V).

2.8 CONTROLS INTERFACE:

A. Remote START and STOP commands shall be a single voltage-free contact (close to start and open to stop).

B. Remote Signal Inputs: Accept a 4-20 milliamp DC speed input command.

C. Output Signal Interface: Provide a minimum of one isolated analog output signal (4-20 milliamp DC), which can be programmed to any of the following:

1. Output frequency (Hz).
2. Output current (load).
3. Motor torque (percent).
4. Motor speed (rpm).
5. Set-point frequency (Hz).

D. Voltage-free, Form C, 10 amp 120 V AC relay outputs shall be provided for each of the following:

1. RUN status (quantity as shown on the Drawings)
2. FAULT

2.9 FACTORY TEST

A. Each controller shall be factory tested at rated full load current and an ambient temperature of 40 degrees C for a period of not less than 24 hours. If a component fails, it shall be replaced and the test shall be repeated for the full time period.

B. A certified copy of the factory Test Report shall be furnished to the Engineer prior to shipping the controller to the Project site.

2.10 WARRANTY

A. Provide parts and labor warranty in accordance with the General Provisions.

PART 3 - EXECUTION

3.1 FIELD TESTING AND SETUP BY VFC MANUFACTURER

A. Prepare equipment for VFC manufacturer representative's inspection, testing, setup and acceptance tests as follows:

1. Vacuum clean interior and wipe clean the exterior of each VFC after removing all foreign objects and construction debris. Follow the manufacturer's instructions.
2. Test insulation resistance of power and control circuits in accordance with manufacturer's installation instructions after disconnecting devices that may be damaged by test voltage and current.
3. Test continuity of each external circuit with low voltage battery-operated continuity tester. Install temporary jumpers where needed to verify accuracy of point-to-point power and control wiring connections.

B. Engage a factory-authorized service representative to perform the following:

1. Inspect completed VFC installation, and review Contractor's report of tests performed prior to energization, for compliance with VFC manufacturer's instructions and recommendations. Advise the Engineer when each VFC is ready for energization.
2. Setup and adjust controllers, components, and equipment after receiving permission from the Engineer to energize the VFC. VFC startup, including setup, direction-of-rotation test, and speed command response, shall be carried out with the motor output shaft disconnected from the driven mechanical equipment where possible.
3. After satisfactory operation of the drive (controller and motor) has been demonstrated, the mechanical equipment shall be connected to the motor shaft for mechanical equipment startup and commissioning tests.
4. Assist in startup of completed electrical and mechanical equipment.
5. The variable frequency motor controller manufacturer's designated representative shall supervise a running field test in the presence of the Owner and the driven mechanical equipment manufacturer's representative.
6. The manufacturer's representative shall ensure the proper operation of each unit in manual and automatic modes over the full operating range. Test shall verify all manual and automatic controls function properly and all electrical protection devices, safeties, and trips work properly.
7. The controller manufacturer's representative shall program the available "skip frequency" ranges to avoid critical equipment frequencies when requested by the Engineer.
8. If any deficiencies are revealed, such deficiencies shall be corrected and the tests shall be repeated.
9. Submit VFC manufacturer's inspection, test, and setup test report to the Engineer for record.

3.2 ACCEPTANCE TESTING

A. Perform the following field tests and inspections and prepare test reports:

1. Perform electrical test and visual and mechanical inspection stated in NETA Acceptance Testing Specifications, Section 7.17 "Adjustable Speed Drive Systems".
2. Certify compliance with test parameters.
3. Harmonics Test: Compliance with IEEE 519 shall be verified using a calibrated harmonic voltage and current analyzer with tape record and file downloading capabilities. Voltage and current distortion through the 15th harmonic shall be verified by field measurements of the harmonic distortion difference at the point of common coupling with the VFCs operating. Measurements shall be taken in the presence of the Engineer.
4. Replace damaged and malfunctioning controls and equipment.

B. Remove malfunctioning components, replace with new components, and retest as specified above.

C. Test reports shall include the following:

1. Test procedures used.
2. Test results that comply with requirements.

3. Test results that do not comply with requirements and corrective actions taken to achieve compliance with requirements.

3.3 DEMONSTRATION AND TRAINING

A. Engage the services of a factory-authorized service representative to train Owner's personnel.

B. The authorized service representative shall instruct the Owner's personnel in the programming, operation and maintenance of the variable frequency motor controller.

C. A proposed training course schedule and a complete description of the training, shall be submitted to the Owner and the Engineer at least 30 days in advance of the proposed training date. Manufacturer’s instructions and recommendations for maintenance, troubleshooting, and parts replacement shall be reviewed during the training course.

END OF SECTION

SECTION 26 32 13

DIESEL ENGINE DRIVEN GENERATOR SET

PART 1 - GENERAL

1.1 SUMMARY

A. Provide diesel engine driven generator set for optional standby service, as shown on the Drawings and as specified herein.

1.2 SUMMARY

A. This Section includes packaged diesel engine driven generator sets with the following components and accessories:

1. Engine
2. Generator
3. Generator set control panel
4. Engine starting battery with charger
5. Engine coolant heater
6. Engine exhaust silencer
7. Exhaust piping external to engine
8. Weatherproof sound-attenuated enclosure
9. Remote stop switch

1.3 DEFINITIONS

A. In addition to the definitions in Division 26 Section "Electrical - General", the following definitions apply to this Section:

1. Emergency Systems: refer to NEC Section 700 for definition
2. EPSS: emergency power supply system (NFPA 110 definition)
3. Generator: commonly used term for a rotating three phase brushless alternator with 60Hz output voltage
4. Generator set: a complete assembly of engine and generator set components capable of generating electricity
5. Legally Required Standby Systems: refer to NEC Section 701 for definition
6. Optional Standby Systems: refer to NEC Article 702 for definition
7. Operational Bandwidth: The total variation from the lowest to highest value of a parameter over the range of conditions indicated, expressed as a percentage of the nominal value of the parameter.
8. Steady-State Voltage Modulation: The uniform cyclical variation of voltage within the operational bandwidth, expressed in Hertz or cycles per second.

1.4 QUALIFICATIONS

A. Manufacturer's Factory Qualifications: Manufacturing facilities shall have accreditation to ISO 9000:2000 or an equivalent quality management system acceptable to the

Engineer. The manufacturing company shall be listed in a published NRTL directory of companies offering NRTL-listed and labeled products.

B. Supplier Qualifications: Manufacturer's authorized representative who is factory-trained and manufacturer-approved for installation of units required for this Project. Maintain, within 200 miles, of Project site, a service center capable of providing training, parts, and emergency maintenance repairs.

C. Electrical Components, Devices, and Accessories: Listed and labeled as defined in NFPA 70, Article 100, by a testing agency acceptable to the AHJ, and marked for intended use.

1.5 REFERENCE STANDARDS

A. Comply with the following standards in effect at the time of bid submittal unless otherwise noted in Division 1:

1. ANSI/IEEE 43-2000 IEEE Recommended Practice for Testing Insulation Resistance of Rotating Machinery
2. ANSI/IEEE 95-2002 IEEE Recommended Practice for Insulation Testing of AC Electric Machinery (2300 V and Above) With High Direct Voltage
3. ANSI/IEEE 112-1996 IEEE Standard Test Procedure for Polyphase Induction Motors and Generators
4. ANSI/IEEE 115-1995 (R2002) IEEE Guide: Test Procedures for Synchronous Machines, Part 1--Acceptance and Performance Testing, Part II--Test Procedures and Parameter Determination for Dynamic Analysis
5. ANSI/IEEE 117-1974 (R1991) IEEE Standard Test Procedure for Evaluation of Systems of Insulating Materials for Random-Wound AC Electric Machinery
6. ANSI/IEEE 286-2000 IEEE Recommended Practice for Measurement of Power Factor Tip-Up of Electric Machinery Stator Coil Insulation
7. ANSI/IEEE 1107-1996 IEEE Recommended Practice for Thermal Evaluation of Sealed Insulation Systems for AC Electric Machinery Employing Random Wound Stator Coils
8. ANSI/IEEE 1434-2000 IEEE Trial-Use Guide to the Measurement of Partial Discharges in Rotating Machinery
9. NEMA ICS 6 Industrial Control and Systems Enclosures
10. NEMA MG 1 Motors and Generators
11. UL 50 Safety Enclosures for Electrical Equipment
12. UL 489 Molded-Case Circuit Breakers, Molded-Case Switches, and Circuit-Breaker Enclosures
13. UL 508 Industrial Control Equipment
14. UL 1066 Standard for Low-Voltage AC and DC Power Circuit Breakers Used in Enclosures

    NFPA 37 Standard for the Installation and Use of Stationary Combustion Engines and Gas Turbines

1.6 ENVIRONMENTAL CONDITIONS

A. The generator set in its outdoor weatherproof enclosure shall be suitable for operation when exposed to local weather conditions, including wind-driven precipitation, and an outdoor minimum ambient temperature of -10º F.

B. In addition, the generator set shall be suitable for the environmental conditions indicated in Division 26 section “Electrical-General”.

1.7 SUBMITTALS

A. Submittals shall conform to the General Provisions.

B. Shop Drawings

1. Detail drawings for equipment assemblies indicating dimensions, weights, structural design recommendations for dynamic loading, required clearances for maintenance and operations, method of field assembly, components, and location and size of each field connection.
2. Dimensioned outline plan and elevation drawings of engine-generator set and other specified components.
3. Wiring Diagrams: Power, signal, and control wiring. Show factory wiring and field wiring, phase rotation and grounding connections.

C. Product Data: Include the following:

1. Manufacturer's engine and generator technical data, including the following:
   a. Ratings
   b. Performance
   c. Governor data
   d. Voltage regulator data
   e. Exciter and excitation power supply data
   f. Accessories

D. Design Data

1. Generator electrical ratings and winding characteristics, including thermal damage curve, subtransient reactance, transient reactance, short circuit ratings, voltage regulation, and nameplate data
2. Detailed description of engine overspeed device.
3. Time-current characteristic curves for generator overcurrent protective device
4. Coordination Drawings: Submit drawings specially prepared by the Contractor for this Project, including floor plans and sections, drawn to scale. Include conduit stub-up and connection locations with dimensions for the generator power terminal box, generator accessories terminal box, control panel, battery, coolant heater, and other specified engine accessories requiring field wiring. Show the following:
   a. Clearances for access to generator and engine components.
   b. Connections to fuel oil supply and return piping, and exhaust piping.
   c. Exhaust silencer and insulation.
   d. Anchor bolts and vibration isolators.

E. Test Reports

1. Certified prototype-unit test report, accompanied by certified test reports for components and accessories that are equivalent, but not identical, to those tested on prototype unit.
2. Factory test reports, including sound measurement and exhaust emission test reports.
3. Acceptance test reports.

F. Certificates:

1. Certification of Torsional Vibration Compatibility: Comply with NFPA 110.

G. Manufacturer's Instructions

1. Unloading, hoisting, rigging, short term storage, long term storage, and installation instructions
2. Method of field assembly, and location and size of each field connection
3. Battery filling, initial charging, battery charger settings
4. Generator set installation, testing, and commissioning instructions with checklists

H. Manufacturer's Field Reports

1. Inspection of equipment installation (prior to energization and startup)
2. Acceptance test report
3. Training, including notification to Owner's Representative and class attendance list
4. Maintenance service

I. Operation and Maintenance Data

1. Operation and Maintenance Manuals for engine, generator, and accessories.

J. Closeout Submittals

1. Training course materials
2. Callback and follow-up service reports

K. Warranty: Special warranty specified in this Section.

1.8 QUALITY ASSURANCE

A. Source Limitations: Obtain generator set and auxiliary components from a single Supplier.

B. Engine Exhaust Emissions: Comply with applicable state and local government regulations in effect at the project location.

C. Noise Emissions: Comply with applicable state and local government requirements applicable to sound emitted by generator set including engine, engine exhaust, engine cooling-air intake and discharge, and other components of installation.

1.9 COORDINATION

A. Coordinate layout and installation of generator sets with the work of other trades.

B. Coordinate size and location of concrete bases with structural design. Cast anchor bolt inserts for vibration isolators in accordance with approved shop drawings. Comply with generator set manufacturer's installation requirements and recommendations. Reinforced concrete requirements are specified in Division 3.

1.10 MAINTENANCE SERVICE

A. Initial Maintenance Service: Beginning at Substantial Completion, provide 12 months full maintenance by factory-trained employees of manufacturer's designated service organization. Include quarterly exercising to check for proper starting, load transfer, and running under load. Include routine preventive maintenance as recommended by manufacturer and adjusting as required for proper operation. Maintenance agreements shall include parts and supplies as used in manufacture and installation of original equipment. Replace any spare parts taken from Owner's inventory.

PART 2 - PRODUCTS

2.1 MANUFACTURERS

A. Manufacturers:
1. Caterpillar, Inc.
2. Cummins, Inc.
3. Kohler Co.
4. Or approved equal

2.2 ENGINE-GENERATOR SET

A. Generator set shall be a coordinated assembly of compatible components.

B. Power Output Ratings: 1500kW / 1875kVA rating standby rating to operate as a unit as evidenced by records of prototype testing.

C. Output Voltage: 480 / 277 V 3 phase 4 wire 60 Hz.

D. Engine Starting Time: 10 seconds maximum.

E. Safety Standard: Comply with ASME B15.1.

F. Nameplates: Each major system component shall be equipped with a nameplate to identify manufacturer's name and address, and model and serial number of component.

G. Mounting Frame: Adequate strength and rigidity to maintain alignment of mounted components without depending on concrete foundation. Mounting frame shall be free

from sharp edges and corners and shall have lifting attachments arranged for lifting with slings without damaging components.

1. Rigging Diagram: Inscribed on metal plate permanently attached to mounting frame to indicate location and lifting capacity of each lifting attachment and generator set center of gravity..

2.3 GENERATOR SET PERFORMANCE

A. Oversizing generator compared with the rated power output of the engine is permissible to meet specified performance.

1. Nameplate Data for Oversized Generator: Show ratings required by the Contract Documents rather than ratings based on engine kW output.

B. Steady-State Voltage Operational Bandwidth: 2 percent of rated output voltage from no load to full load.

C. Steady-State Voltage Modulation Frequency: Less than 1 Hz.

D. Transient Voltage Performance: Not more than 10 percent variation for 50 percent step-load increase or decrease. Voltage shall recover and remain within the steady-state operating band within 0.5 second.

E. Steady-State Frequency Operational Bandwidth: Plus or minus 0.25 percent of rated frequency from no load to full load.

F. Steady-State Frequency Stability: When system is operating at any constant load within the rated load, there shall be no random speed variations outside the steady-state operational band and no hunting or surging of speed.

G. Transient Frequency Performance: Less than 2-Hz variation for a 50 percent step-load increase or decrease. Frequency shall recover and remain within the steady-state operating band within three seconds.

H. Output Waveform: At no load, harmonic content measured line to neutral shall not exceed 2 percent total with no slot ripple. The telephone influence factor, determined according to NEMA MG 1, shall not exceed 50 percent.

I. Sustained Short-Circuit Current: For a 3-phase, bolted short circuit at system output terminals, the system shall supply a minimum of 300 percent of rated full-load current for not less than 10 seconds and then clear the fault automatically, without damage to winding insulation or other generator system components.

J. Excitation System: Performance shall be unaffected by voltage distortion caused by nonlinear load.

2.4 ENGINE

A. Fuel: No. 2 diesel fuel oil, to ASTM D975.

B. Rated Engine Speed: 1800 rpm maximum.

C. Maximum Piston Speed for Four-Cycle Engines: 2250 fpm (11.4 m/s).

D. Lubrication System: The following items are mounted on engine or skid:

1. Lube Oil Filter: Rated to remove 90 percent of particles 5 micrometers and smaller while passing full flow. Provide automatic bypass.
2. Thermostatic Control Valve: Control flow in system to maintain optimum oil temperature. Unit shall be capable of full flow and be designed to be fail-safe.
3. Crankcase Drain: Arranged for complete gravity drainage to an easily removable container with no disassembly and without use of pumps, siphons, special tools, or appliances.

E. Engine Fuel System:

1. Main Fuel Pump: Mounted on engine. Pump ensures adequate primary fuel flow under starting and load conditions.
2. Relief-Bypass Valve: Automatically regulates pressure in fuel line and returns excess fuel to source.

F. Coolant Jacket Heater: Electric-immersion type, factory installed in coolant jacket system. Comply with NFPA 110 requirements for Level 1 equipment for heater capacity.

G. Governor: Adjustable isochronous, with speed sensing.

H. Overspeed protection: Separate overspeed protection device, independent from governor, designed for fail-safe operation in the event of loss of engine speed sensing and circuit faults.

2.5 ENGINE COOLING SYSTEM

A. Description: Closed loop, liquid cooled, with integral radiator, factory mounted on engine-generator set mounting frame and integral engine-driven coolant pump.

B. Integral Radiator: Rated for specified coolant, cooled by engine-driven fan.

C. Coolant: Solution of 50 percent ethylene-glycol-based antifreeze and 50 percent water, with anticorrosion additives as recommended by engine manufacturer.

D. Temperature Control: Self-contained, thermostatic-control valve modulates coolant flow automatically to maintain optimum constant coolant temperature as recommended by engine manufacturer.

E. Coolant Hose: Flexible assembly with inside surface of nonporous rubber and outer covering of aging-, ultraviolet-, and abrasion-resistant fabric.

1. Rating: Working pressure suitable for the application, and noncollapsible under vacuum.
2. End Fittings: Flanges or steel pipe nipples with clamps to suit piping and equipment connections.

2.6 FUEL SUPPLY SYSTEM

A. Comply with NFPA 30.

2.7 ENGINE EXHAUST SYSTEM

A. Exhaust silencer: Critical type, sized as recommended by engine manufacturer; sound level measured at a distance of 10 feet (3 m) from exhaust discharge shall be 85 dBA or less.

B. Condensate Drain for silencer: Schedule 40, black steel pipe connected to silencer drain outlet through a full port ball valve.

C. Connection from Engine to Exhaust System: Flexible section of corrugated stainless-steel pipe.

D. Connection from Exhaust Pipe to Silencer: Stainless-steel expansion joint with liner.

E. Outdoor Exhaust Piping after exhaust silencer: ASTM A 53/A 53M, Schedule 40, welded, black steel, with welded joints and fittings.

2.8 COMBUSTION-AIR INTAKE

A. Air filter: Heavy-duty, engine-mounted air cleaner with replaceable dry-filter element.

B. Indication: Provide differential pressure gauge with maximum recommended differential pressure clearly marked in red.

C. Controls: SPDT contacts from engine control panel actuate to initiate opening of combustion air damper.

2.9 STARTING SYSTEM

A. Description: 24 V DC from battery, with negative ground and including the following items:

1. Starting System Components: Sized for reliable operation during two sequential engine-cranking cycles with ambient temperature at maximum.
2. Cranking Motor: Heavy-duty units with solenoid engagement and mechanical release from engine flywheel.
3. Cranking Cycle: four 15 second cranking cycles separated by 15 seconds off.
4. Battery: Sized to provide specified cranking cycle power at least twice without recharging.
5. Battery Cable: Size as recommended by engine manufacturer. Include required interconnecting conductors and connection accessories.
6. Battery-Charging Alternator: Factory mounted on engine with solid-state voltage regulation and 65-A minimum continuous rating.
7. Battery Charger: Current-limiting, automatic equalizing and float-charging type. Unit shall comply with UL 1236 and include the following features:

a. Operation: Equalizing charge rate of 10 A shall be initiated automatically after battery has lost charge until an adjustable equalizing voltage is achieved at battery terminals. Unit shall then be automatically switched to a lower float-charging mode and shall continue to operate in that mode until battery is discharged again.

b. Automatic Temperature Compensation: Adjust float and equalize voltages for variations in ambient temperature from minus 40 deg C to plus 60 deg C to prevent overcharging at high temperatures and undercharging at low temperatures.

c. Automatic Voltage Regulation: Maintain constant output voltage regardless of input voltage variations up to plus or minus 10 percent.

d. Ammeter and Voltmeter: Flush mounted in door. Meters shall indicate charging rates.

e. Safety Functions: Sense abnormally low battery voltage and close contacts providing low battery voltage indication on control and monitoring panel. Sense high battery voltage and loss of ac input or dc output of battery charger. Either condition shall actuate SPDT contacts that provide a battery-charger malfunction indication at system control and monitoring panel.

f. Enclosure and Mounting: NEMA 250, Type 1, wall-mounted cabinet.

2.10 ENGINE-GENERATOR SET CONTROL PANEL

A. Functional Description: When mode selector switch on the engine-generator set control panel is in the AUTOMATIC position, remote control contacts close to initiate starting and stopping the generator set after a cool-down period. When mode selector switch is switched to ON, the generator set starts. The OFF position of the same switch initiates generator set shutdown with engine cool-down period. During generator set operation, equipment failures automatically shut down the generator set and initiate alarms. Operation of the remote EMERGENCY STOP switch shuts down the generator set without an engine cool-down period.

B. Configuration: Operating and safety indications, protective devices, basic system controls, and engine gages shall be grouped in a common engine-generator set control panel mounted on the engine-generator set. Mounting method shall isolate the control panel from generator set vibration.

1. AC voltmeter.
2. AC ammeter.
3. AC frequency meter.
4. DC voltmeter (alternator battery charging).
5. Engine-coolant temperature gage.
6. Engine lubricating-oil pressure gage.
7. Running-time meter.
8. Ammeter-voltmeter, phase-selector switch(es).
9. Generator-voltage adjusting rheostat.
10. Overspeed shutdown device.
11. Coolant high-temperature shutdown device.
12. Coolant low-level shutdown device.
13. Oil low-pressure shutdown device.
14. Retain two subparagraphs below on most projects.

15. Fuel tank derangement alarm.
16. Fuel tank high-level shutdown of fuel supply alarm.

C. Supporting Items: Include sensors, transducers, terminals, relays, and other devices and include wiring required to support specified items. Locate sensors and other supporting items on engine or generator, unless otherwise indicated.

D. Common Remote Audible Alarm: Comply with NFPA 110 requirements for Level 1 systems. Include necessary contacts and terminals in control and monitoring panel.

E. Remote Emergency Stop Pushbutton: Flush; wall mounted, unless otherwise indicated; and labeled. Pushbutton shall be red mushroom type, maintained contact (pull to reset), fully guarded.

2.11 GENERATOR OVERCURRENT AND FAULT PROTECTION

A. Generator Circuit Breaker: Insulated-case, electronic-trip type; 100 percent rated; complying with UL 489.
1. Tripping Characteristics: Adjustable long-time and short-time delay and instantaneous.
2. Trip Settings: Matched to generator thermal damage curve as closely as possible.
3. Shunt Trip: Connected to trip breaker when generator set is shut down by other protective devices.
4. Mounting: Adjacent to generator terminal box or integrated with control and monitoring panel.

B. Ground-Fault Indication: Comply with NFPA 70, Article 700-7(d). Integrate ground-fault alarm indication with other generator set alarm indications.

2.12 GENERATOR, EXCITER, AND VOLTAGE REGULATOR

A. Comply with NEMA MG 1 and specified performance requirements.

B. Drive Coupling: Generator shaft shall be connected to engine flywheel by means of a flexible steel coupling. Exciter shall be mounted on the generator rotor.

C. Windings: 2/3 winding pitch stator with one slot skew to eliminate slot harmonics, and fully linked amortisseur winding. .

D. Generator Insulation: Class F, operated at Class F temperature rise.

E. Excitation: Brushless rotating exciter. Sustain generator output performance under short-circuit conditions as specified.

F. Exciter DC power supply: permanent magnet DC generator in-line coupled to generator shaft.

G. Stator-Winding Leads: For multiple voltage units, bring out both ends to terminal box to permit future reconnection for other voltages. Generator leads shall be terminated at insulated copper busbars with NEMA standard drilling for units rated over 300 amps.

H. Overspeed: Generator construction shall prevent mechanical, electrical, and thermal damage up to 125 percent of base speed.

I. Enclosure: Open drip-proof, fully guarded, with stainless steel insect screens.

J. Instrument Transformers: Mounted within generator enclosure.

K. Voltage Regulator: Solid-state type, three phase true RMS voltage sensing, providing specified performance.

1. Adjusting rheostat (or potentiometer) on engine generator set control panel shall provide plus or minus 5 percent adjustment of output voltage operating band.

L. Winding Heaters: Thermostatically controlled strip or rod heaters sized and controlled to maintain stator windings above dew point when the generator is not running. Turn off when engine is running. Heaters shall be operated at half normal voltage for long life.

2.13 OUTDOOR GENERATOR SET ENCLOSURE

A. Description: Prefabricated outdoor non-walk-in sound attenuated enclosure with the following features:

1. Construction: Metal-clad, integral structural-steel-framed enclosure anchored to concrete foundation.
2. Sound attenuation: 85 dB(A) at 33 feet, free field, including exhaust silencer.
3. Structural Design and Anchorage:
   a. Wind load: up to 120 mph
   b. Roof load: 40 lbs/sq ft.
   c. Distributed floor load: 200 lbs/sq ft.
4. Rain test: no water intrusion at 4 inches/hour

2.14 FINISHES

A. Indoor and Outdoor Enclosures and Components: Manufacturer's standard enamel over corrosion-resistant pretreatment and compatible standard primer.

2.15 SOURCE QUALITY CONTROL

A. Prototype Testing: Factory test engine-generator set using same engine model, constructed of identical or equivalent components and equipped with identical or equivalent accessories.

1. Tests: Comply with NFPA 110, Level 1 energy converters in Paragraphs 3.2.1, 3.2.1.1, and 3.2.1.2.
2. Generator Tests: Comply with IEEE 115.

3. Components and Accessories: Items furnished with installed unit that are not identical to those on tested prototype shall have been factory tested to demonstrate compatibility and reliability.

B. Project-Specific Equipment Tests: Before shipment, factory test engine-generator set and other system components and accessories manufactured specifically for this Project. Perform tests at rated load and power factor. Include the following tests:

1. Full load run.
2. Maximum power.
3. Voltage regulation.
4. Transient and steady-state governing.
5. Single-step load pickup.
6. Safety shutdown.

C. Report factory test results within 10 days of completion of test.

2.16 SPARE PARTS AND SPECIAL TOOLS

A. Furnish extra materials described below that match products installed and that are packaged with protective covering for storage and identified with labels describing contents.

1. Fuses: five for every 10 of each type and rating, but not less than six of each.
2. Indicator Lamps: Not less than ten of each type.
3. Filters: Two sets each of lubricating oil, fuel, and combustion-air filters.

2.17 WARRANTY

A. Special Warranty: Manufacturer's standard form in which manufacturer agrees to repair or replace components of generator sets and associated auxiliary components that fail in materials or workmanship within specified warranty period.

1. Warranty Period: Five years from date of Substantial Completion.

PART 3 - EXECUTION

3.1 INSTALLATION PREREQUISITES

A. Examine areas, equipment bases, and conditions, with Installer present, for compliance with requirements for installation and other conditions affecting generator set performance.

B. Examine roughing-in of piping systems and electrical connections. Verify actual locations of connections before generator set installation.

C. Proceed with installation only after unsatisfactory conditions have been corrected.

3.2 CONCRETE BASES

A. Coordinate dimensional requirements for concrete bases, inserts, and stub-ups with generator set manufacturer concrete materials and installation requirements are specified in Division 3.

3.3 DELIVERY, STORAGE, AND HANDLING

A. Deliver, store, and handle generator sets and accessories in accordance with manufacturer's instructions.

3.4 INSTALLATION

A. Comply with generator set manufacturers' written installation and alignment instructions and with NFPA 110.

B. Install generator set level on concrete base.

1. Vibration Isolation: Mount generator sets on restrained spring isolators.

C. Install packaged engine generator to provide access, without removing connections or accessories, for periodic maintenance.

D. Electrical Wiring: Install and wire electrical devices furnished by equipment manufacturers but not specified to be factory wired.

3.5 CONNECTIONS

A. Ground equipment according to Division 26 Section "Grounding."

B. Connect wiring according to Division 26 Section "Wire and Cable."

C. Tighten electrical connectors and terminals according to manufacturer's published torque-tightening values. If manufacturer's torque values are not indicated, use those specified in UL 486A and UL 486B.

3.6 MANUFACTURER'S FIELD SERVICES

A. Manufacturer's Field Service: Engage a factory-authorized service representative to inspect, test, and adjust field-assembled components and equipment installation, including connections, and to assist in acceptance testing. Report results in writing.

B. Engage a factory-authorized service representative to perform startup service.

C. Perform field tests and inspections and prepare test reports.

1. Perform each electrical test and visual and mechanical inspection stated in NETA Acceptance Testing Specifications INSPECTION AND TEST PROCEDURES

7.15.2 and 7.22.1 (except for vibration baseline test). Certify compliance with test parameters.

2. Perform tests recommended by manufacturer.
3. NFPA 110 Acceptance Tests: Perform tests required by NFPA 110 that are additional to those specified here including, but not limited to, the following:
   a. Single-step full-load pickup test.

4. Battery Tests: Equalize charging of battery cells according to manufacturer's written instructions. Record individual cell voltages.
   a. Measure charging voltage and voltages between available battery terminals for full-charging and float-charging conditions. Check electrolyte level and specific gravity under both conditions.
   b. Test for contact integrity of all connectors. Perform an integrity load test and a capacity load test for the battery.
   c. Verify acceptance of charge for each element of the battery after discharge.
   d. Verify that measurements are within manufacturer's specifications.

5. Battery-Charger Tests: Verify specified rates of charge for both equalizing and float-charging conditions.
6. System Integrity Tests: Methodically verify proper installation, connection, and integrity of each element of engine-generator system before and during system operation. Check for air, exhaust, and fluid leaks.
7. Exhaust Emissions Test: Comply with applicable government test criteria.
8. Voltage and Frequency Transient Stability Tests: Use recording oscilloscope to measure voltage and frequency transients for 50 and 100 percent step-load increases and decreases, and verify that performance is as specified.
9. Harmonic-Content Tests: Measure harmonic content of output voltage under 25 percent and at 100 percent of rated linear load. Verify that harmonic content is within specified limits.

D. Coordinate tests with tests for transfer system and run them concurrently.

E. Test instruments shall have been calibrated within the last 12 months, traceable to standards of the National Institute for Standards and Technology, and adequate for making positive observation of test results. Make calibration records available for examination on request.

F. Leak Test: After installation, charge system and test for leaks. Repair leaks and retest until no leaks exist.

G. Operational Test: After electrical circuitry has been energized, start units to confirm proper motor rotation and unit operation.

H. Test and adjust controls and safeties. Replace damaged and malfunctioning controls and equipment.

I. Remove and replace malfunctioning units and retest as specified above.

J. Retest: Correct deficiencies identified by tests and observations and retest until specified requirements are met.

K. Report results of tests and inspections in writing. Record adjustable relay settings and measured insulation resistances, time delays, and other values and observations. Attach a label or tag to each tested component indicating satisfactory completion of tests.

3.7 STARTUP SERVICE

A. Follow the instructions of the factory-authorized service representative during startup.

B. Inspect field-assembled components and equipment installation, including piping and electrical connections. Report results in writing.

C. Complete installation and startup checks according to manufacturer's written instructions.

3.8 DEMONSTRATION AND TRAINING

A. Engage a factory-authorized service representative to train Owner's maintenance personnel to adjust, operate, and maintain generator sets.

END OF SECTION

SECTION 26 51 00

LIGHTING

PART 1 - GENERAL

1.1 SUMMARY

A. Provide lighting fixtures with lamps, ballasts, poles, hangers, options, and accessories required for a complete lighting system installation, as shown on the Drawings and specified herein.

1.2 REFERENCES

A. Materials and installation shall be in accordance with latest revisions of the following codes, standards and specifications, except where more stringent requirements have been specified herein:

1. American National Standard Institute (ANSI)
2. National Electrical Code (NEC)
3. National Electrical Manufacturers Association (NEMA)
4. Underwriters Laboratories, Inc. (UL)

1.3 COORDINATION REQUIREMENTS

A. Coordinate layout and installation of lighting fixtures with piping and HVAC equipment and ductwork.

1.4 SUBMITTALS

A. Conform to the General Provisions.

B. Compliance Statement: With each submittal, include a Compliance Statement listing each Specification Section, and Part 1, 2, and 3 Sub-Sections, stating, paragraph-by-paragraph, compliance with the Specification, each minor nonconformity that is within the intent of the Specification, and proposed non-conformities. Provide short description of minor non-conformities, and detailed explanation of other non-conformities.

C. Product Data: manufacturers’ catalog data sheets for lighting fixtures, lamps, ballasts, hangers, poles, controls, and accessories, with sufficient information to demonstrate conformance to specified requirements. Include photometric data for each fixture type.

D. Isofootcandle Layout Drawings: submit computer-generated isofootcandle layout drawings for the following:

1. Outdoor area lighting
2. Roadway lighting

E. Samples: submit upon Engineer's request.

F. Manufacturer Instructions: for installation, operation, and maintenance.

G. Closeout Submittals
   1. Operation and Maintenance Data
   2. Warranty Documentation

1.5 QUALITY ASSURANCE

A. Qualifications of Manufacturer
   1. Manufacturer’s Factory Qualifications: Manufacturing facilities shall have accreditation to ISO 9000:2000 or an equivalent quality management system acceptable to the Engineer.

1.6 DELIVERY, STORAGE AND HANDLING

A. Deliver lighting fixtures in original sealed factory cartons.

B. Store lighting fixtures in clean dry indoor rooms with a temporary dehumidifier and electric heating to maintain the storeroom between 5 and 40 deg. C with humidity less than 90%. Comply with manufacturer's additional written instructions for storing and periodic inspection and testing.

C. Handle lighting fixtures according to manufacturer's written instructions.

1.7 WARRANTY

A. Provide parts and labor warranty in accordance with the General Provisions.

PART 2 - PRODUCTS

2.1 ACCEPTABLE MANUFACTURERS

A. Manufacturers and catalog numbers are shown on the Drawings to establish a basis of design, and to establish the quality of materials of construction. Equivalent lighting fixtures using the equal materials for housings, housing finishes, lenses, reflectors, refractors, gaskets, and latches, and with equivalent photometrics, may be submitted, and shall be acceptable if approved by the Engineer.

2.2 LIGHTING FIXTURES

A. Provide lighting fixtures and accessories as shown on the Drawings.

B. Lighting fixtures shall be NRTL-listed and labeled.

C. Adjustable fixtures shall be capable of being locked in position.

D. Unpainted fixture parts shall be corrosion-resistant. Damp location, wet location, and hazardous (classified) location metallic fixture parts shall be anodized or high-purity aluminum, stainless steel, or equivalent corrosion-resistant materials.

E. Recessed fixtures shall be designed to fit the make and type of ceiling to be installed, and shall include plaster frames where installed in plaster ceilings, mounting yokes where required for support from ceiling construction, and independent supports from ceiling grid.

F. Outdoor wall-packs shall be full cutoff type.

2.3 BALLASTS

A. Provide lighting ballasts as shown on the Drawings. Ballasts shall be “A” sound rated and NRTL listed and labeled, and shall be as recommended by the lamp manufacturer for optimum light output, lamp life, and energy efficiency.

B. Provide low-temperature ballasts with minimum starting temperature of 0 deg. F. for all fixtures to be mounted outdoors and in low temperature areas (for example, garages and walk-in refrigerated areas). Interior ballasts shall be capable of starting at 50 deg. F.

C. Linear Fluorescent Electronic Ballasts: Rapid-start, solid-state, full-light-output, energy-saving type compatible with energy-saving lamps specified.

1. Conform to FCC Regulations Part 15, Subpart J. for electromagnetic interference.
2. Conform to IEEE C62.41, "Guide for Surge Voltages in Low-Voltage AC Power Circuits," Category A, for resistance to voltage surges for normal and common modes.
3. Minimum Power Factor: 90 percent.
4. Minimum Operating Frequency: 20,000 Hz.
5. Third Harmonic Content of Ballast Current: Less than 33 percent.
6. Total harmonic distortion: Less than 10%.
7. Ballast factor: greater than 1.0.

D. Metal Halide Ballasts (except 250 watts, 277 volts, below): Energy-Saving constant wattage magnetic ballasts, 90% power factor (minimum), constant wattage autotransformer, full-light-output type, compatible with lamps indicated.

E. Metal Halide Ballasts (250 watts, 277 volts): Energy-Saving pulse-start linear reactor type with integral igniter, full-light-output type, compatible with lamps indicated.

F. Ballasts shall be as manufactured by Advance, GE, Magnetek, or equal.

2.4 LAMPS

A. Provide lamps as shown on the Drawings.

B. T-8 fluorescent lamps shall be 3200-3500K color temperature, energy efficient, low-mercury type . Fluorescent lamps shall be of the type designed to operate efficiently with the energy efficient ballasts provided. Fluorescent lamps shall be Philips Lighting "Alto", Osram / Sylvania "Ecologic", GE "Ecolux", or equal. Low-mercury lamps shall pass the TCLP (Toxic Characteristic Leaching Procedure) standard of 0.2 mg/l.

C. Metal halide lamps shall be coated, pulse-start type.

D. Replace all lamps broken or missing at the time of Substantial Completion.

2.5 LIGHT POLES

A. Light poles shall be square cross-section, anodized aluminum, dark bronze color, and shall be furnished with stainless steel anchor bolts, washers, and nuts for installation in concrete pole bases, and shall be as shown on the Drawings.

B. Provide handhole with gasketed screw cover with stainless steel tamper-resistant screws at base of pole for access to cables and ballasts.

C. Poles and anchor bolts shall be rated for 110-mph (minimum) wind loading with the installed lighting fixtures indicated on the Drawings.

PART 3 - EXECUTION

3.1 EXAMINATION

A. Examine areas and conditions for compliance with manufacturer’s installation recommendations and requirements.

B. Examine walls, floors, roofs, and concrete bases for suitable conditions for installation, for example, all overhead and ceiling work of other trades is complete.

C. Verify that ground connections are in place and that installation of equipment grounding conductors described in Section “Grounding” is complete.

D. Proceed with installation only after unsatisfactory conditions have been corrected.

3.2 INSTALLATION

A. All lighting equipment shall have enclosures, hangers and supports, fittings and outlet boxes suitable for the location as specified in Division 26 Section “Electrical – General”.

B. Lighting fixture locations shown on the Drawings are approximate. Exact locations shall be coordinated with piping, ductwork, and structural components to avoid interferences with HVAC ducts and equipment, plumbing systems, process piping, roof drains, and other interferences.

C. Mounting height for fixtures shall be as shown on the Drawings. Where no mounting height is shown, fixtures shall be mounted to give the minimum of shading from pipes, ducts, beams and other obstructions.

D. Pendant type fixtures shall be suspended by means of conduit stems and ball hangers from outlet boxes in non-hazardous areas, and shall be mounted with 12 inch minimum length explosion-proof couplings in Hazardous (Classified) Locations. Threaded connections shall be locked with set screws or equivalent methods. Verify field conditions for mechanical and structural interferences prior to locating outlet boxes for pendant mounted lighting fixtures..

E. Reflectors, reflector cones and visible trim of all lighting fixtures shall not be installed until completion of plastering, ceiling tile work, painting and general cleanup. Handle carefully handled to avoid scratching.

F. Where fixtures are installed in suspended ceiling, each fixture shall be anchored securely to grid system by means of caddy clips or T-Bar hangers manufactured by Tomic Electric or equal.

G. Wiring for Exit Lighting circuits shall be installed in separate raceway systems in accordance with the NEC.

H. Lighting circuits for exit lights shall be connected to the unswitched room lighting circuit conductors in accordance with the NEC.

I. Concrete pole bases shall be installed as shown on the Drawings. Refer to Division 3 for cast-in-place concrete and reinforcing steel requirements. Align poles plumb and grout pole bases on the day of pole installation.

3.3 FIELD QUALITY CONTROL

A. Prepare for lighting fixture circuit energization as follows:

1. Test continuity and insulation resistance for each power supply circuit.
2. After installing equipment but before power supply is energized, verify that grounding system is completed.
3. Verify that equipment is installed and connected according to the Contract Documents.

3.4 CLEANING

A. On completion of installation, inspect interior and exterior of lighting fixtures. Remove dust, dirt, paint splatters and other spots from exterior and wipe down with damp cotton cloth. Touch up exposed surfaces to match original finish. Vacuum interior surfaces “white glove clean”, removing all dirt and debris while taking care to protect static-sensitive and fragile parts from damage. Do not use compressed air to assist in cleaning.

3.5 PROTECTION

A. Open parabolic fluorescent lighting fixtures shall be kept covered with protective wrapping until all other construction activities in the room have been completed, and the room is clean and ready for occupancy.

B. Lighting fixtures shall be left in clean, operational condition, free of dirt and cosmetic defects.

C. Protect installed equipment from damage through Substantial Completion.

END OF SECTION

SECTION 28 31 11

ADDRESSABLE FIRE ALARM SYSTEMS

PART 1 - GENERAL

1.1 SUMMARY

A. Section Includes:
1. Fire-alarm control unit.
2. Manual fire-alarm boxes.
3. System smoke detectors.
4. Heat detectors.
5. Notification appliances.
6. Addressable interface device.

1.2 DEFINITIONS

A. LED: Light-emitting diode.

B. NICET: National Institute for Certification in Engineering Technologies.

1.3 SYSTEM DESCRIPTION

A. Noncoded, UL Listed addressable system with automatic sensitivity control of smoke detectors and dedicated to fire-alarm service only.

1.4 SUBMITTALS

A. General Submittal Requirements:
1. Submittals shall be approved by authorities having jurisdiction prior to submitting them to Architect.
2. Shop Drawings shall be prepared by persons with the following qualifications:
   a. Trained and certified by manufacturer in fire-alarm system design.
   b. NICET-certified fire-alarm technician, Level III minimum.
   c. Licensed or certified by authorities having jurisdiction.

B. Product Data: For each type of product indicated.

C. Shop Drawings: For fire-alarm system. Include plans, elevations, sections, details, and attachments to other work.
1. Comply with recommendations in the "Documentation" Section of the "Fundamentals of Fire Alarm Systems" Chapter in NFPA 72.
2. Include voltage drop calculations for notification appliance circuits.
3. Include battery-size calculations.
4. Include performance parameters and installation details for each detector, verifying that each detector is listed for complete range of air velocity, temperature, and humidity possible when air-handling system is operating.

5. Include plans, sections, and elevations of heating, ventilating, and air-conditioning ducts, drawn to scale and coordinating installation of duct smoke detectors and access to them. Show critical dimensions that relate to placement and support of sampling tubes, detector housing, and remote status and alarm indicators. Locate detectors according to manufacturer's written recommendations.
6. Include voice/alarm signaling-service equipment rack or console layout, grounding schematic, amplifier power calculation, and single-line connection diagram.
7. Include floor plans to indicate final outlet locations showing address of each addressable device. Show size and route of cable and conduits.

D. Delegated-Design Submittal: For smoke and heat detectors indicated to comply with performance requirements and design criteria, including analysis data signed and sealed by the qualified professional engineer responsible for their preparation.
1. Drawings showing the location of each smoke and heat detector, ratings of each, and installation details as needed to comply with listing conditions of the detector.
2. Design Calculations: Calculate requirements for selecting the spacing and sensitivity of detection, complying with NFPA 72.

E. Qualification Data: For qualified Installer.

F. Field quality-control reports.

G. Operation and Maintenance Data: For fire-alarm systems and components to include in emergency, operation, and maintenance manuals. In addition to items specified in Special Provisions “SP-25 O&M Manual”, include the following:
1. Comply with the "Records" Section of the "Inspection, Testing and Maintenance" Chapter in NFPA 72.
2. Provide "Record of Completion Documents" according to NFPA 72 article "Permanent Records" in the "Records" Section of the "Inspection, Testing and Maintenance" Chapter.
3. Record copy of site-specific software.
4. Provide "Maintenance, Inspection and Testing Records" according to NFPA 72 article of the same name and include the following:
   a. Frequency of testing of installed components.
   b. Frequency of inspection of installed components.
   c. Requirements and recommendations related to results of maintenance.
   d. Manufacturer's user training manuals.
5. Manufacturer's required maintenance related to system warranty requirements.
6. Abbreviated operating instructions for mounting at fire-alarm control unit.
7. Copy of NFPA 25.

H. Software and Firmware Operational Documentation:
1. Software operating and upgrade manuals.
2. Program Software Backup: On magnetic media or compact disk, complete with data files.
3. Device address list.
4. Printout of software application and graphic screens.

1.5 QUALITY ASSURANCE

A. Installer Qualifications: Personnel shall be trained and certified by manufacturer for installation of units required for this Project.

B. Installer Qualifications: Installation shall be by personnel certified by NICET as fire-alarm Level III technician.

C. Source Limitations for Fire-Alarm System and Components: Obtain fire-alarm system from single source from single manufacturer. Components shall be compatible with, and operate as, an extension of existing system.

D. Electrical Components, Devices, and Accessories: Listed and labeled as defined in NFPA 70, by a qualified testing agency, and marked for intended location and application.

1.6 SOFTWARE SERVICE AGREEMENT

A. Comply with UL 864.

B. Technical Support: Beginning with Substantial Completion, provide software support for two years.

C. Upgrade Service: Update software to latest version at Project completion. Install and program software upgrades that become available within two years from date of Substantial Completion. Upgrading software shall include operating system. Upgrade shall include new or revised licenses for use of software.

1. Provide 30 days' notice to Owner to allow scheduling and access to system and to allow Owner to upgrade computer equipment if necessary.

1.7 EXTRA MATERIALS

A. Furnish extra materials that match products installed and that are packaged with protective covering for storage and identified with labels describing contents.

1. Lamps for Remote Indicating Lamp Units: Quantity equal to 10 percent of amount installed, but no fewer than 1 unit.
2. Lamps for Strobe Units: Quantity equal to 10 percent of amount installed, but no fewer than 1 unit.
3. Smoke Detectors and Heat Detectors: Quantity equal to 10 percent of amount of each type installed, but no fewer than 1 unit of each type.
4. Detector Bases: Quantity equal to 2 percent of amount of each type installed, but no fewer than 1 unit of each type.
5. Keys and Tools: One extra set for access to locked and tamperproofed components.
6. Audible and Visual Notification Appliances: One of each type installed.
7. Fuses: Two of each type installed in the system.

PART 2 - PRODUCTS

2.1 MANUFACTURERS

A. Manufacturers: Subject to compliance with requirements, provide UL Listed products.

2.2 SYSTEMS OPERATIONAL DESCRIPTION

A. Fire-alarm signal initiation shall be by one or more of the following devices:
1. Manual stations.
2. Heat detectors.
3. Smoke detectors.
4. Verified automatic alarm operation of smoke detectors.
5. Heat detectors.

B. Fire-alarm signal shall initiate the following actions:
1. Continuously operate alarm notification appliances.
2. Identify alarm at fire-alarm control unit.
3. Transmit an alarm signal to the fire/security monitoring system.
4. Record events in the system memory.

C. System trouble signal initiation shall be by one or more of the following devices and actions:
1. Open circuits, shorts, and grounds in designated circuits.
2. Opening, tampering with, or removing alarm-initiating and supervisory signal-initiating devices.
3. Loss of primary power at fire-alarm control unit.
4. Ground or a single break in fire-alarm control unit internal circuits.
5. Abnormal ac voltage at fire-alarm control unit.
6. Break in standby battery circuitry.
7. Failure of battery charging.
8. Abnormal position of any switch at fire-alarm control unit or annunciator.

D. System Trouble and Supervisory Signal Actions: Initiate notification appliance and annunciate at fire-alarm control unit. Record the event on system printer.

2.3 FIRE-ALARM CONTROL UNIT

A. General Requirements for Fire-Alarm Control Unit:
1. Field-programmable, microprocessor-based, modular, power-limited design with electronic modules, complying with UL 864 and listed and labeled by an NRTL.
   a. System software and programs shall be held in flash electrically erasable programmable read-only memory (EEPROM), retaining the information through failure of primary and secondary power supplies.
   b. Include a real-time clock for time annotation of events on the event recorder and printer.
2. Addressable initiation devices that communicate device identity and status.
   a. Smoke sensors shall additionally communicate sensitivity setting and allow for adjustment of sensitivity at fire-alarm control unit.

b. Temperature sensors shall additionally test for and communicate the sensitivity range of the device.

3. Addressable control circuits for operation of mechanical equipment.

B. Alphanumeric Display and System Controls: Arranged for interface between human operator at fire-alarm control unit and addressable system components including annunciation and supervision. Display alarm, supervisory, and component status messages and the programming and control menu.

1. Annunciator and Display: Liquid-crystal type, 80 characters, minimum.
2. Keypad: Arranged to permit entry and execution of programming, display, and control commands and to indicate control commands to be entered into the system for control of smoke-detector sensitivity and other parameters.

C. Circuits:

1. Initiating Device, Notification Appliance, and Signaling Line Circuits: NFPA 72.
   a. Initiating Device Circuits: Style D.
   b. Notification Appliance Circuits: Style Z.
   c. Signaling Line Circuits: Style 4.
   d. Install no more than 50 addressable devices on each signaling line circuit.
2. Serial Interfaces: One RS-232 port for printer.

D. Smoke-Alarm Verification:

1. Initiate audible and visible indication of an "alarm-verification" signal at fire-alarm control unit.
2. Activate an NRTL-listed and -approved "alarm-verification" sequence at fire-alarm control unit and detector.
3. Record events in system memory.
4. Sound general alarm if the alarm is verified.
5. Cancel fire-alarm control unit indication and system reset if the alarm is not verified.

E. Notification Appliance Circuit: Operation shall sound in a three-pulse temporal pattern.

F. Remote Smoke-Detector Sensitivity Adjustment: Controls shall select specific addressable smoke detectors for adjustment, display their current status and sensitivity settings, and change those settings. Allow controls to be used to program repetitive, time-scheduled, and automated changes in sensitivity of specific detector groups. Record sensitivity adjustments and sensitivity-adjustment schedule changes in system memory, and print out the final adjusted values on system printer.

G. Transmission to Remote Alarm Receiving Station: Automatically transmit alarm, supervisory, and trouble signals to a remote alarm station via the fire/security monitoring system.

H. Primary Power: 24-V dc obtained from 120-V ac service and a power-supply module. Initiating devices, notification appliances, signaling lines, trouble signals shall be powered by 24-V dc source.

1. Alarm current draw of entire fire-alarm system shall not exceed 80 percent of the power-supply module rating.

I. Secondary Power: 24-V dc supply system with batteries, automatic battery charger, and automatic transfer switch. Size secondary power for 60 hours of standby and 30 minutes of alarm.

1. Batteries: Sealed lead calcium.

J. Instructions: Computer printout or typewritten instruction card mounted behind a plastic or glass cover in a stainless-steel or aluminum frame. Include interpretation and describe appropriate response for displays and signals. Briefly describe the functional operation of the system under normal, alarm, and trouble conditions.

2.4 MANUAL FIRE-ALARM BOXES

A. General Requirements for Manual Fire-Alarm Boxes: Comply with UL 38. Boxes shall be finished in red with molded, raised-letter operating instructions in contrasting color; shall show visible indication of operation; and shall be mounted on recessed outlet box. If indicated as surface mounted, provide manufacturer's surface back box.

1. Double-action mechanism requiring two actions to initiate an alarm, pull-lever type; with integral addressable module arranged to communicate manual-station status (normal, alarm, or trouble) to fire-alarm control unit.
2. Station Reset: Key- or wrench-operated switch.

2.5 SYSTEM SMOKE DETECTORS

A. General Requirements for System Smoke Detectors:

1. Comply with UL 268; operating at 24-V dc, nominal.
2. Integral Addressable Module: Arranged to communicate detector status (normal, alarm, or trouble) to fire-alarm control unit.
3. Base Mounting: Detector and associated electronic components shall be mounted in a twist-lock module that connects to a fixed base. Provide terminals in the fixed base for connection to building wiring.
4. Self-Restoring: Detectors do not require resetting or readjustment after actuation to restore them to normal operation.
5. Integral Visual-Indicating Light: LED type indicating detector has operated and power-on status.
6. Remote Control: Unless otherwise indicated, detectors shall be analog-addressable type, individually monitored at fire-alarm control unit for calibration, sensitivity, and alarm condition and individually adjustable for sensitivity by fire-alarm control unit.

   a. Provide multiple levels of detection sensitivity for each sensor.

B. Photoelectric Smoke Detectors:

1. Detector address shall be accessible from fire-alarm control unit and shall be able to identify the detector's location within the system and its sensitivity setting.
2. An operator at fire-alarm control unit, having the designated access level, shall be able to manually access the following for each detector:
   a. Primary status.
   b. Device type.
   c. Present average value.

d. Present sensitivity selected.
e. Sensor range (normal, dirty, etc.).

2.6 HEAT DETECTORS

A. General Requirements for Heat Detectors: Comply with UL 521.

B. Heat Detector, Combination Type: Actuated by either a fixed temperature of 135 deg F (57 deg C or a rate of rise that exceeds 15 deg F (8 deg C) per minute unless otherwise indicated.

1. Mounting: Twist-lock base interchangeable with smoke-detector bases.
2. Integral Addressable Module: Arranged to communicate detector status (normal, alarm, or trouble) to fire-alarm control unit.

2.7 NOTIFICATION APPLIANCES

A. General Requirements for Notification Appliances: Individually addressed, connected to a signaling line circuit, equipped for mounting as indicated and with screw terminals for system connections.

B. General Requirements for Notification Appliances: Connected to notification appliance signal circuits, zoned as indicated, equipped for mounting as indicated and with screw terminals for system connections.

1. Combination Devices: Factory-integrated audible and visible devices in a single-mounting assembly, equipped for mounting as indicated and with screw terminals for system connections.

C. Horns: Electric-vibrating-polarized type, 24-V dc; with provision for housing the operating mechanism behind a grille. Comply with UL 464. Horns shall produce a sound-pressure level of 90 dBA, measured 10 feet (3 m) from the horn, using the coded signal prescribed in UL 464 test protocol.

D. Visible Notification Appliances: Xenon strobe lights comply with UL 1971, with clear or nominal white polycarbonate lens mounted on an aluminum faceplate. The word "FIRE" is engraved in minimum 1-inch- (25-mm-) high letters on the lens.

1. Rated Light Output:
   a. 30 or 75 cd as indicated on the drawings.
2. Mounting: Wall mounted unless otherwise indicated.
3. For units with guards to prevent physical damage, light output ratings shall be determined with guards in place.
4. Flashing shall be in a temporal pattern, synchronized with other units.
5. Strobe Leads: Factory connected to screw terminals.
6. Mounting Faceplate: Factory finished red.

2.8 DEVICE GUARDS (IF PROVIDED)

A. Description: Welded wire mesh of size and shape for the manual station, smoke detector, gong, or other device requiring protection.

1. Factory fabricated and furnished by manufacturer of device.

2. Finish: Paint of color to match the protected device.

PART 3 - EXECUTION

3.1 EQUIPMENT INSTALLATION

A. Comply with NFPA 72 for installation of fire-alarm equipment.

B. Equipment Mounting: Install fire-alarm control unit on wall with tops of cabinets not more than 72 inches (1830 mm) above the finished floor.

C. Smoke- or Heat-Detector Spacing:

1. Comply with NFPA 72, "Smoke-Sensing Fire Detectors" Section in the "Initiating Devices" Chapter, for smoke-detector spacing.
2. Comply with NFPA 72, "Heat-Sensing Fire Detectors" Section in the "Initiating Devices" Chapter, for heat-detector spacing.
3. Smooth ceiling spacing shall not exceed **30 feet (9 m)**.
4. Spacing of detectors for irregular areas, for irregular ceiling construction, and for high ceiling areas shall be determined according to Appendix A or Appendix B in NFPA 72.
5. HVAC: Locate detectors not closer than **3 feet (1 m)** from air-supply diffuser or return-air opening.
6. Lighting Fixtures: Locate detectors not closer than 12 inches (300 mm) from any part of a lighting fixture.

D. Audible/Visual Alarm-Indicating Appliances: Install not less than 6 inches (150 mm) below the ceiling.

E. Visible Alarm-Indicating Appliances: Install at least 6 inches (150 mm) below the ceiling.

F. Fire-Alarm Control Unit: Surface mounted, with tops of cabinets not more than 72 inches (1830 mm) above the finished floor.

3.2 IDENTIFICATION

A. Identify system components, wiring, cabling, and terminals. Comply with requirements for identification specified in Division 26 Section "Electrical Identification."

B. Install framed instructions in a location visible from fire-alarm control unit.

3.3 GROUNDING

A. Ground fire-alarm control unit and associated circuits; comply with IEEE 1100. Install a ground wire from main service ground to fire-alarm control unit.

3.4 FIELD QUALITY CONTROL

A. Field tests shall be witnessed by local authorities having jurisdiction.

B. Manufacturer's Field Service: Engage a factory-authorized service representative to inspect, test, and adjust components, assemblies, and equipment installations, including connections.

C. Perform tests and inspections.

1. Manufacturer's Field Service: Engage a factory-authorized service representative to inspect components, assemblies, and equipment installations, including connections, and to assist in testing.

D. Tests and Inspections:

1. Visual Inspection: Conduct visual inspection prior to testing.
   a. Inspection shall be based on completed Record Drawings and system documentation that is required by NFPA 72 in its "Completion Documents, Preparation" Table in the "Documentation" Section of the "Fundamentals of Fire Alarm Systems" Chapter.
   b. Comply with "Visual Inspection Frequencies" Table in the "Inspection" Section of the "Inspection, Testing and Maintenance" Chapter in NFPA 72; retain the "Initial/Reacceptance" column and list only the installed components.
2. System Testing: Comply with "Test Methods" Table in the "Testing" Section of the "Inspection, Testing and Maintenance" Chapter in NFPA 72.
3. Test audible appliances for the public operating mode according to manufacturer's written instructions. Perform the test using a portable sound-level meter complying with Type 2 requirements in ANSI S1.4.
4. Test audible appliances for the private operating mode according to manufacturer's written instructions.
5. Test visible appliances for the public operating mode according to manufacturer's written instructions.
6. Factory-authorized service representative shall prepare the "Fire Alarm System Record of Completion" in the "Documentation" Section of the "Fundamentals of Fire Alarm Systems" Chapter in NFPA 72 and the "Inspection and Testing Form" in the "Records" Section of the "Inspection, Testing and Maintenance" Chapter in NFPA 72.

E. Reacceptance Testing: Perform reacceptance testing to verify the proper operation of added or replaced devices and appliances.

F. Fire-alarm system will be considered defective if it does not pass tests and inspections.

G. Prepare test and inspection reports.

H. Maintenance Test and Inspection: Perform tests and inspections listed for weekly, monthly, quarterly, and semiannual periods. Use forms developed for initial tests and inspections.

I. Annual Test and Inspection: One year after date of Substantial Completion, test fire-alarm system complying with visual and testing inspection requirements in NFPA 72. Use forms developed for initial tests and inspections.

3.5 DEMONSTRATION

A. Engage a factory-authorized service representative to train Owner's maintenance personnel to adjust, operate, and maintain fire-alarm system.

END OF SECTION

Pump Curves

Backwash Pump

Model: 3196	Size: 8X10-15	Group: XLTi	60Hz	RPM Variable	Stages: 1

Job/Inq.No. :
Purchaser : UNDEFINED
End User :
Issued by : Joy Hutchinson
Item/Equip.No. : Backwash
Quotation No. : JFH10-09-03 01
Date : 09/03/2010
Service : Backwash
Order No. :
Rev. : 0

Operating Conditions

Liquid:	Water	Published Efficiency:	69.5 %
Temp.:	70.0 deg F	Rated Pump Efficiency:	69.0 %
S.G./Visc.:	1.000/1.000 cp	Rated Total Power:	57.5 hp
NPSHa:		Non-Overloading Power:	80.1 hp
Vapor Press:		Imp. Dia. First 1 Stg(s):	15.0000 in
Solid size:		Max. Solids Size:	0.0000 in
% Susp. Solids (by wtg):			

Pump Performance @ 1142 RPM

Suction Specific Speed:	9,518 gpm(US) ft
Min. Thermal Flow:	N/A

Notes: 1. The Mechanical seal increased drag effect on power and efficiency is not included, unless the correction is shown in the appropriate field above. 2. Magnetic drive eddy current and viscous effect on power and efficiency is not included. 3. Elevated temperature effects on performance are not included. 4. Non Overloading power does not reflect v-belt/gear losses.

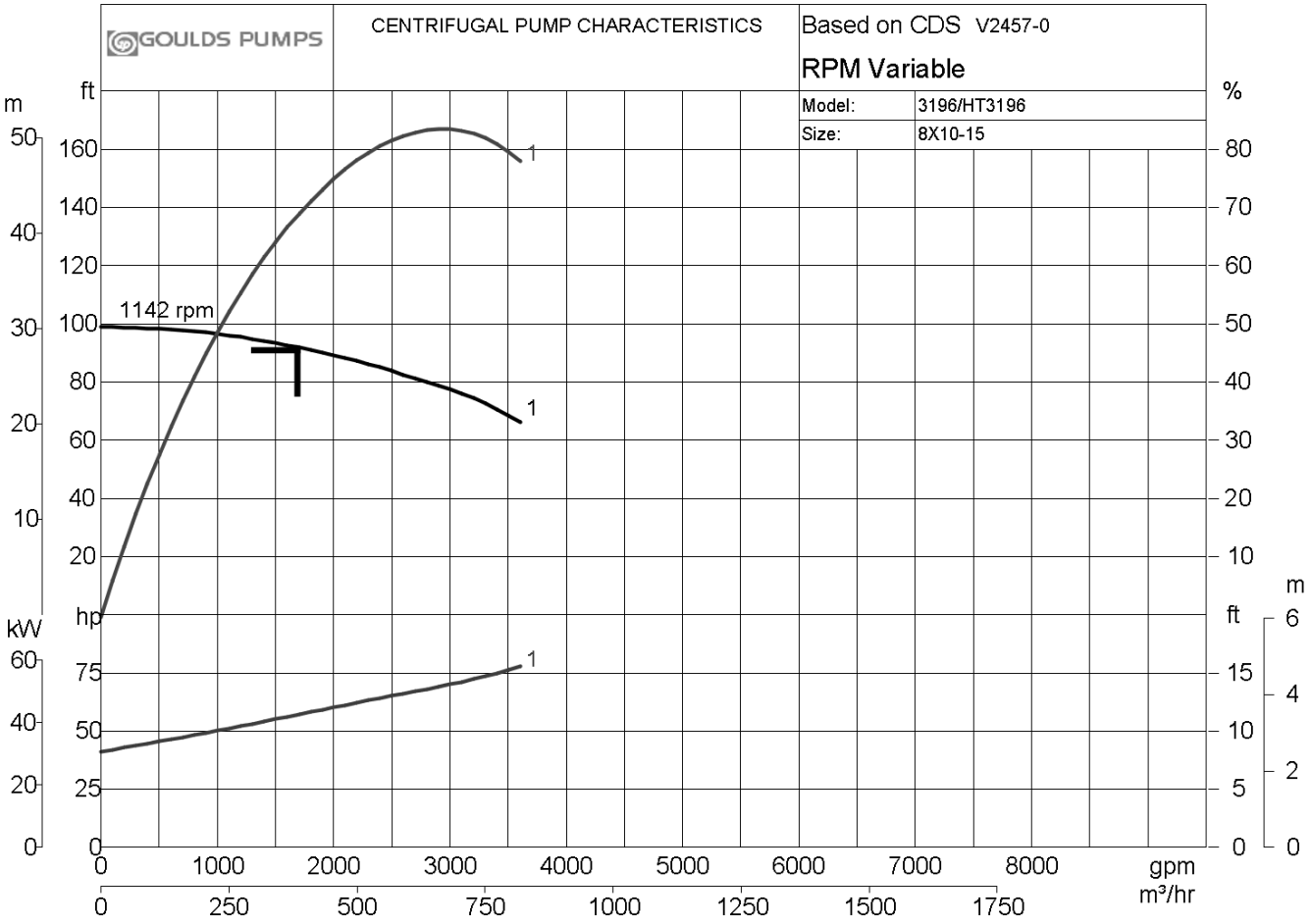

Name	Speed	Flow	Head	NPSH r	Eff %	Power	Shut off head	Min. Hydraulic Flow
Rated Point	1,142	1,715.0 gpm	91.7 ft	0.0 ft	69.0	57.3 hp	99.0 ft	1,079.1 gpm

GOULDS PUMPS

OUTLINE DRAWING

Model 3196 XLTi
Size 8x10-15

ITT

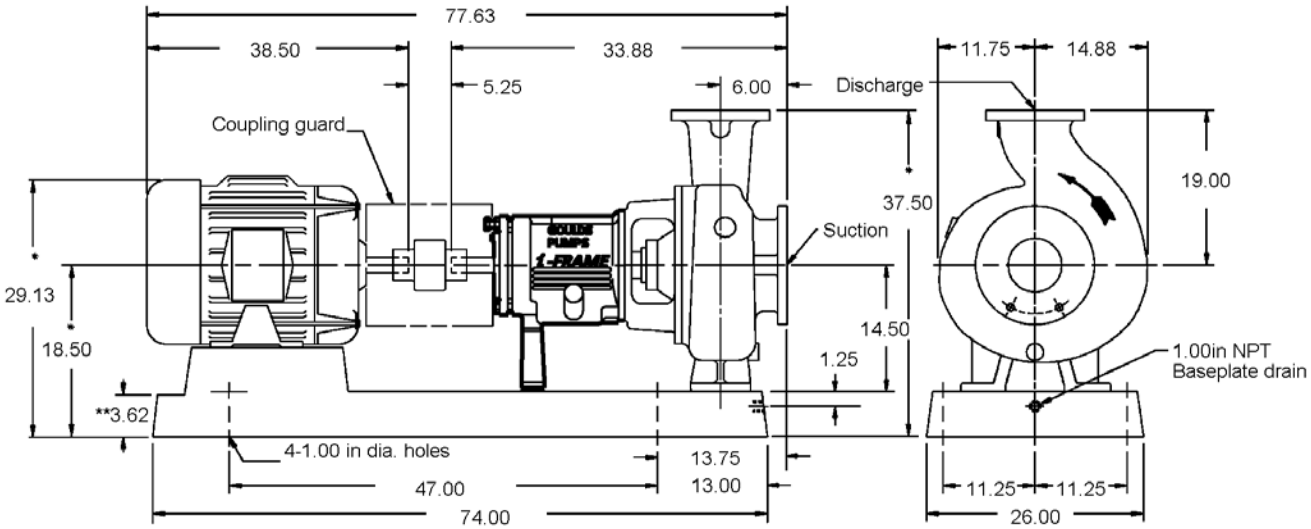

Pump specification

SUCT.FLANGE SIZE	*10"*	DRILLING	*ANSI 150#*	FACING	*FF*	FINISH	*SERRATED*
DISCH.FLANGE SIZE	*8"*	DRILLING	*ANSI 150#*	FACING	*FF*	FINISH	*SERRATED*
PUMP ROTATION (LOOKING AT PUMP FROM MOTOR)				*CW*			
TYPE OF LUBRICATION	*FLOOD OIL*					COOLED	*NO*
TYPE OF STUFFING BOX	*TAPER BORE PLUS WITH VPE*					COOLED	*NO*
TYPE OF SEALING	*MECHANICAL SEAL*						

Weights and Measurements

PUMP/PUMPSMART	*740.0/75.0 lb*
MOTOR/CPLG	*1,160.0/42.0 lb*
BASEPLATE	*435.0 lb*
TOTAL	*2,377.0 lb*
GR.VOLUME w/BOX	*99.8 ft³*
GR.WEIGHT w/BOX	*2,876.0 lb*

Motor specification

MOTOR BY	*DISTRIBUTOR*	MOUNT BY	*DISTRIBUTOR*	MFG.	*BALDOR - RELIANCE*
FRAME	*405T*	POWER	*75.0 hp*	RPM	*1200*
PHASE	*3*	FREQUENCY	*60 HZ*	VOLTS	*230/460*
INSULATION	*F*	S.F.	*1.15*		
ENCLOSURE	*EM4404T 95% EFFY, 88 FLA*				

Notes and References

- MTR DIMENSIONS ARE APPROXIMATE
- INSTALL FOUNDATION BOLTS IN PIPE SLEEVES
- ALLOW FROM 0.75 to 1.50in. FOR GROUTING. SEE INSTRUCTION BOOK FOR DETAILS.

*Tolerance is +0.38 -0

** Foundation bolt grip thickness

Auxiliary specification

COUPLING BY	*PUMP MFG*	CPLG TYPE	*REXNORD OMEGA REX ELASTOMER- ES-40 (STANDARD ORANGE ELEMENT)*
CPL GUARD BY	*PUMP MFG.*	CPLG GUARD MATL	*CARBON STEEL*
BASEPLATE	*CAST IRON CAMBER TOP D00054A*		
MECH.SEAL	*GOULDS SEALPLUS SP1CS (CARBON VS SILICON CARBIDE)*		

FOR PUMP TAPPED OPENINGS REFER TO DWG.:
TJFH10-07-23 03 / ITEM 001

DRAWING IS FOR REFERENCE ONLY.
NOT CERTIFIED FOR CONSTRUCTION UNLESS SIGNED.

Customer: O'Brien & Gere Engineers, Inc.
Serial No:
Customer P.O. No:
Item No: ITEM 001
Project No: SCA WTP
End User: SCA WTP Influent Water
Service: Backwash, Effluent Recycle & Swing

Copyright 2010
ITT Corp

All dimensions are in inches.
Drawing is not to scale
Weights (lbs) are approximate

DRAWING NO JFH10-07-23 03/ITEM 001

PUMPSMART®

PS200 OUTLINE DRAWING

ITT

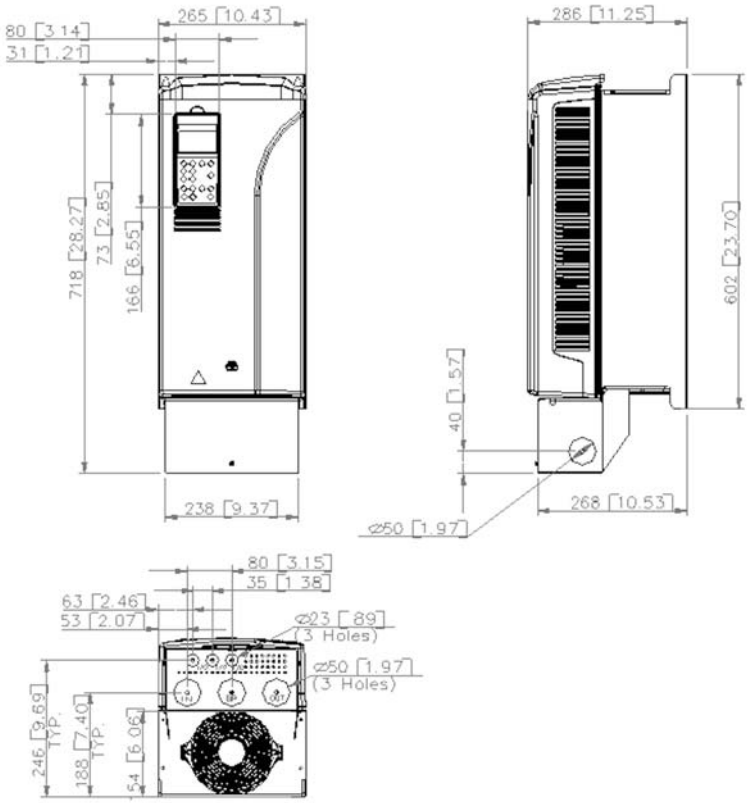

Drive specifications

CONTROLLER PART NO.	*A08100A12*	DRIVE PLATFORM	*ABB ACS800*
LOAD TYPE	*VARIABLE TORQUE*	SUPPLY VOLTAGE	*460 VAC (380-500)*
POWER(1)	*75.0 hp*	SHORT CIRCUIT RATING	*65000 AIC (UL)*
MAXIMUM CURRENT	*96.0A Continuous*	MAX MOTOR CABLE	*0.00 ft*
OVERLOAD	*110% 1 minutes / 5 minutes, 138A maximum for 10s at start up*		
HEAT DISSIPATION		AIR FLOW	
RECOMMENDED FUSE SIZE	*600V 125A Bussmann JJS-125 UL class T*		

Enclosure specifications

FRAME SIZE	*R5*	OPERATING TEMP	*5.0 deg F min. - 104.0 deg F max. (No de-rate required)*
ENCLOSURE	*NEMA 1 - IP21*	ELEVATION	*3,300.0 ft (NO DE-RATE REQUIRED)*
WEIGHT	*75.0 lb*	HUMIDITY	*5-95% NON CONDENSING*
CABLE ENTRY	*Bottom Entry, Bottom Exit*		

Notes and References

1) Power ratings based on NEMA ratings for typical 4-pole motor, check motor current for compatibilty

2) Recommended fuse size is provided, which can be substituted per UL class specifications. Check that the operating time of the fuse is below 0.5 seconds. Fuses must be of the "non-time delay" type.

DRAWING IS FOR REFERENCE ONLY.

NOT CERTIFIED FOR CONSTRUCTION UNLESS SIGNED.

Customer: O'Brien & Gere Engineers, Inc.
Serial No:
Customer P.O. No:
Item No: ITEM 001
Project No: SCA WTP
End User: SCA WTP Influent Water
Service: Backwash, Effluent Recycle & Swing

Copyright 2010
ITT Corp

All dimensions are in : mm (in.).
Drawing is not to scale
Weights (lbs) are approximate

DRAWING NO JFH10-07-23 03/ITEM 001

GOULDS PUMPS **TAPPED OPENINGS** **Model 3196 XLTi**
Size 8x10-15

ITT

TAPPED OPENINGS MODEL 3196 XLTi 8x10-15 ANSI NO. A120

NO.	SIZE	QTY.	PURPOSE	FURNISHED YES/NO	NO.	SIZE	QTY.	PURPOSE	FURNISHED YES/NO
TB	1/2	1	CASING DRAIN	YES	TL1	---	2	FRAME COOLER ACCESS	YES
TC	1/2	1	BY-PASS CONNECTION	NO	TN	1/4	4	GREASE FITTING	NO
TD	3/8	1	DISCH. GAUGE CONNECTION	NO	TN2	1/4	2	OIL MIST INJECTION PORT	NO
TE	3/8	1	SUCTION GAUGE CONNECTION	NO	TY	3/4	1	OIL FILL	YES
TF	1/2	1	BEARING FRAME DRAIN	YES	TS	1	2	SIGHT GLASS/OILER CONN.	YES
TL	1/2	2	FRAME COOLING CONNECTION	NO	TY2	1/2	1	REPELLER CHAMBER DRAIN	NO
					TBL	1/4	2	VIB./TEMP. CONNECTION	YES

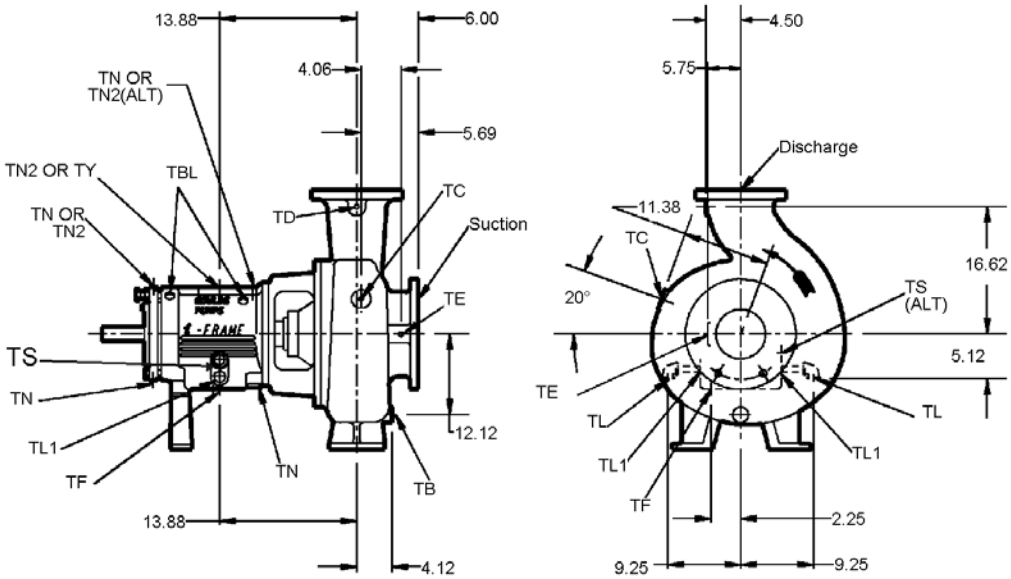

DRAWING IS FOR REFERENCE ONLY.
NOT CERTIFIED FOR CONSTRUCTION UNLESS SIGNED.

Customer: O'Brien & Gere Engineers, Inc.
Serial No:
Customer P.O. No:
Item No: ITEM 001
Project No: SCA WTP
End User: SCA WTP Influent Water
Service: Backwash, Effluent Recycle & Swing

Copyright 2010
ITT Corp

All dimensions are in inches.
Drawing is not to scale

DRAWING NO JFH10-07-23 03/ITEM 001

FORM # ED0289/90 Program Version 1.33.0.1

Effluent Recycle Pump

Model: 3196	Size: 8X10-15	Group: XLTi	60Hz	RPM: 885	Stages: 1

Job/Inq.No. :					
Purchaser :	UNDEFINED				
End User :		Issued by :	Joy Hutchinson	Rev. :	0
Item/Equip.No. :	Effluent Recycle	Quotation No. :	JFH10-09-03 01	Date :	09/03/2010
Service :	Effluent Recycle				
Order No. :					

Operating Conditions

Liquid:	Water
Temp.:	70.0 deg F
S.G./Visc.:	1.000/1.000 cp
Flow:	2,480.0 gpm
TDH:	46.0 ft
NPSHa:	
Solid size:	
% Susp. Solids (by wtg):	
Max. Solids Size:	0.0000 in

Pump Performance

Published Efficiency:	82.0 %	Suction Specific Speed:	9,518 gpm(US) ft
Rated Pump Efficiency:	83.0 %	Min. Hydraulic Flow:	905.0 gpm
Rated Total Power:	34.7 hp	Min. Thermal Flow:	N/A
Non-Overloading Power:	38.0 hp		
Imp. Dia. First 1 Stg(s):	15.0000 in		
NPSHr:	6.4 ft		
Shut off Head:	59.4 ft		
Vapor Press:			

Notes: 1. The Mechanical seal increased drag effect on power and efficiency is not included, unless the correction is shown in the appropriate field above. 2. Magnetic drive eddy current on power and efficiency is not included. 3. Elevated temperature effects on performance are not included. 4. Non Overloading power does not reflect v-belt/gear losses.

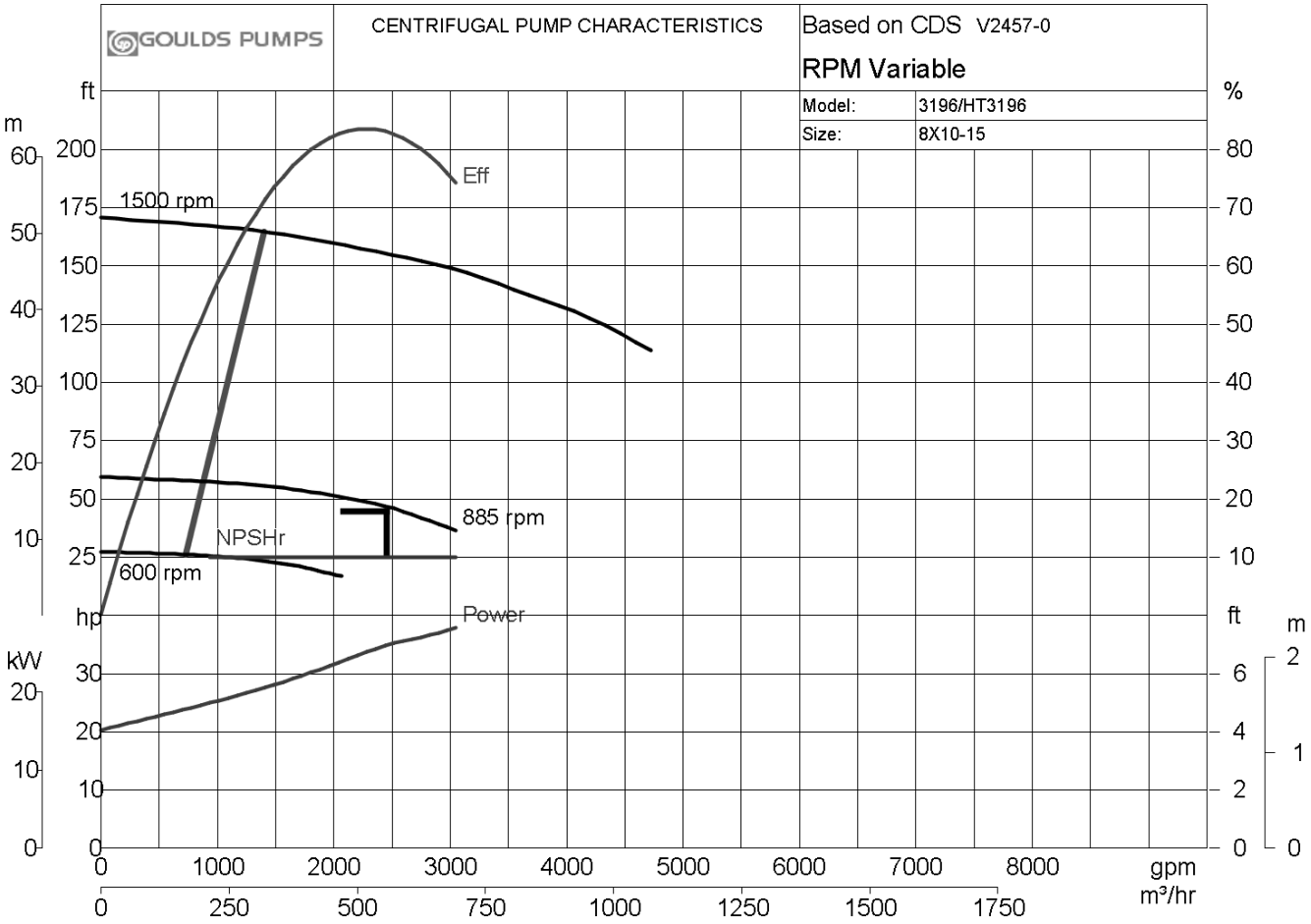

Swing Pump

Model: 3196	Size: 8X10-15	Group: XLTi	60Hz	RPM Variable	Stages: 1

Job/Inq.No. :
Purchaser : UNDEFINED
End User :
Issued by : Joy Hutchinson
Item/Equip.No. : Swing Pump
Quotation No. : JFH10-09-03 01
Date : 09/03/2010
Service : Swing Pump
Order No. :
Rev. : 0

Operating Conditions

Liquid:	Water	Published Efficiency:	82.0 %
Temp.:	70.0 deg F	Rated Pump Efficiency:	83.0 %
S.G./Visc.:	1.000/1.000 cp	Rated Total Power:	34.7 hp
NPSHa:		Non-Overloading Power:	38.0 hp
Vapor Press:		Imp. Dia. First 1 Stg(s):	15.0000 in
Solid size:		Max. Solids Size:	0.0000 in
% Susp. Solids (by wtg):			

Pump Performance @ 885 RPM

Suction Specific Speed:	9,518 gpm(US) ft
Min. Thermal Flow:	N/A

Notes: 1. The Mechanical seal increased drag effect on power and efficiency is not included, unless the correction is shown in the appropriate field above. 2. Magnetic drive eddy current and viscous effect on power and efficiency is not included. 3. Elevated temperature effects on performance are not included. 4. Non Overloading power does not reflect v-belt/gear losses.

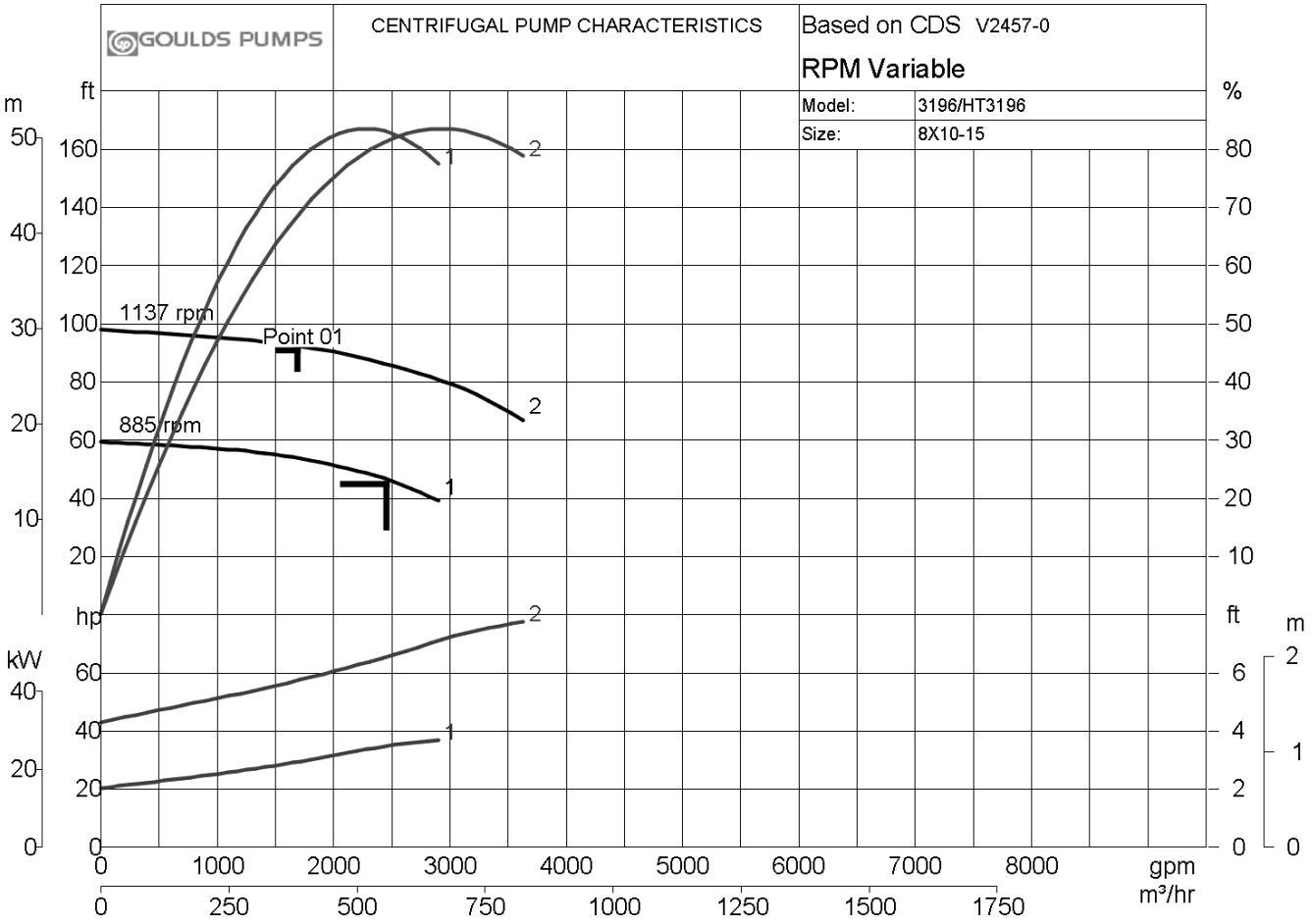

Name	Speed	Flow	Head	NPSH r	Eff %	Power	Shut off head	Min. Hydraulic Flow
Point 01	1,137	1,715.0 gpm	92.3 ft	0.0 ft	69.0	57.7 hp	98.2 ft	1,162.8 gpm
Rated Point	885	2,480.0 gpm	46.4 ft	0.0 ft	82.5	35.0 hp	59.5 ft	905.0 gpm

ITT

Polymer Makedown Water Pump

GOULDS PUMPS

Submittal Data

SSH Close Coupled
End Suction Stainless Steel Pumps

MODEL : 23SH4L52C0

Hydraulic Data					Motor Data	SSH M Group	Qty.
Maximum Flow	Flow at Duty Point	Maximum TDH	TDH at Duty Point	$NPSH_R$	Voltage / Phase / Enclosure	Model	
696 US g.p.m.	600 US g.p.m.	75 ft	32 ft	12 ft	460V 3PH TEFC	23SH4L52C0	1

Submittal Prepared for: _____ Job: _____
Engineer: _____ Contractor: _____
Submittal Prepared by: _____ Company: _____
Submittal Date: 2010-07-26 Approved by: _____ Date: _____

Engineering Data

Pump Code: 23SH4L52C0
Pump Size: 3 x 4 - 8
Pump Max Horsepower: 8.2428 hp
Pump Horsepower at Rating Point: 8.24 hp
Pump Shut Off Head: 75 ft
Motor Speed: 1725 rpm
Max. Temperature: 212 °F
Liquid: Water
Motor Code: C12732
System Input Power: 3~ 460 V
Motor Rated Horsepower: 10.00 hp
Max. Frequency: 60
Electrical Enclosures: TEFC
Motor Standard: NEMA
Suction Flange Standard: ANSI
Suction Flange Rating: Class 150
Suction Size: 4" 316SS
Discharge Flange Standard: ANSI
Discharge Flange Rating: Class 150
Discharge: 3" 316SS
Approximate Net Weight: 139 lb
Impeller Size: $8^{7}/_{16}$"
Impeller Construction: Closed
Impeller Type: Radial impeller
Impeller Material:
316L Stainless Steel
Sense of Rotation: Clockwise from the drive end
Shaft Seal: Carbon/Sil-Carbide/Viton

Standard Equipment / Capability:

Close coupled or frame mounted end suction pump.
All liquid handling components of AISI 316L statinless steel.
Flanged connections to mate with standard ANSI 150 lb raised face flange.
Discharge is top centerline for piping flexibility.
Close coupled version uses standard NEMA JM frame motors.
Frame mounted version uses standard NEMA T frame motors.
Uses standard John Crane Type 21 mechanical seal.
Maximum working pressures to 230 PSI
Maximum temperatures to 250 F
Enclosed impeller with replaceable wear ring for high efficiency and long pump life.

GOULDS PUMPS

Performance Data

SSH Close Coupled
End Suction Stainless Steel Pumps

MODEL : 23SH4L52C0

Hydraulic Data					Motor Data	SSH M Group	Qty.
Maximum Flow	Flow at Duty Point	Maximum TDH	TDH at Duty Point	$NPSH_R$	Voltage / Phase / Enclosure	Model	
696 US g.p.m.	600 US g.p.m.	75 ft	32 ft	12 ft	460V 3PH TEFC	23SH4L52C0	1

Submittal Prepared for: _____ Job: _____
Engineer: _____ Contractor: _____
Submittal Prepared by: _____ Company: _____
Submittal Date: 2010-07-26 Approved by: _____ Date: _____

Fluid: Water Duty Chart: 1750 RPM

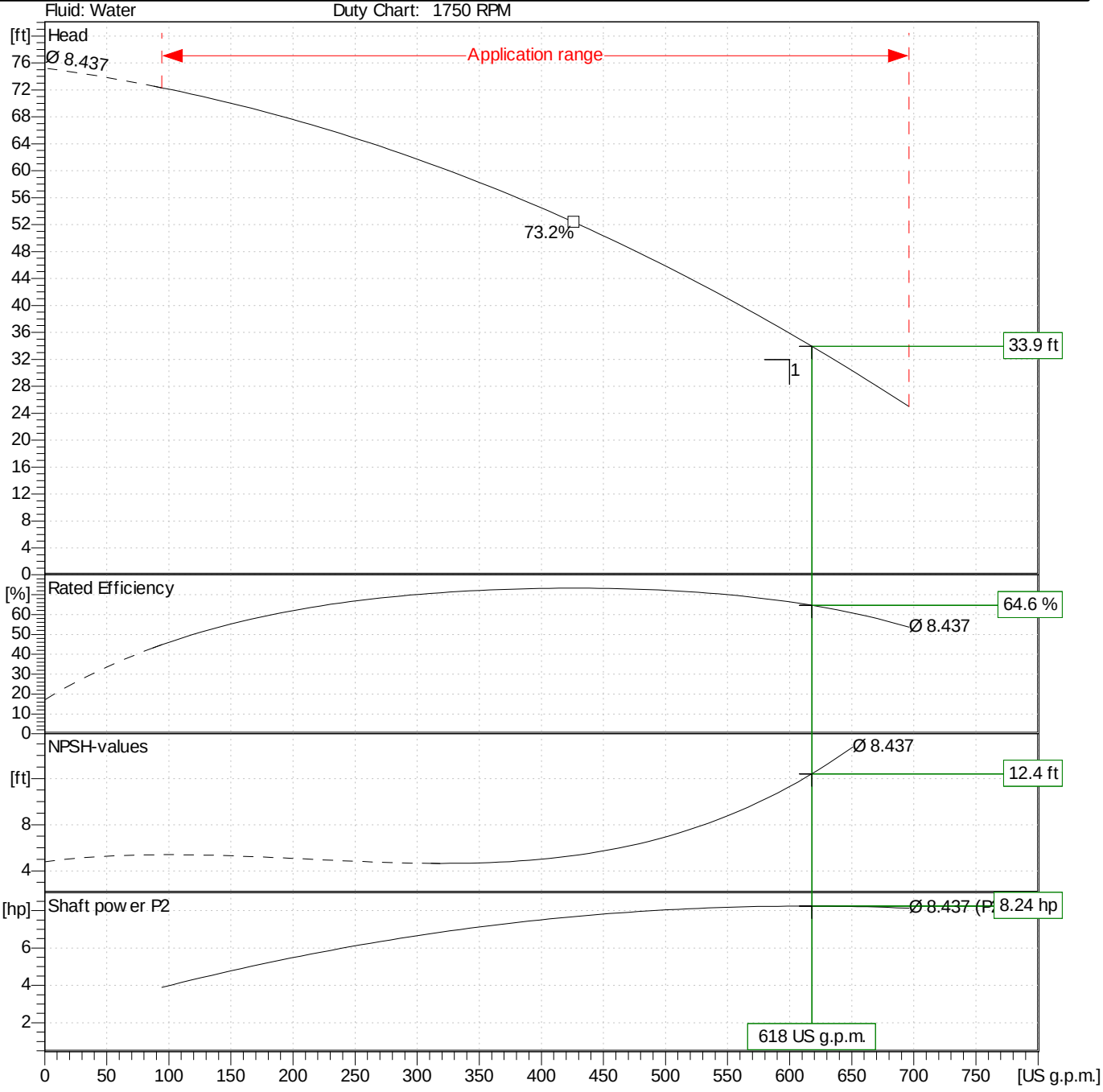

Printed from data file
2010-07-26

GOULDS PUMPS

Unit Dimensions

SSH Close Coupled
End Suction Stainless Steel Pumps

MODEL : 23SH4L52C0

Hydraulic Data					Motor Data	SSH M Group	Qty.
Maximum Flow	Flow at Duty Point	Maximum TDH	TDH at Duty Point	$NPSH_R$	Voltage / Phase / Enclosure	Model	
696 US g.p.m.	600 US g.p.m.	75 ft	32 ft	12 ft	460V 3PH TEFC	23SH4L52C0	1

Submittal Prepared for: _____ Job: _____
Engineer: _____ Contractor: _____
Submittal Prepared by: _____ Company: _____
Submittal Date: 2010-07-26 Approved by: _____ Date: _____

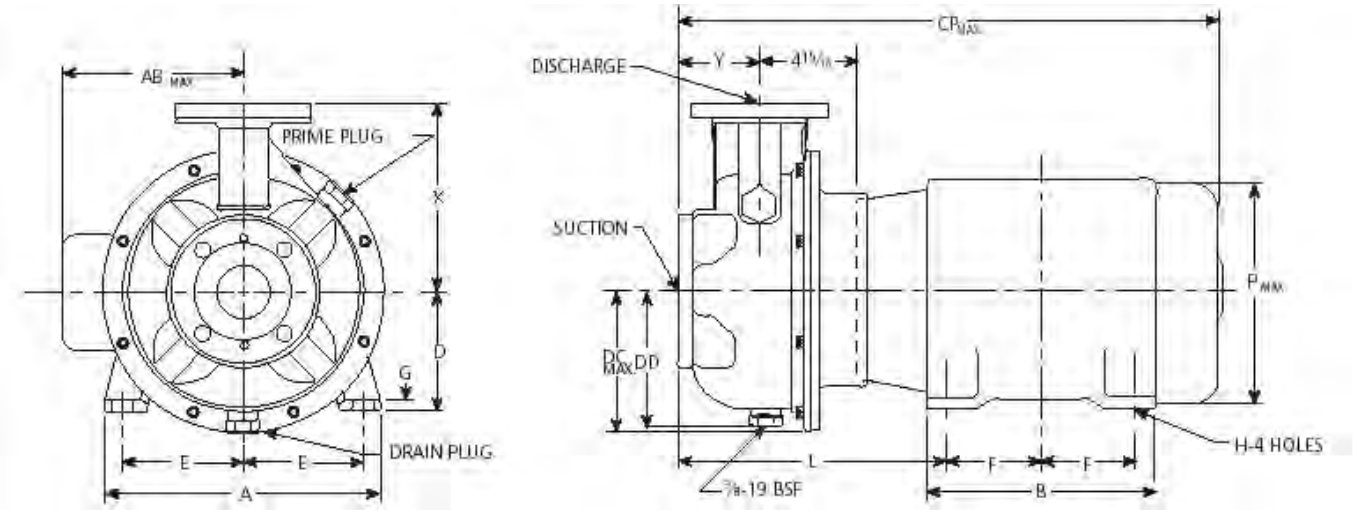

Dimension	Value	Dimension	Value
A	$9^1/_2$	L	$13^3/_8$
AB	$7^3/_8$	P max	$10^3/_{16}$
B	8	X	$9^{15}/_{16}$
CP	24	Y	5
CPMAX	37	Z	$^1/_8$
D	$5^1/_4$		
DC	$6^7/_8$		
DD	$6^5/_8$		
E	$4^1/_4$		
F	$3^1/_2$		
G	$^1/_4$		

Printed from data file
2010-07-26

Filter Feed Pump

MOYNO

Always the Right Solution™

25-Aug-10
Version 9. 0. 1 C

Computer Aided Pump Selection

Moyno Pump Model: 1K800G1CDQ3AAA

File Reference:
Prepared For:
Requested By
Material:

Parameters:

Rate Of Flow:	1,653 GPM	Suction Pressure:	0 PSI
		Discharge Pressure:	96 FT

Fluid Character:

Viscosity:	1 CP	Fluid Type:	Viscous
Specific Gravity:	1	Solids Contents:	0 %
Temperature:	70 F	Max Particle Size:	0 IN
Abrasion Level:	None	Average Particle Size:	0 IN

Performance (Calculated Values):

Diff Pressure:	96 FT	Rate Of Flow:	1,653 GPM
Slip:	179.80 GPM	Pump Speed:	232.08 RPM
Delta Temp:	4.91 F	Operating Torque:	18,251.15 In-Lbs
Internal Vel:	20.91 Ft/S	Starting Torque:	8,084.92 In-Lbs
Shear Rate:	169.8 Inv Secs	Required Power:	67.21 HP
NPSHR	12.98 Ft	Intake Index:	10

Remark Codes: 903

Notes: *Hp req'd for VFD Connection: 67.21

Print Return

Moyno Pump Model: 1K800G1CDQ3AAA

Pump RPM

232.08 RPM

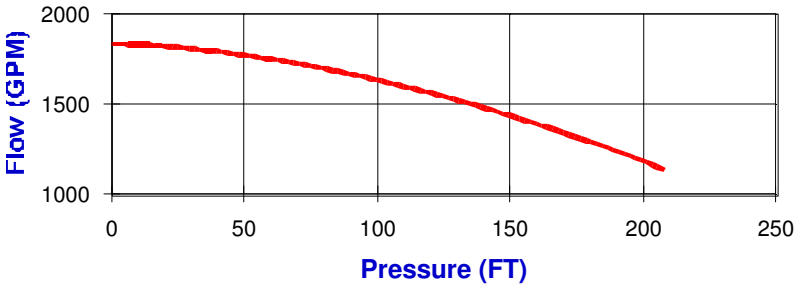

Design Point:
0 PSI Suction
96 FT Discharge
96 FT Diff. Pressure
1,653 GPM
1 CP

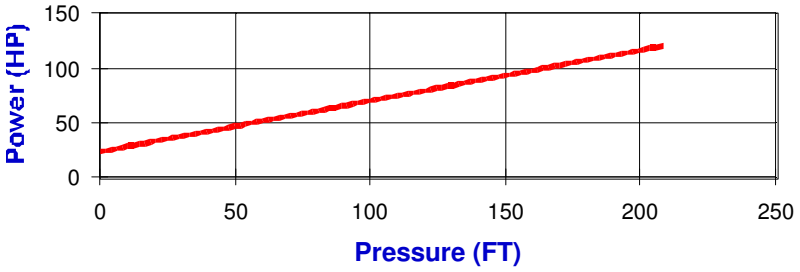

Data Source:
Check Pump (Flow)
Version 9. 0. 1
08-25-2010

Sludge Return Pump

FLYGT	PERFORMANCE CURVE	PRODUCT	TYPE
		NP3315.180	MT

DATE	PROJECT	CURVE NO	ISSUE
2010-08-25	SCA	63-638-00-2130	2

	1/1-LOAD	3/4-LOAD	1/2-LOAD
POWER FACTOR	0.81	0.76	0.65
EFFICIENCY	92.0 %	92.5 %	92.0 %
MOTOR DATA	---	---	---

RATED POWER	110	hp
STARTING CURRENT ...	865	A
RATED CURRENT ...	139	A
RATED SPEED	1185	rpm
TOT.MOM.OF INERTIA ...	2.5	kgm2
NO. OF BLADES	3	

IMPELLER DIAMETER: 385 mm

MOTOR #	STATOR	REV
35-35-6AA	01D	11

FREQ.	PHASES	VOLTAGE	POLES
60 Hz	3	460 V	6

GEARTYPE	RATIO
---	---

COMMENTS

INLET/OUTLET	IMP. THROUGHLET
-/ 10 inch	---

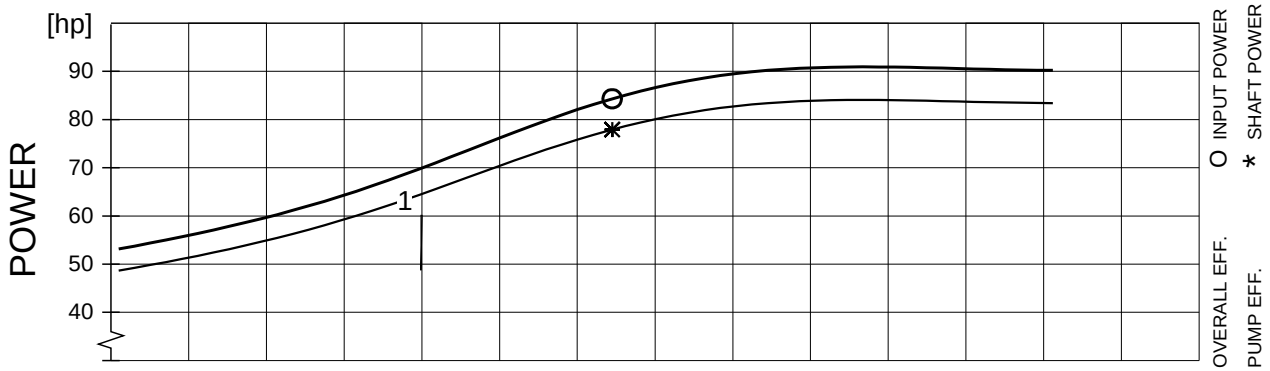

DUTY-POINT	FLOW[USgpm]	HEAD[ft]	POWER [hp]	EFF. [%]	NPSHre[ft]
1	1998	94.9	70.0 (64.7)	68.5 (74.2)	10.9
B.E.P.	3224	78.0	84.3 (78.0)	75.5 (81.6)	13.3

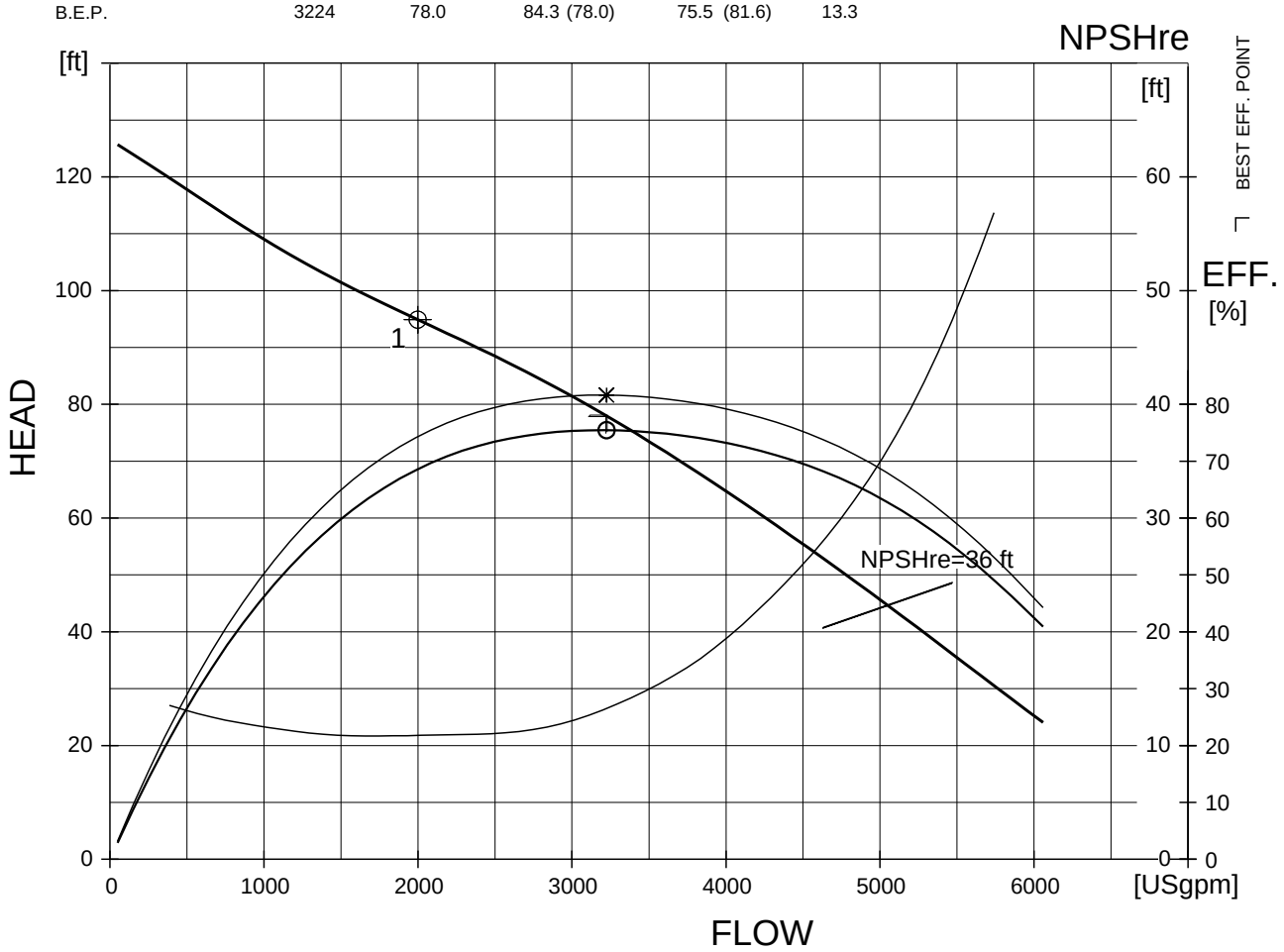

FLYPS3.1.6.6 (20090313)

NPSHre = NPSH3% + min. operational margin

Performance with clear water and ambient temp 40 °C

FLYGT HI B Curve

Duty Analysis - Duty conditions

Project: SCA

Created by:: ITT

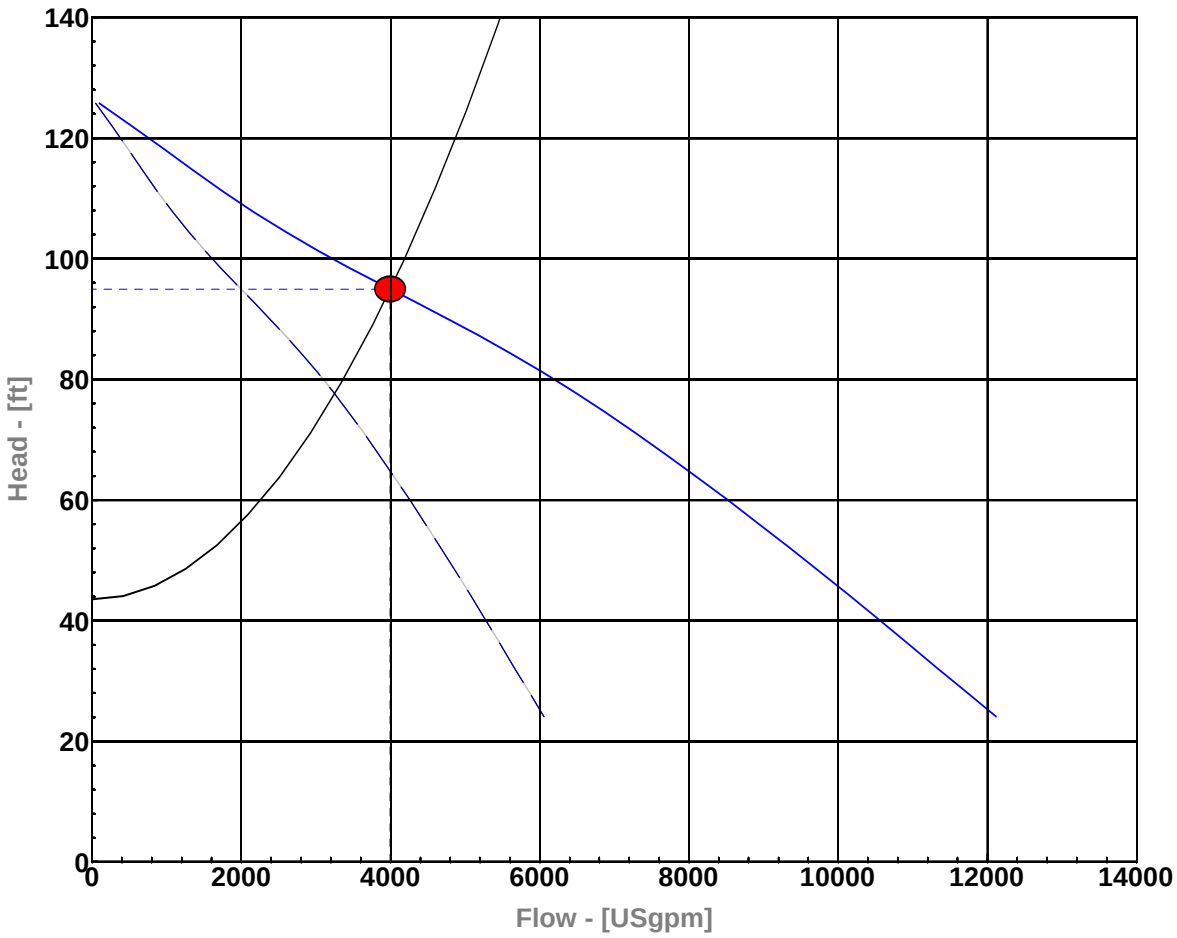

Pump curve

2 NP 3315 63-638-00-2130

PRODUCT DATA

Rtd. pwr.: 110 hp

Imp. diam.: 385 mm

Vanes: 3

Throughlet: 0 inch

DUTY CONDITIONS

No of pumps: 2

Flow: 3996.2 USgpm

Head: 94.9 ft

Shaft power: 129.1 hp

Pump efficiency: 74.2 %

Specifc energy: 434.4 kWh/mg

NPSHre: 10.9 ft

Duty Analysis - Duty conditions

Project: SCA

Created by:: ITT

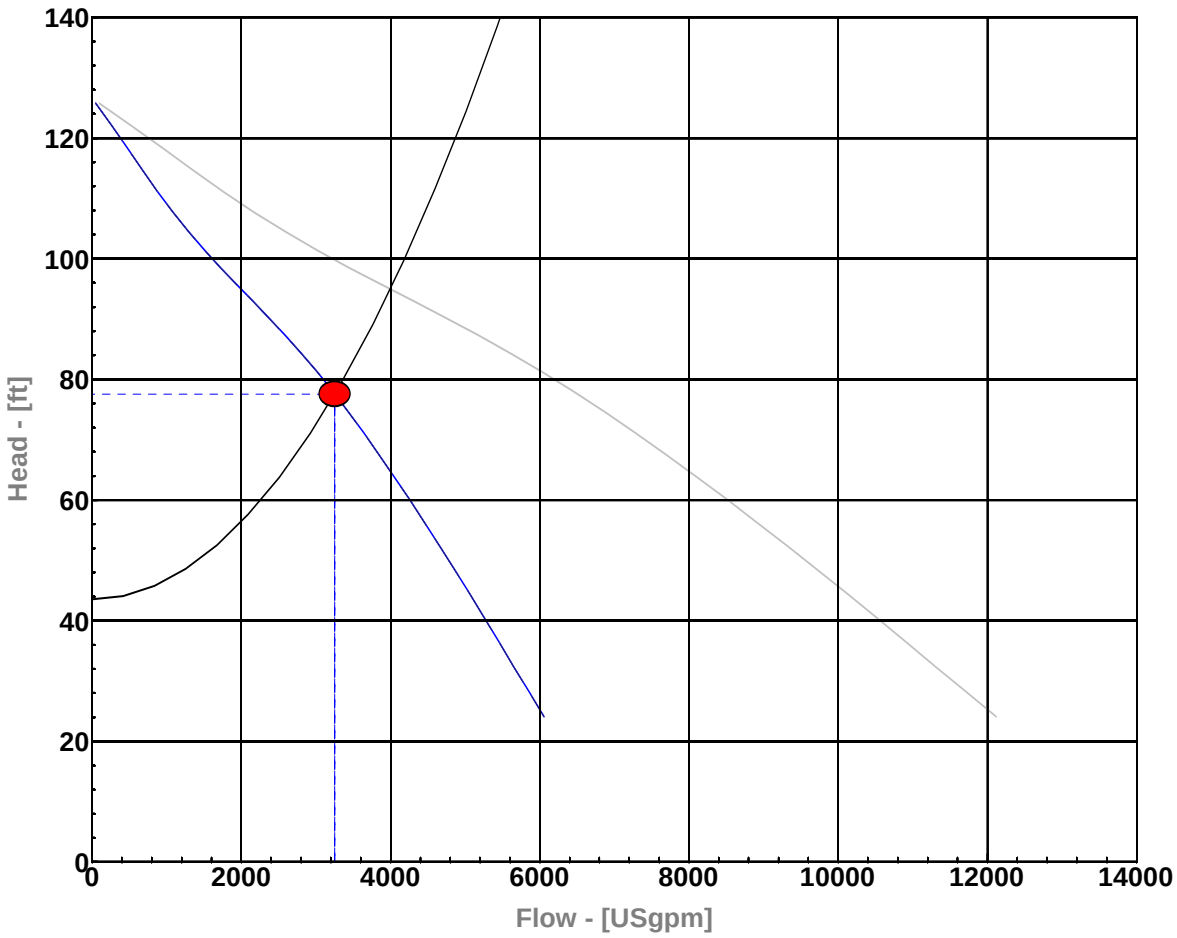

Pump curve

1 NP 3315 63-638-00-2130

PRODUCT DATA

Rtd. pwr.: 110 hp

Imp. diam.: 385 mm

Vanes: 3

Throughlet: 0 inch

DUTY CONDITIONS

No of pumps: 1

Flow: 3251.8 USgpm

Head: 77.5 ft

Shaft power: 78.1 hp

Pump efficiency: 81.6 %

Specifc energy: 322.6 kWh/mg

NPSHre: 13.4 ft

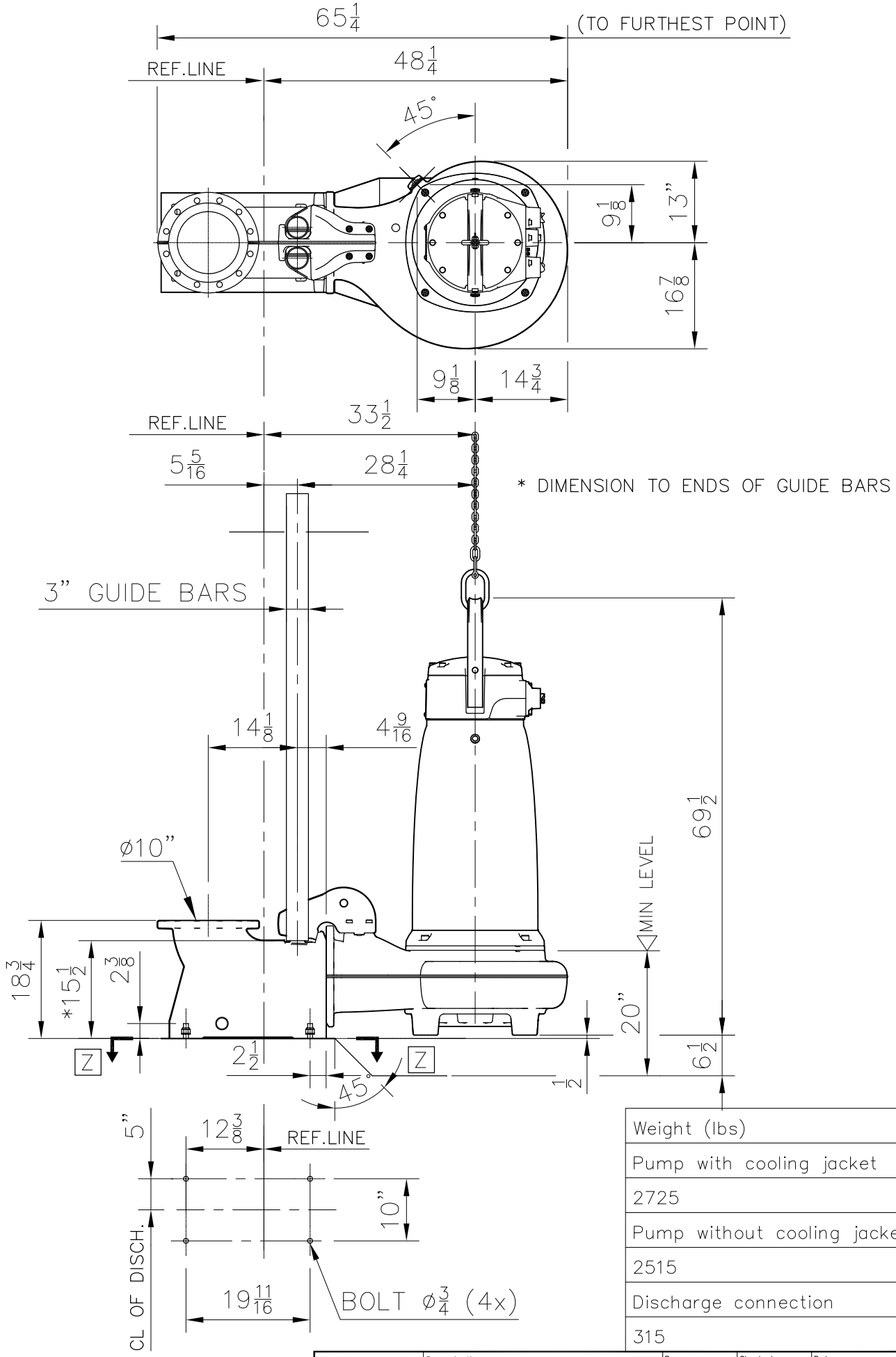

Weight (lbs)
Pump with cooling jacket
2725
Pump without cooling jacket
2515
Discharge connection
315

FLYGT AUTOCAD DRAWING	Denomination: Dimensional drwg NP 3315 MT ø10"/ø10"	Drawn by NK	Checked by SB	Date 091218
		Scale		Reg no 5399
		7364400		1