Summary for Reach CHNL3: Grass Channel

Mannings n per NYSSMDM

Inflow	=	0.17 cfs @	12.21 hrs,	Volume=	0.040 af
Outflow	=	0.16 cfs @	12.28 hrs,	Volume=	0.040 af, Atten= 3%, Lag= 3.8 min

Routing by Sim-Route method, Time Span= 0.00-24.00 hrs, dt= 0.01 hrs
Max. Velocity= 0.20 fps, Min. Travel Time= 6.3 min
Avg. Velocity = 0.09 fps, Avg. Travel Time= 13.9 min

Peak Storage= 63 cf @ 12.28 hrs, Average Depth at Peak Storage= 0.10'
Bank-Full Depth= 0.35', Capacity at Bank-Full= 1.42 cfs

8.00' x 0.35' deep channel, n= 0.150 DEC Miniumum pg 5-9
Side Slope Z-value= 3.0 '/' Top Width= 10.10'
Length= 77.0' Slope= 0.0097 '/'
Inlet Invert= 1,894.50', Outlet Invert= 1,893.75'

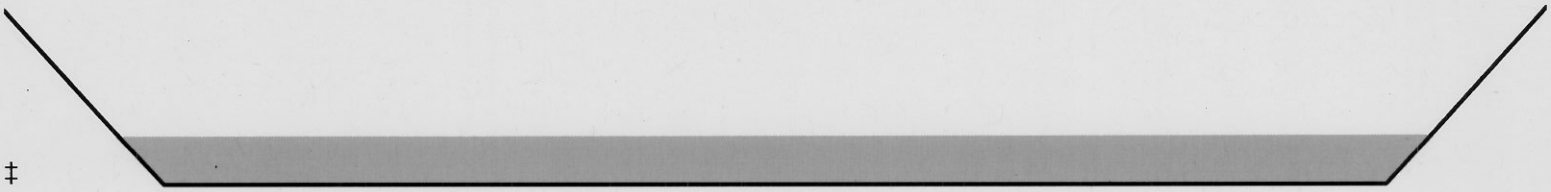

‡

Summary for Pond 2.8A: CB

Inflow Area =		3.702 ac, 12.94% Impervious, Inflow Depth > 3.26" for Q10 event			
Inflow	=	11.88 cfs @	12.18 hrs,	Volume=	1.006 af
Outflow	=	11.88 cfs @	12.19 hrs,	Volume=	1.006 af, Atten= 0%, Lag= 0.6 min
Primary	=	11.88 cfs @	12.19 hrs,	Volume=	1.006 af

Routing by Sim-Route method, Time Span= 0.00-24.00 hrs, dt= 0.01 hrs
Peak Elev= 1,894.45' @ 12.19 hrs
Flood Elev= 2,137.00'

Device	Routing	Invert	Outlet Devices
#1	Primary	1,892.82'	**24.0" x 87.0' long Culvert** CMP, square edge headwall, Ke= 0.500 Outlet Invert= 1,890.65' S= 0.0249 '/' Cc= 0.900 n= 0.020 Corrugated PE, corrugated interior
#2	Primary	1,898.15'	**100.0' long x 30.0' breadth Broad-Crested Rectangular Weir** Head (feet) 0.20 0.40 0.60 0.80 1.00 1.20 1.40 1.60 Coef. (English) 2.68 2.70 2.70 2.64 2.63 2.64 2.64 2.63

Primary OutFlow Max=11.88 cfs @ 12.19 hrs HW=1,894.45' TW=0.00' (Dynamic Tailwater)
└─**1=Culvert** (Inlet Controls 11.88 cfs @ 4.34 fps)
└─**2=Broad-Crested Rectangular Weir** (Controls 0.00 cfs)

Summary for Pond BIORET1: Bioretention Area

0.0056 cfs of treated water

Inflow Area =		0.093 ac, 0.00% Impervious, Inflow Depth > 8.33" for Q10 event			
Inflow	=	0.62 cfs @	11.98 hrs,	Volume=	0.065 af
Outflow	=	0.45 cfs @	12.05 hrs,	Volume=	0.052 af, Atten= 28%, Lag= 4.4 min
Discarded	=	0.00 cfs @	12.05 hrs,	Volume=	0.003 af
Primary	=	0.44 cfs @	12.05 hrs,	Volume=	0.049 af

Routing by Sim-Route method, Time Span= 0.00-24.00 hrs, dt= 0.01 hrs
Peak Elev= 1,893.81' @ 12.05 hrs Surf.Area= 1,373 sf Storage= 623 cf
Flood Elev= 1,895.50' Surf.Area= 3,001 sf Storage= 3,265 cf

Plug-Flow detention time= (not calculated: outflow precedes inflow)

Center-of-Mass det. time= 45.6 min (918.2 - 872.7)

Volume	Invert	Avail.Storage	Storage Description
#1	1,888.25'	3,265 cf	**Custom Stage Data (Prismatic)** Listed below (Recalc) 7,790 cf Overall - 4,525 cf Embedded = 3,265 cf
#2	1,888.25'	0 cf	**Custom Stage Data (Prismatic)** Listed below (Recalc) Inside #1 4,525 cf Overall x 0.0% Voids
		3,265 cf	Total Available Storage

Elevation (feet)	Surf.Area (sq-ft)	Inc.Store (cubic-feet)	Cum.Store (cubic-feet)
1,888.25	905	0	0
1,893.25	905	4,525	4,525
1,893.75	1,274	545	5,070
1,894.00	1,696	371	5,441
1,895.00	3,001	2,349	7,790

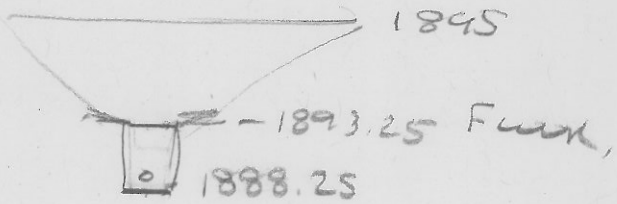

Elevation (feet)	Surf.Area (sq-ft)	Inc.Store (cubic-feet)	Cum.Store (cubic-feet)
1,888.25	905	0	0
1,893.25	905	4,525	4,525

Device	Routing	Invert	Outlet Devices
#1	Primary	1,888.25'	**6.0" x 49.0' long Culvert** CPP, square edge headwall, Ke= 0.500 Outlet Invert= 1,888.00' S= 0.0051 '/' Cc= 0.900 n= 0.013 Corrugated PE, smooth interior
#2	Discarded	1,888.25'	**0.2" Vert. Underdrain to CB** C= 0.600
#3	Device 1	1,893.75'	**36.0" Horiz. Overflow** Limited to weir flow C= 0.600
#4	Device 1	1,893.75'	**Slotted Weir, C= 2.62** Head (feet) 0.00 0.50 Width (feet) 0.08 0.08

1894.75

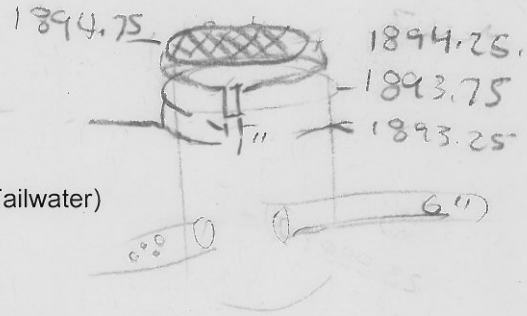

Discarded OutFlow Max=0.00 cfs @ 12.05 hrs HW=1,893.81' (Free Discharge)
└**2=Underdrain to CB** (Orifice Controls 0.00 cfs @ 11.34 fps)

Primary OutFlow Max=0.44 cfs @ 12.05 hrs HW=1,893.81' TW=0.00' (Dynamic Tailwater)
└**1=Culvert** (Passes 0.44 cfs of 1.57 cfs potential flow)
  ├**3=Overflow** (Weir Controls 0.44 cfs @ 0.79 fps)
  └**4=Slotted Weir** (Weir Controls 0.00 cfs @ 0.79 fps)

Summary for Pond BIORET2: Bioretention Area

Q from treatment system to culvert = 0.0066 cfs average over 48 hours.

Inflow Area =	0.425 ac, 57.61% Impervious, Inflow Depth > 4.62" for Q10 event			
Inflow =	3.28 cfs @	11.97 hrs, Volume=	0.163 af	
Outflow =	1.33 cfs @	12.08 hrs, Volume=	0.149 af, Atten= 59%, Lag= 6.5 min	
Discarded =	0.08 cfs @	12.08 hrs, Volume=	0.113 af	
Primary =	1.25 cfs @	12.08 hrs, Volume=	0.036 af	

Routing by Sim-Route method, Time Span= 0.00-24.00 hrs, dt= 0.01 hrs
Peak Elev= 1,897.62' @ 12.08 hrs Surf.Area= 3,895 sf Storage= 2,803 cf
Flood Elev= 1,898.50' Surf.Area= 4,984 sf Storage= 4,499 cf

Plug-Flow detention time= (not calculated: outflow precedes inflow)
Center-of-Mass det. time= 87.0 min (874.4 - 787.4)

Volume	Invert	Avail.Storage	Storage Description
#1	1,891.50'	4,499 cf	**Custom Stage Data (Prismatic)** Listed below (Recalc) 12,634 cf Overall - 8,135 cf Embedded = 4,499 cf
#2	1,891.50'	0 cf	**4' Soil Media (Prismatic)** Listed below (Recalc) Inside #1 8,135 cf Overall x 0.0% Voids
		4,499 cf	Total Available Storage

Elevation (feet)	Surf.Area (sq-ft)	Inc.Store (cubic-feet)	Cum.Store (cubic-feet)
1[illegible].50	1,627	0	0
1,896.50	1,627	8,135	8,135
1,897.00	2,134	940	9,075
1,898.00	4,984	3,559	12,634

Elevation (feet)	Surf.Area (sq-ft)	Inc.Store (cubic-feet)	Cum.Store (cubic-feet)
1,891.50	1,627	0	0
1,896.50	1,627	8,135	8,135

Device	Routing	Invert	Outlet Devices
#1	Primary	1,891.50'	**12.0" x 26.0' long Culvert** CPP, square edge headwall, Ke= 0.500 Outlet Invert= 1,891.00' S= 0.0192 '/' Cc= 0.900 n= 0.013 Corrugated PE, smooth interior
#2	Device 1	1,897.50'	**36.0" Horiz. Overflow** Limited to weir flow C= 0.600
#3	Discarded	1,891.50'	**0.8" Vert. Underdrain Collectors X 2.00** C= 0.600
#4	Device 1	1,897.00'	**Slotted weir X 0.00, C= 2.62** Head (feet) 0.00 0.50 Width (feet) 0.08 0.08

Discarded OutFlow Max=0.08 cfs @ 12.08 hrs HW=1,897.62' (Free Discharge)
└─**3=Underdrain Collectors** (Orifice Controls 0.08 cfs @ 11.88 fps)

Primary OutFlow Max=1.25 cfs @ 12.08 hrs HW=1,897.62' TW=0.00' (Dynamic Tailwater)
└─**1=Culvert** (Passes 1.25 cfs of 8.96 cfs potential flow)
  ├─**2=Overflow** (Weir Controls 1.25 cfs @ 1.12 fps)
  └─**4=Slotted weir** (Controls 0.00 cfs)

Summary for Pond CBB1: CB

Inflow Area = 0.902 ac, 15.81% Impervious, Inflow Depth > 3.36" for Q10 event
Inflow = 2.90 cfs @ 12.19 hrs, Volume= 0.252 af
Outflow = 2.90 cfs @ 12.20 hrs, Volume= 0.252 af, Atten= 0%, Lag= 0.6 min
Primary = 2.90 cfs @ 12.20 hrs, Volume= 0.252 af

Routing by Sim-Route method, Time Span= 0.00-24.00 hrs, dt= 0.01 hrs
Peak Elev= 1,896.23' @ 12.22 hrs
Flood Elev= 1,900.00'

Device	Routing	Invert	Outlet Devices
#1	Primary	1,895.00'	**12.0" x 65.0' long Culvert from CB** CPP, square edge headwall, Ke= 0.500 Outlet Invert= 1,894.51' S= 0.0075 '/' Cc= 0.900 n= 0.013 Corrugated PE, smooth interior

Primary OutFlow Max=2.89 cfs @ 12.20 hrs HW=1,896.23' TW=1,895.52' (Dynamic Tailwater)
└─**1=Culvert from CB** (Outlet Controls 2.89 cfs @ 3.82 fps)

Summary for Pond CBB3: CBB3

Inflow Area = 0.081 ac, 31.00% Impervious, Inflow Depth > 3.88" for Q10 event
Inflow = 0.54 cfs @ 11.97 hrs, Volume= 0.026 af
Outflow = 0.54 cfs @ 11.98 hrs, Volume= 0.026 af, Atten= 0%, Lag= 0.6 min
Primary = 0.54 cfs @ 11.98 hrs, Volume= 0.026 af

Routing by Sim-Route method, Time Span= 0.00-24.00 hrs, dt= 0.01 hrs
Peak Elev= 1,894.37' @ 11.98 hrs
Fl[illegible]Elev= 1,899.00'

Device	Routing	Invert	Outlet Devices
#1	Primary	1,894.00'	**12.0" x 65.0' long Culvert** CPP, square edge headwall, Ke= 0.500 Outlet Invert= 1,892.00' S= 0.0308 '/' Cc= 0.900 n= 0.013 Corrugated PE, smooth interior

Primary OutFlow Max=0.54 cfs @ 11.98 hrs HW=1,894.37' TW=0.00' (Dynamic Tailwater)
└─ **Culvert** (Inlet Controls 0.54 cfs @ 2.07 fps)

Summary for Pond DV3: Diversion

Divert 0.17 cfs to Biotreatment Filter during Q10 event

Inflow Area = 0.902 ac, 15.81% Impervious, Inflow Depth > 3.36" for Q10 event
Inflow = 2.90 cfs @ 12.20 hrs, Volume= 0.252 af
Outflow = 2.90 cfs @ 12.21 hrs, Volume= 0.252 af, Atten= 0%, Lag= 0.6 min
Primary = 2.73 cfs @ 12.21 hrs, Volume= 0.212 af
Secondary = 0.17 cfs @ 12.21 hrs, Volume= 0.040 af

Routing by Sim-Route method, Time Span= 0.00-24.00 hrs, dt= 0.01 hrs
Peak Elev= 1,895.52' @ 12.21 hrs
Flood Elev= 1,898.50'

Device	Routing	Invert	Outlet Devices
#1	Secondary	1,894.50'	**12.0" x 14.0' long Culvert** CPP, square edge headwall, Ke= 0.500 Outlet Invert= 1,894.50' S= 0.0000 '/' Cc= 0.900 n= 0.013 Corrugated PE, smooth interior
#2	Device 1	1,894.50'	**2.6" Vert. Orifice/Grate** C= 0.600
#3	Primary	1,894.50'	**12.0" x 66.0' long Culvert** CPP, square edge headwall, Ke= 0.500 Outlet Invert= 1,890.00' S= 0.0682 '/' Cc= 0.900 n= 0.013 Corrugated PE, smooth interior
#4	Device 3	1,894.50'	**3.0' long Sharp-Crested Rectangular Weir** 2 End Contraction(s) 0.5' Crest Height

Primary OutFlow Max=2.73 cfs @ 12.21 hrs HW=1,895.52' TW=0.00' (Dynamic Tailwater)
└─ **3=Culvert** (Inlet Controls 2.73 cfs @ 3.47 fps)
└─ **4=Sharp-Crested Rectangular Weir** (Passes 2.73 cfs of 11.76 cfs potential flow)

Secondary OutFlow Max=0.17 cfs @ 12.21 hrs HW=1,895.52' TW=1,894.60' (Dynamic Tailwater)
└─ **1=Culvert** (Passes 0.17 cfs of 1.92 cfs potential flow)
└─ **2=Orifice/Grate** (Orifice Controls 0.17 cfs @ 4.60 fps)

Summary for Link 2.8.1: Totalizer

Inflow Area = 3.783 ac, 13.32% Impervious, Inflow Depth > 3.27" for Q10 event
Inflow = 11.97 cfs @ 12.19 hrs, Volume= 1.032 af
Primary = 11.97 cfs @ 12.20 hrs, Volume= 1.032 af, Atten= 0%, Lag= 0.6 min

Primary outflow = Inflow, Time Span= 0.00-24.00 hrs, dt= 0.01 hrs

Summary for Link 2.8.2: Totalizer

Inflow Area = 0.425 ac, 57.61% Impervious, Inflow Depth = 1.02" for Q10 event
Inflow = 1.25 cfs @ 12.08 hrs, Volume= 0.036 af
Primary = 1.25 cfs @ 12.09 hrs, Volume= 0.036 af, Atten= 0%, Lag= 0.6 min

Primary outflow = Inflow, Time Span= 0.00-24.00 hrs, dt= 0.01 hrs

Summary for Link 2.8.3: Totalizer

Inflow Area = 0.995 ac, 14.33% Impervious, Inflow Depth > 3.14" for Q10 event
Inflow = 2.97 cfs @ 12.21 hrs, Volume= 0.261 af
Primary = 2.97 cfs @ 12.22 hrs, Volume= 0.261 af, Atten= 0%, Lag= 0.6 min

Primary outflow = Inflow, Time Span= 0.00-24.00 hrs, dt= 0.01 hrs

Summary for Link PLOT LIMIT:

Primary = 0.00 cfs @ 0.00 hrs, Volume= 0.000 af

Primary outflow = Inflow, Time Span= 0.00-24.00 hrs, dt= 0.01 hrs

Summary for Link PLOT LIMIT2:

Primary = 0.00 cfs @ 0.00 hrs, Volume= 0.000 af

Primary outflow = Inflow, Time Span= 0.00-24.00 hrs, dt= 0.01 hrs

WEIR OVER SERVICE DRIVE

EL	ΔH	LEFT OF LP	RT OF LP	W TTL
1908.73	+1.95'	111'	83.5'	194.5'
1908.23	+1.45'	86'	32.1'	118'
1907.15	+0.37'	31'	37'	68'
1907.03	+0.25'	25'	25'	50'
1906.78' = 0		0	0	0

DDP4

EL	A (SF)
1910	
1905	5464
	4376
	3349
	2419 - 2884 SF

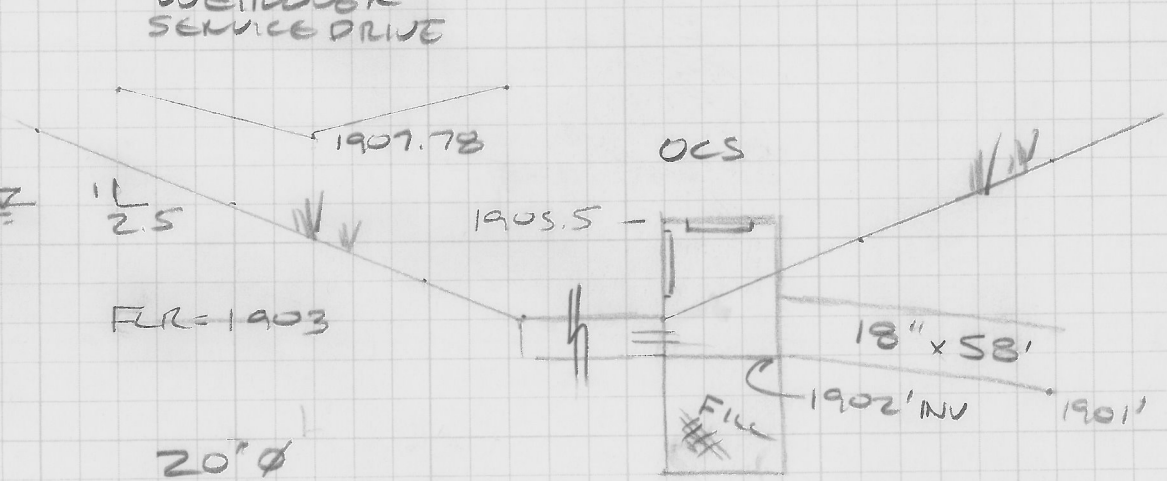

1900

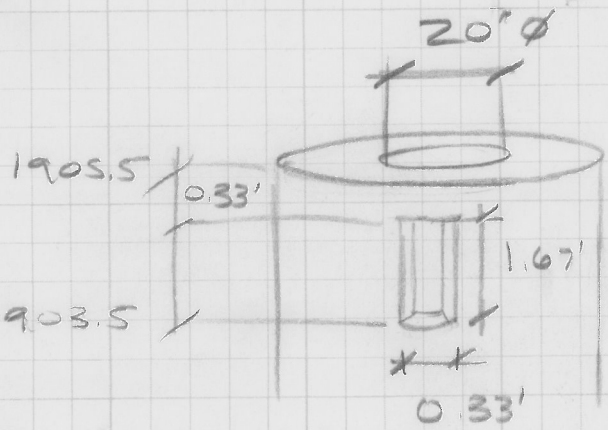

GRATES NOT SHOWN

OCS

6" Ø ⓪ _ INV = 1902.25

└ SEE MODEL RE VERTICAL ORIFICE

JOB NUMBER	FILE NUMBER	SHEET NUMBER	CHECKED BY	DATE
EAST PARKING				
			COMPUTED BY RJP	DATE 12.24.09

37-00-1 (7/05)

NEW YORK STATE DEPARTMENT OF ENVIRONMENTAL CONSERVATION

PROJECT GRID

EAST LOT DDP4