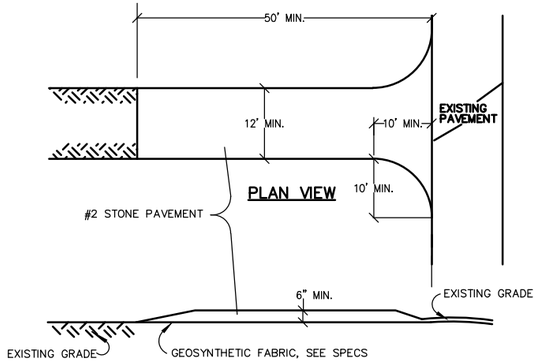

NOTES:

1. STONE SIZE – USE 1"TO 4" STONE.
2. LENGTH – NOT LESS THAN 50 FEET
3. THICKNESS – NOT LESS THAN 6 INCHES
4. WIDTH – TWELVE (12) FOOT MINIMUM, BUT NOT LESS THAN THE FULL WIDTH AT POINTS WHERE INGRESS OR EGRESS OCCURS. TWENTY-FOUR (24) FOOT IF SINGLE ENTRANCE TO SITE
5. FABRIC – WILL BE PLACED OVER THE ENTIRE AREA PRIOR TO PLACING OF STONE.
6. SURFACE WATER – ALL SURFACE WATER FLOWING OR DIVERTED TOWARD CONSTRUCTION ENTRANCE SHALL BE PIPED ACROSS THE ENTRANCE. IF PIPING IS IMPRACTICAL, A MOUNTABLE BERM WITH 5:1 SLOPES WILL BE PERMITTED.
7. MAINTENANCE – THE ENTRANCE SHALL BE MAINTAINED IN A CONDITION WHICH WILL PREVENT TRACKING OR FOLLOWING OF SEDIMENT ONTO PUBLIC RIGHTS-OF-WAY. ALL SEDIMENT SPILLED, DROPPED, WASHED OR TRACTED ONTO PUBLIC RIGHTS-OF-WAY MUST BE REMOVED IMMEDIATELY.
8. WHEN WASHING IS REQUIRED, IT SHALL BE DONE ON AN AREA STABILIZED WITH STONE AND WHICH DRAINS INTO AN APPROVED SEDIMENT TRAPPING DEVICE.
9. PERIODIC INSPECTION AND NEEDED MAINTENANCE SHALL BE PROVIDED AFTER EACH RAIN.

STABILIZED CONSTRUCTION ENTRANCE AND ACCESS ROAD DETAIL

SCALE: N.T.S.

1 / SM16

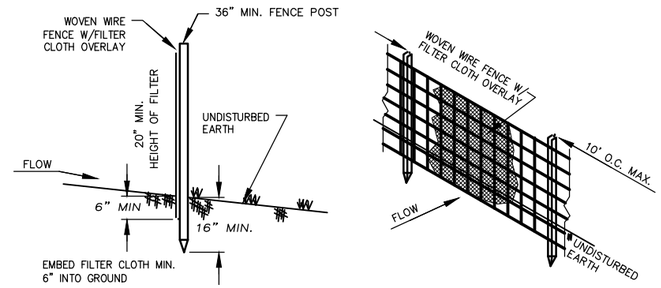

NOTES:

1. WOVEN WIRE FENCE TO BE FASTENED SECURELY TO FENCE POSTS WITH WIRE TIES OR STAPLES. POSTS SHALL BE STEEL EITHER "T" OR "U" TYPE OR HARDWOOD.
2. FILTER CLOTH TO BE FASTENED SECURELY TO WOVEN WIRE FENCE WITH TIES SPACED EVERY 24" AT TOP AND MID SECTION. FENCE SHALL BE WOVEN WIRE, 6" MAXIMUM MESH OPENING.
3. WHEN TWO SECTION OF FILTER CLOTH ADJOIN EACH OTHER THEY SHALL BE OVERLAPPED BY SIX (6) INCHES AND FOLDED. FILTER CLOTH SHALL BE EITHER FILTER X, MIRAFI 100X, STABILINKA T140N, OR APPROVED EQUAL.
4. PREFABRICATED UNITS SHALL BE GEOFAB, ENVIROFENCE, OR APPROVED EQUAL.
5. MAINTENANCE SHALL BE PERFORMED AS NEEDED AND MATERIAL REMOVED WHEN "BULGES" DEVELOP IN THE SILT FENCE.

SILT FENCE DETAIL

SCALE: N.T.S.

2 / SM16

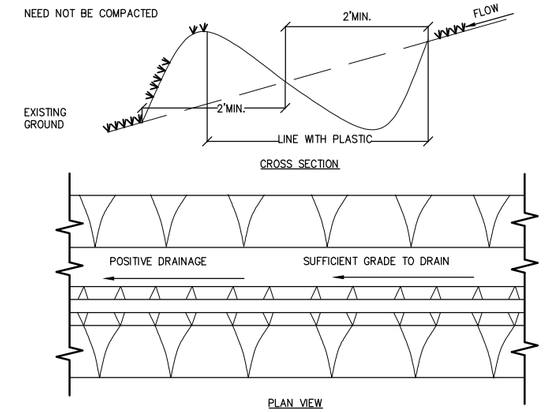

NOTES:

1. ALL PERIMETER DIKES/SWALES SHALL HAVE UNINTERRUPTED POSITIVE GRADE TO AN OUTLET.
2. DIVERTED RUNOFF FROM A DISTURBED AREA SHALL BE CONVEYED TO A SEDIMENT TRAPPING DEVICE.
3. DIVERTED RUNOFF FROM AN UNDISTURBED AREA SHALL OUTLET INTO AN UNDISTURBED STABILIZED AREA AT NON-EROSION VELOCITY.
4. THE SWALE SHALL BE EXCAVATED OR SHAPED TO LINE GRADE, AND CROSS SECTION AS SHOWN.
5. STABILIZATION OF THE AREA DISTURBED BY THE DIKE AND SWALE SHALL BE DONE WITH ANNUAL RYEGRASS AT 30 LBS/ACRE (OR 1LB/1000SF). MULCH THE AREA WITH STRAW AT 2 TONS/ACRE (APPROX. 90 LBS./1000 SQ. FT. OR 2 BALES). THE SWALE INTERIOR SHALL BE LINED WITH PLASTIC AS SHOWN. TEMPORARY SEEDING AND MULCHING SHALL BE DONE IMMEDIATELY AFTER CONSTRUCTING THE BERM.
6. PERIODIC INSPECTION AND REQUIRED MAINTENANCE MUST BE PROVIDED AFTER EACH RAIN EVENT AND/OR EVERY SEVEN CALENDAR DAYS.

PERIMETER DIKE DETAIL

SCALE: N.T.S.

3 / SM16

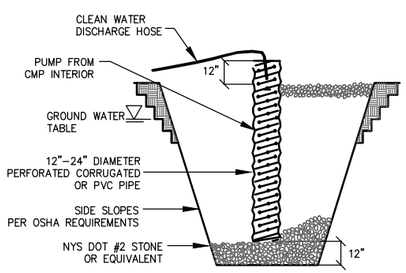

NOTES:

1. PIT DIMENSIONS MAY VARY BASED ON OBSERVED FLOW.
2. THE STANDPIPE SHALL BE CONSTRUCTED BY PERFORATING A 12–24" DIAMETER CORRUGATED OR PVC PIPE.
3. A BASE OF 2" AGGREGATE SHALL BE PLACED IN THE PIT TO A DEPTH OF 12". AFTER INSTALLING THE STANDPIPE, THE PIT SURROUNDING THE STANDPIPE SHALL BE BACKFILLED WITH 2" AGGREGATE.
4. THE STANDPIPE SHALL EXTEND 12–18" ABOVE THE LIP OF THE PIT.
5. THE STANDPIPE SHALL BE WRAPPED WITH AN APPROVED FILTER FABRIC BEFORE INSTALLATION.

DEWATERING SUMP DETAIL

SCALE: N.T.S.

4 / SM16

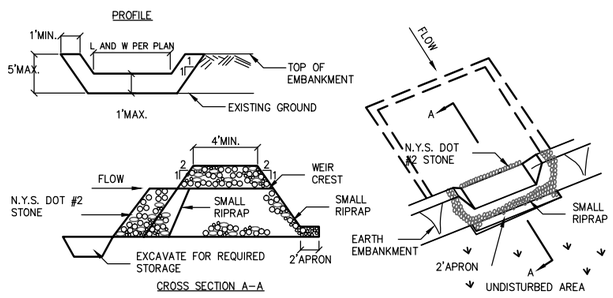

A ONE FOOT LAYER OF N.Y.S. DOT #2 STONE SHALL BE PLACED ON THE UPSTREAM SIDE OF THE RIPRAP INPLACE OF THE EMBEDDED FILTER CLOTH.

NOTES:

1. AREA UNDER EMBANKMENT SHALL BE CLEARED, GRUBBED AND STRIPPED OF ANY VEGETATION AND ROOT MAT. THE POOL AREA SHALL BE CLEARED.
2. THE FILL MATERIAL FOR THE EMBANKMENT SHALL BE FREE OF ROOTS AND OTHER WOODY VEGETATION AS WELL AS OVER-SIZED STONES, ROCKS, ORGANIC MATERIAL OR OTHER OBJECTIONABLE MATERIAL. THE EMBANKMENT SHALL BE COMPACTED BY TRAVERSING WITH EQUIPMENT WHILE IT IS BEING CONSTRUCTED.
3. ALL CUT AND FILL SLOPES SHALL BE 2:1 OR FLATTER.
4. THE STONE USED IN THE OUTLET SHALL BE SMALL RIPRAP 4"–8" ALONG WITH A 1' THICKNESS OF #2 STONE AGGREGATE PLACED ON THE UP-GRADE SIDE ON THE SMALL RIPRAP OR EMBEDDED FILTER CLOTH IN THE RIPRAP.
5. SEDIMENT SHALL BE REMOVED AND TRAP RESTORED TO ITS ORIGINAL DIMENSIONS WHEN THE SEDIMENT HAS ACCUMULATED TO 1/2 THE DESIGN DEPTH OF THE TRAP.
6. THE STRUCTURE SHALL BE INSPECTED AFTER EACH RAIN AND REPAIRS MADE AS NEEDED.
7. CONSTRUCTION OPERATIONS SHALL BE CARRIED OUT IN SUCH A MANNER THAT EROSION AND WATER POLLUTION IS MINIMIZED.
8. THE STRUCTURE SHALL BE REMOVED AND THE AREA STABILIZED WHEN THE DRAINAGE AREA HAS BEEN PROPERLY STABILIZED. MAXIMUM DRAINAGE AREA 5 ACRES

STONE OUTLET SEDIMENT TRAP DETAIL

SCALE: N.T.S.

5 / SM16

SEDIMENT AND EROSION CONTROL NOTES

1) PRIOR TO THE COMMENCEMENT OF CONSTRUCTION ACTIVITY, THE CONTRACTOR SHALL IDENTIFY AT LEAST ONE TRAINED INDIVIDUAL FROM THEIR COMPANY THAT WILL BE RESPONSIBLE FOR IMPLEMENTATION OF THE SWPPP. THE CONTRACTOR SHALL ENSURE THAT AT LEAST ONE TRAINED INDIVIDUAL IS ON SITE ON A DAILY BASIS WHEN SOIL DISTURBANCE ACTIVITIES ARE BEING PERFORMED.

2) INSTALL ALL SOIL EROSION CONTROLS SHOWN ON THE SITE PLAN BEFORE STARTING ANY EARTHWORK OPERATIONS ON SITE.

2) COMPLY WITH REGULATIONS OF ALL PUBLIC AGENCIES HAVING JURISDICTION OVER SOIL EROSION AND STORM WATER CONTROL ON THE SITE.

3) ALL CONSTRUCTION LIMITS AND VEGETATED AREAS TO BE PROTECTED SHALL BE CLEARLY MARKED SO AS TO EXCLUDE ALL EQUIPMENT TRAFFIC.

4) LIMIT ACCESS ON UNSTABILIZED SOIL SURFACES TO THOSE VEHICLES NECESSARY FOR THE WORK. DO NOT PARK EMPLOYEES VEHICLES ON ERODIBLE SOIL SURFACES.

5) TEMPORARY SEED SHALL CONSIST OF ANNUAL RYEGRASS APPLIED AT A RATE OF 2LBS. PER 1000S.F. PERMANENT SEED SHALL BE APPLIED PER THE CONTRACT SPECIFICATIONS. IN AREAS WHERE SOIL DISTURBANCE ACTIVITY HAS APPLICATION TEMPORARILY OR PERMANENTLY CEASED, THE RESPECTIVE STABILIZATION MEASURE SHALL BE IMPLEMENTED WITHIN 7 CALENDAR DAYS OF THE LAST DISTURBANCE OF THE SOIL SURFACE.

6) STABILIZE AND PROTECT SOIL SURFACES TO MINIMIZE THE GENERATION OF DUST AND THE OFF-SITE VEHICLE TRACKING OF SOIL MATERIALS.

7) PROVIDE EROSION CONTROL FABRIC ON SLOPES 3H ON 1V AND STEEPER OR WHERE SHOWN ON THE DRAWINGS. EROSION CONTROL FABRIC SHALL BE AS SPECIFIED AND SHALL BE INSTALLED IN ACCORDANCE WITH THE MANUFACTURER'S WRITTEN INSTRUCTIONS.

8) ALL IMPLEMENTED MEASURES SHALL BE MAINTAINED IN A TIMELY MANNER. THE EFFECTIVENESS OF ALL MEASURES, ALL DISTURBED AREAS, AREAS USED FOR THE STORAGE OF MATERIALS THAT ARE EXPOSED TO PRECIPITATION AND HAVE NOT BEEN FINALLY STABILIZED, AND LOCATIONS WHERE VEHICLES ENTER OR EXIT THE SITE SHALL BE INSPECTED TWICE WEEKLY UNTIL THE ENTIRE SITE IS AT FINAL STABILIZATION. INSPECTIONS SHALL BE SEPARATED BY AT LEAST TWO CALENDAR DAYS. DEFICIENCIES FOUND SHALL BE CORRECTED WITHIN 7 CALENDAR DAYS OF INSPECTION.

9) THE GENERAL CONTRACTOR SHALL BE RESPONSIBLE FOR THE IMPLEMENTATION AND MAINTENANCE OF ALL CONTROL MEASURES. ALL INSPECTIONS SHALL BE JOINTLY CONDUCTED BY THE DEPARTMENT AND THE GENERAL CONTRACTOR.

NYS Department of Environmental Conservation
Bureau of Design & Construction

Belleayre Mtn. Ski Center UMP
Snowmaking Pond
Erosion Control Details 1/2
NOVEMBER 2012

SM16

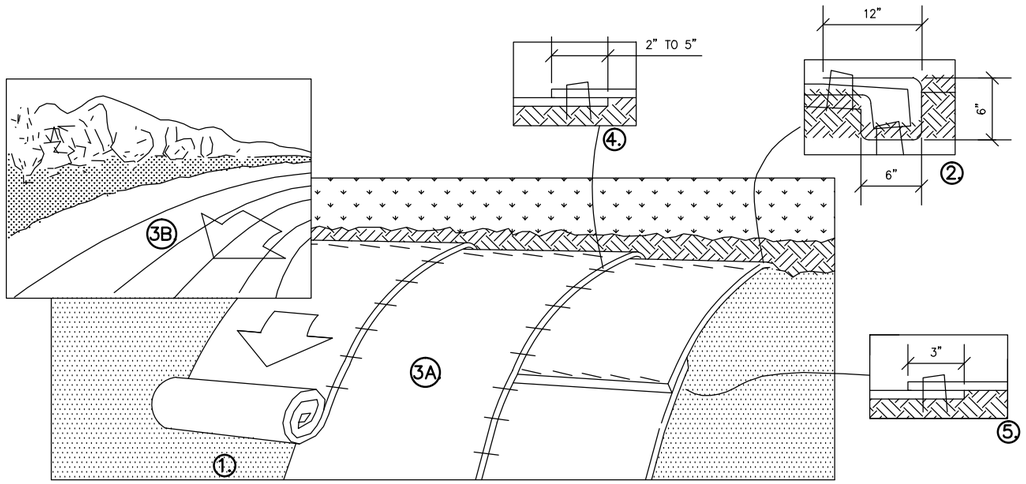

EROSION CONTROL MAT DETAIL 1 SM17

SCALE: N.T.S.

1. PREPARE SOIL BEFORE INSTALLING ROLLED EROSION CONTROL PRODUCTS (RECP's), INCLUDING ANY NECESSARY APPLICATION OF LIME, FERTILIZER, AND SEED. NOTE: WHEN USING CELL-O-SEED DO NOT SEED PREPARED AREA. CELL-O-SEED MUST BE INSTALLED WITH PAPER SIDE DOWN.
2. BEGIN AT THE TOP OF THE SLOPE BY ANCHORING THE RECP's IN A 6" DEEP X 6" WIDE TRENCH WITH APPROXIMATELY 12" OF RECP's EXTENDED BEYOND THE UP-SLOPE PORTION OF THE TRENCH. ANCHOR THE RECP's WITH A ROW OF STAPLES/STAKES APPROXIMATELY 12" APART IN THE BOTTOM OF THE TRENCH. BACKFILL AND COMPACT THE TRENCH AFTER STAPLING. APPLY SEED TO COMPACTED SOIL AND FOLD REMAINING 12" PORTION OF RECP's BACK OVER SEED AND COMPACTED SOIL. SECURE RECP's OVER COMPACTED SOIL WITH A ROW OF STAPLES/STAKES SPACED APPROXIMATELY 12" APART ACROSS THE WIDTH OF THE RECP's.
3. ROLL THE RECP's (A.) DOWN OR (B.) HORIZONTALLY ACROSS THE SLOPE. RECP's WILL UNROLL WITH APPROPRIATE SIDE AGAINST THE SOIL SURFACE. ALL RECP's MUST BE SECURELY FASTENED TO SOIL SURFACE BY PLACING STAPLES/STAKES ™ IN APPROPRIATE LOCATIONS AS SHOWN IN THE STAPLE PATTERN GUIDE. WHEN USING THE DOT SYSTEM , STAPLES/STAKES SHOULD BE PLACED THROUGH EACH OF THE COLORED DOTS CORRESPONDING TO THE APPROPRIATE STAPLE PATTERN.
4. THE EDGES OF PARALLEL RECP's MUST BE STAPLED WITH APPROXIMATELY 2" – 5" OVERLAP DEPENDING ON RECP's TYPE.
5. CONSECUTIVE RECP's SPLICED DOWN THE SLOPE MUST BE PLACED END OVER END (SHINGLE STYLE) WITH AN APPROXIMATE 3" OVERLAP. STAPLE THROUGH OVERLAPPED AREA, APPROXIMATELY 12" APART ACROSS ENTIRE RECP's WIDTH.

NOTE: IN LOOSE SOIL CONDITIONS, THE USE OF STAPLE OR STAKE LENGTHS GREATER THAN 6" MAY BE NECESSARY TO PROPERLY SECURE THE RECP's.

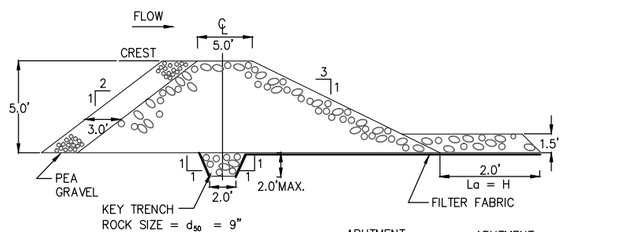

SECTION A–A
NOT TO SCALE

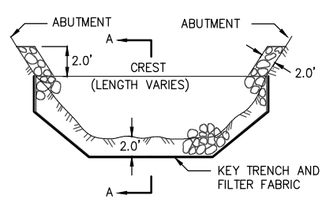

PROFILE
NOT TO SCALE

CONSTRUCTION SPECIFICATIONS

1. THE AREA UNDER THE ROCK DAM SHALL BE CLEARED AND STRIPPED OF ROOTS AND OTHER OBJECTIONABLE MATERIAL. THE RESERVOIR SHALL BE CLEARED AS NEEDED TO FACILITATE SEDIMENT REMOVAL.
2. DIMENSIONS SHOWN ARE MINIMUM. TRENCH SHALL BE EXCAVATED FROM ABUTMENT TO ABUTMENT ON THE DAM CENTERLINE. FILTER FABRIC SHALL BE PLACED FROM UPSTREAM EDGE OF KEYTRENCH TO DOWNSTREAM EDGE OF APRON. JOINTS WILL LAP A MINIMUM OF 1 FT. WITH UPSTREAM STRIP ON TOP.
3. CONSTRUCT THE ROCK EMBANKMENT TO THE DIMENSIONS SHOWN ON THE DRAWING. ROCK ABUTMENTS SHALL BE MAINTAINED 2 FT. ABOVE THE CREST.
4. THE ROCK DAM SHALL BE CONSTRUCTED PRIOR TO CLEARING THE BASIN AREA. STABILIZE ALL DISTURBED AREAS, EXCEPT THE BASIN AREA, WITH TEMPORARY SEEDING.
5. FENCES AND WARNING SIGNS SHOULD BE PLACED AS APPROPRIATE.

MAXIMUM DRAINAGE AREA: 50 ACRES

ROCK DAM 2 SM17

SCALE: N.T.S.

NYS Department of Environmental Conservation
Bureau of Design & Construction

Belleayre Mtn. Ski Center UMP
Snowmaking Pond
Erosion Control Details 2/2
NOVEMBER 2012

SM17

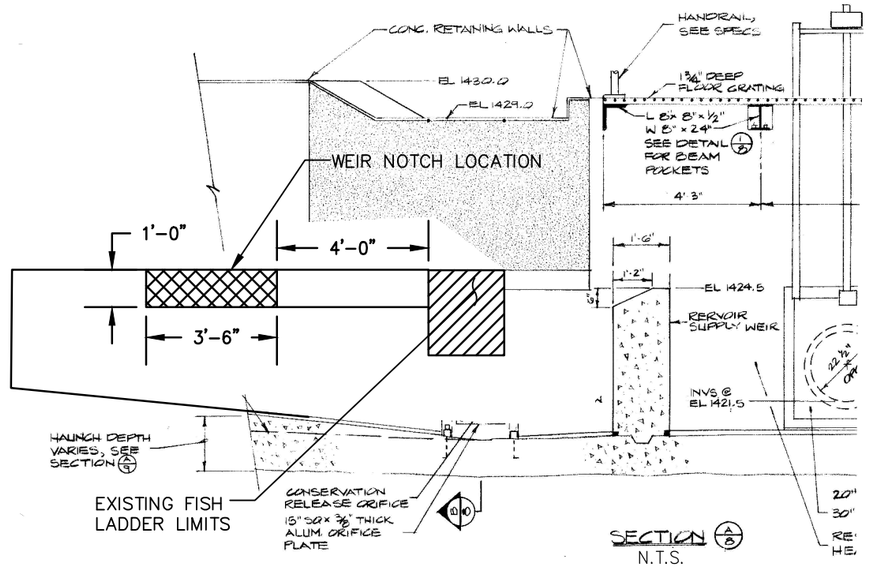

SECTION
N.T.S.

NOTE: REINFORCING STEEL NOT SHOWN SEE DRAWING # 9 FOR REINFORCING STEEL. REINFORCEMENT FOR SUPPLY WEIR TO BE SIMILAR TO REINFORCEMENT FOR OVERFLOW WEIR.

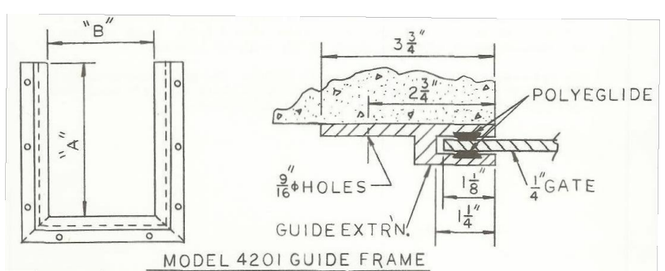

MODEL 4201 GUIDE FRAME

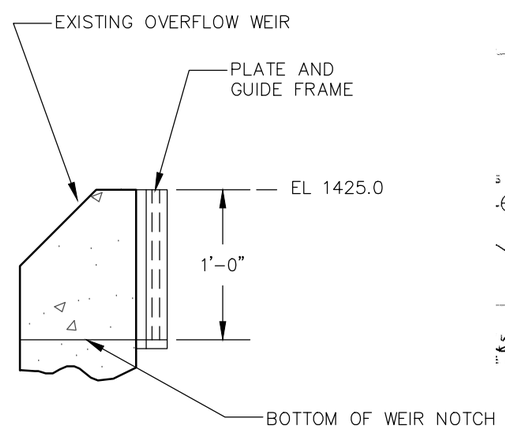

STOP GATE & GUIDE FRAME DETAIL AND SECTION

2
SM20

N.T.S.

NOTES:

1) 'A' DIMENSION SHALL BE 12". 'B' DIMENSION SHALL BE 42".

2) ANCHORS SHALL BE 1/2" X 6.1/2" HILTI HAS-R 304 STAINLESS STEEL THREADED RODS ANCHORED WITH HIT-HY 150 EPOXY.

3) REMOVE PLATE BETWEEN OCTOBER 15TH AND APRIL 15TH OF EACH YEAR TO INCREASE THE CONSERVATION FLOW IN THE STREAM TO 8CFS BEFORE ANY WATER CAN BE DIVERTED TO PINE HILL LAKE.

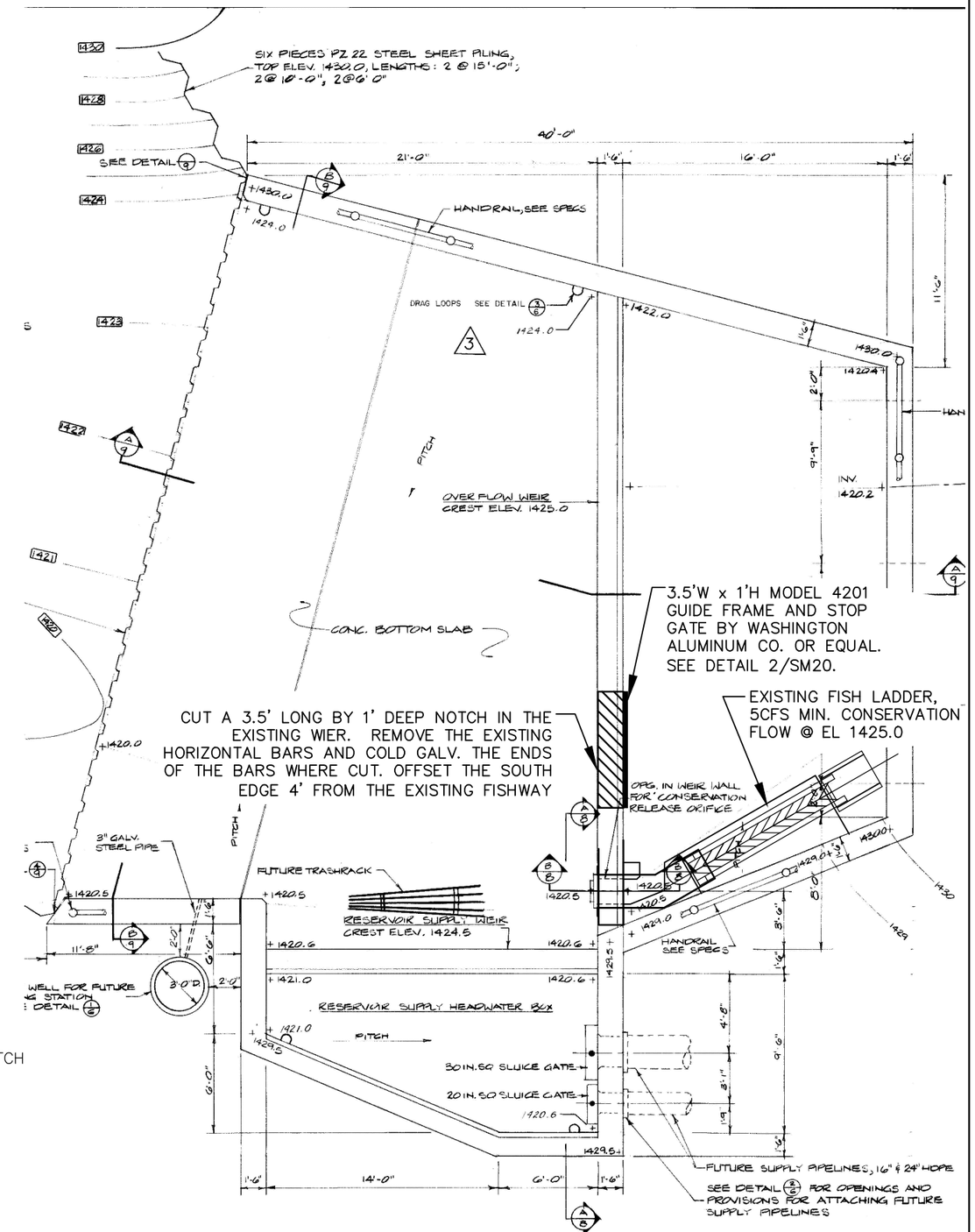

INTAKE/CONTROL STRUCTURE PLAN
N.T.S.

NYS Department of Environmental Conservation
Bureau of Design & Construction

Belleayre Mtn. Ski Center UMP
Pine Hill Lake
Inlet Diversion Modifications
MARCH 2011

SM20

P:\Projects\03-2120\UMP Drawings\Snowmaking Pond\Pine Hill Lake Inlet Diversion Modifications.dwg, 4/11/2011 12:19:20 PM

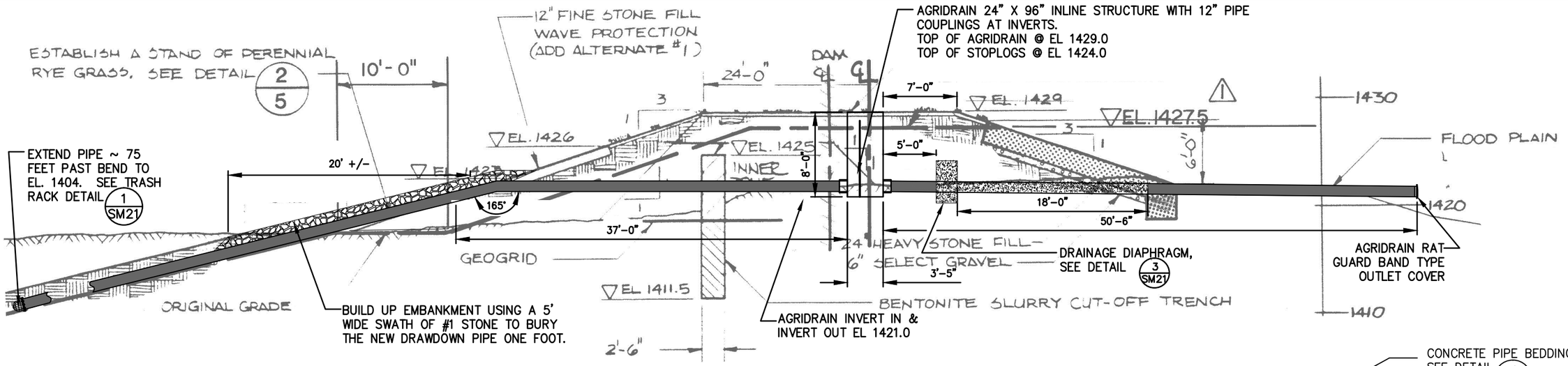

PROPOSED COLD WATER OUTLET ELEVATION

SCALE: 1"=10'

NOTES:

1.) LOCATE 12 BARS EVENLY AROUND PLATE; FILLET WELD EACH END OF BAR TO PLATE
2.) TRASH RACK TO BE HOT DIPPED GALVANIZED AFTER FABRICATION

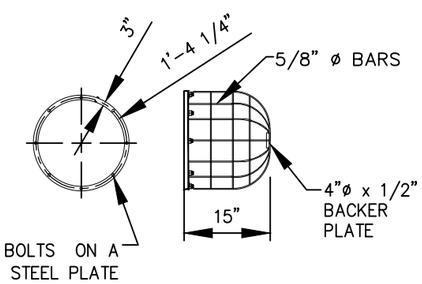

TRASH RACK DETAIL 1/SM21

SCALE: N.T.S.

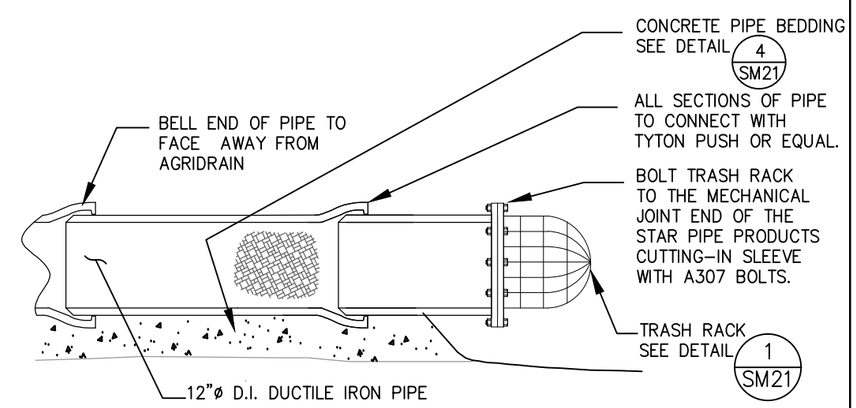

PIPE AND TRASH RACK DETAIL 2/SM21

SCALE: N.T.S.

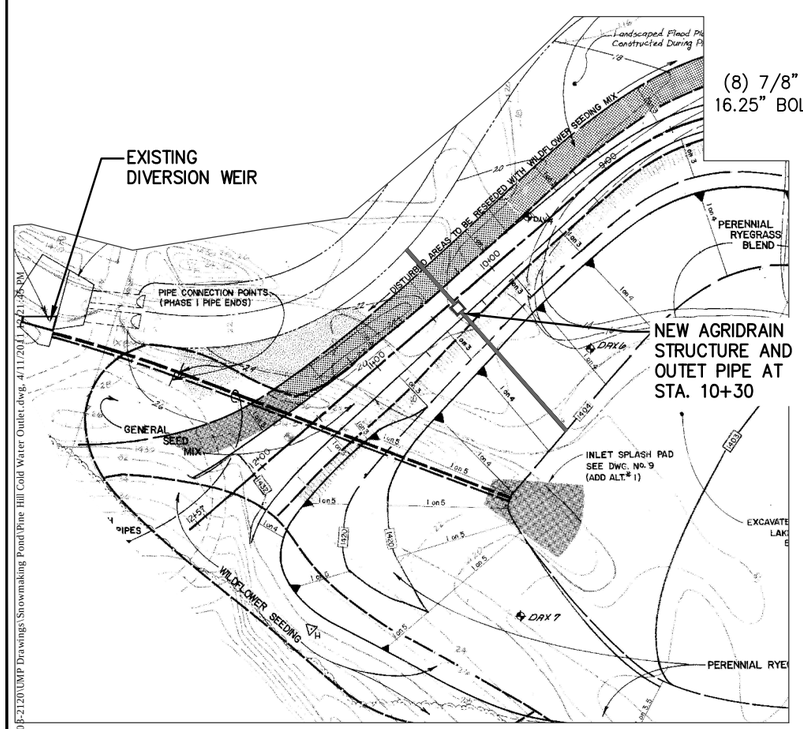

COLD WATER OUTLET PLAN

SCALE: 1"=100'

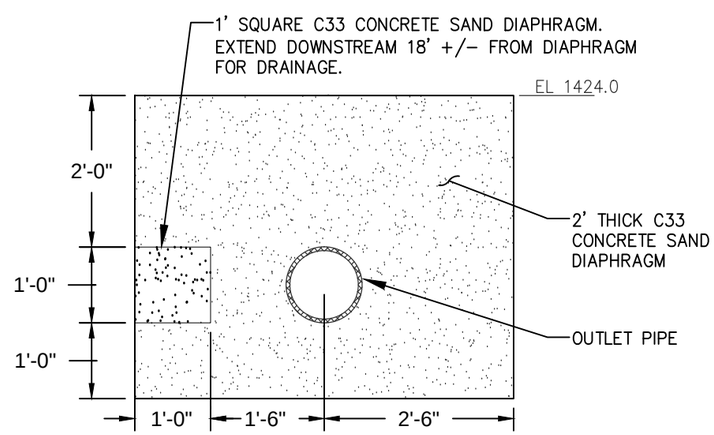

DRAINAGE DIAPHRAGM DETAIL 3/SM21

SCALE: 1"=2'

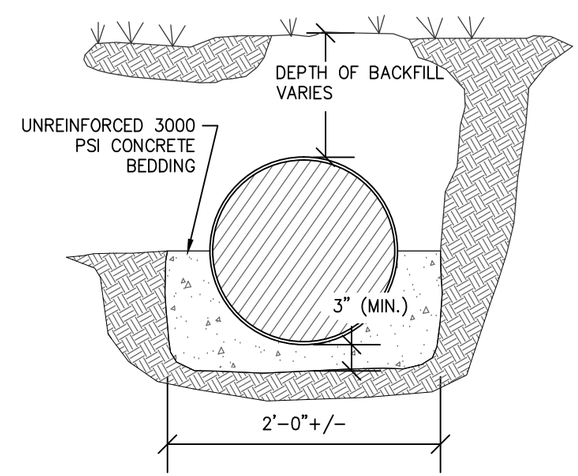

CONCRETE PIPE BEDDING DETAIL 4/SM21

SCALE: N.T.S.

NYS Department of Environmental Conservation
Bureau of Design & Construction

Belleayre Mtn. Ski Center UMP
Pine Hill Lake
Cold Water Outlet
MARCH 2011

SM21

P:\Projects\0B-2120\UMP Drawings\Snowmaking Pond\Pine Hill Cold Water Outlet.dwg, 4/11/2011 12:21:25 PM

NYS Department of Environmental Conservation
Bureau of Design & Construction

Belleayre Mtn. Ski Center UMP
Snowmaking Pond
Aeration System

NOVEMBER 2012

SM22