P:\Projects\03-2120\UMP Drawings\PR LIFT & TRAILS.dwg, 12/29/2010 9:32:04 AM, DWG To PDF Bonus Pack.pc3

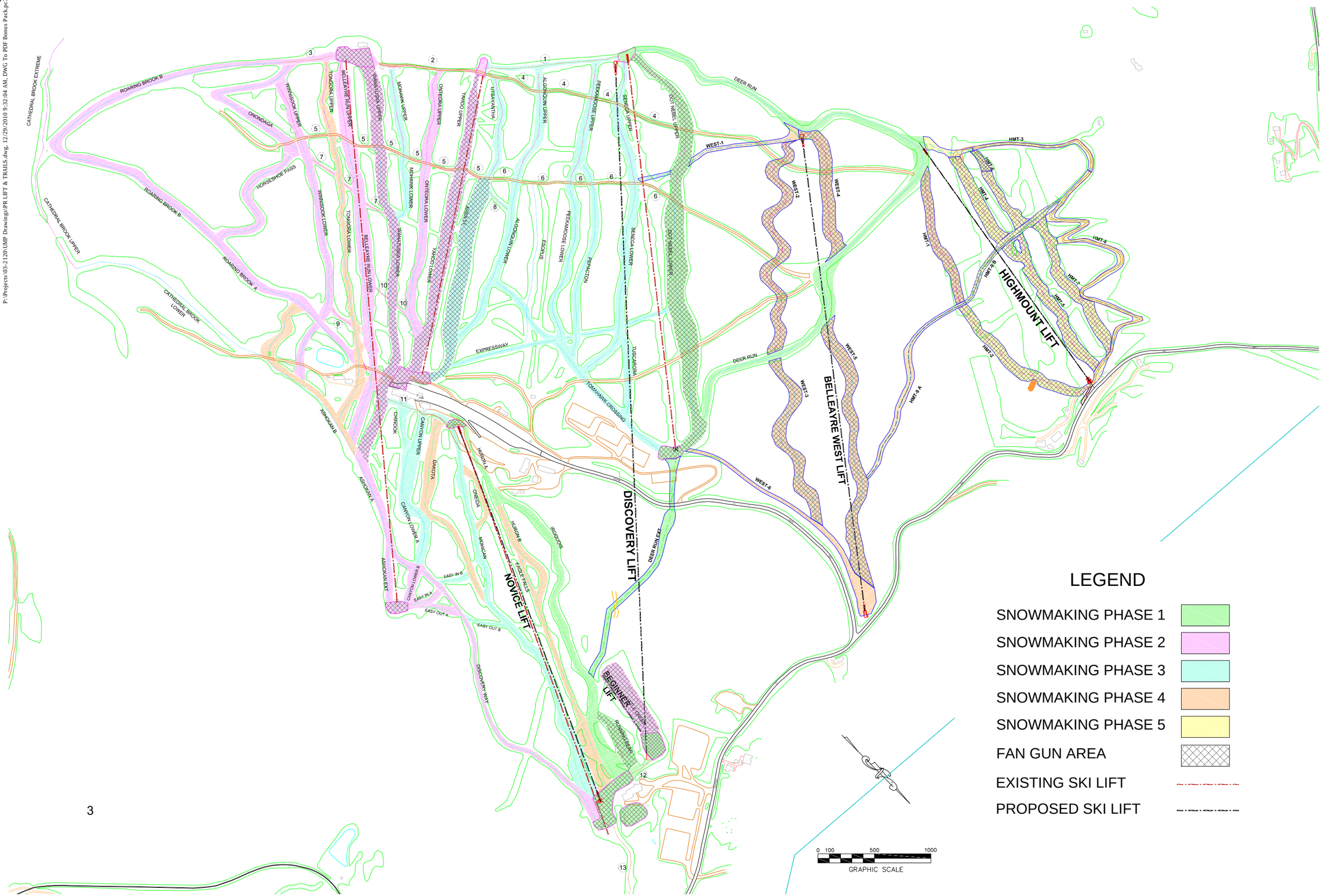


NYS Department of Environmental Conservation
Bureau of Design & Construction

Belleayre Mtn. Ski Center UMP
Proposed Snowmaking Phasing Plan

JANUARY 2011

SM1

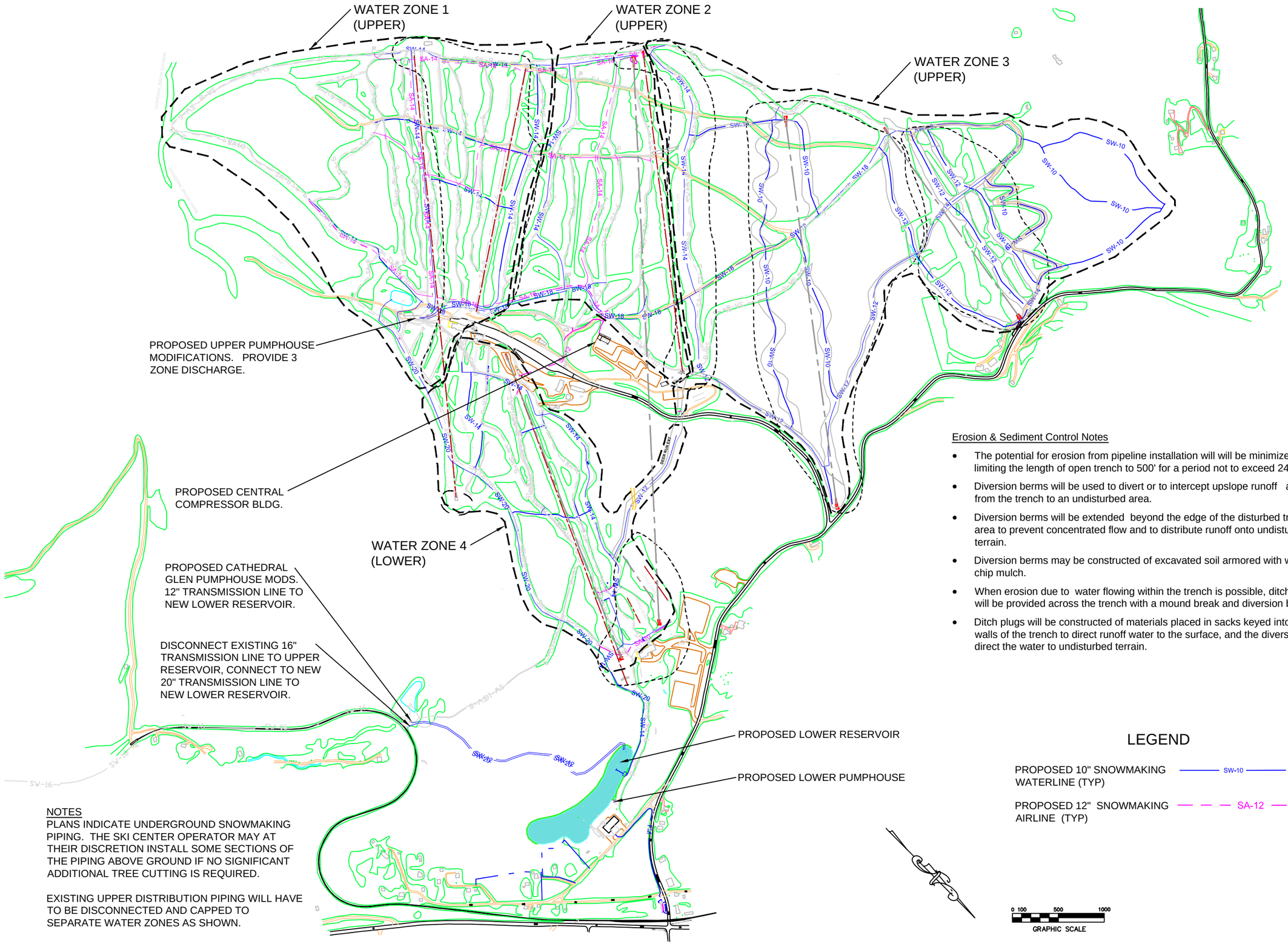


Erosion & Sediment Control Notes

- The potential for erosion from pipeline installation will will be minimized by limiting the length of open trench to 500' for a period not to exceed 24 hours.
- Diversion berms will be used to divert or to intercept upslope runoff away from the trench to an undisturbed area.
- Diversion berms will be extended beyond the edge of the disturbed trench area to prevent concentrated flow and to distribute runoff onto undisturbed terrain.
- Diversion berms may be constructed of excavated soil armored with wood chip mulch.
- When erosion due to water flowing within the trench is possible, ditch plugs will be provided across the trench with a mound break and diversion berm.
- Ditch plugs will be constructed of materials placed in sacks keyed into the walls of the trench to direct runoff water to the surface, and the diversion shall direct the water to undisturbed terrain.

LEGEND

PROPOSED 10" SNOWMAKING WATERLINE (TYP) — SW-10 —

PROPOSED 12" SNOWMAKING AIRLINE (TYP) — — — SA-12 — —

NOTES

PLANS INDICATE UNDERGROUND SNOWMAKING PIPING. THE SKI CENTER OPERATOR MAY AT THEIR DISCRETION INSTALL SOME SECTIONS OF THE PIPING ABOVE GROUND IF NO SIGNIFICANT ADDITIONAL TREE CUTTING IS REQUIRED.

EXISTING UPPER DISTRIBUTION PIPING WILL HAVE TO BE DISCONNECTED AND CAPPED TO SEPARATE WATER ZONES AS SHOWN.

NYS Department of Environmental Conservation
Bureau of Design & Construction

Belleayre Mtn. Ski Center UMP
Proposed Snowmaking Piping Plan
NOV., 2012

SM2

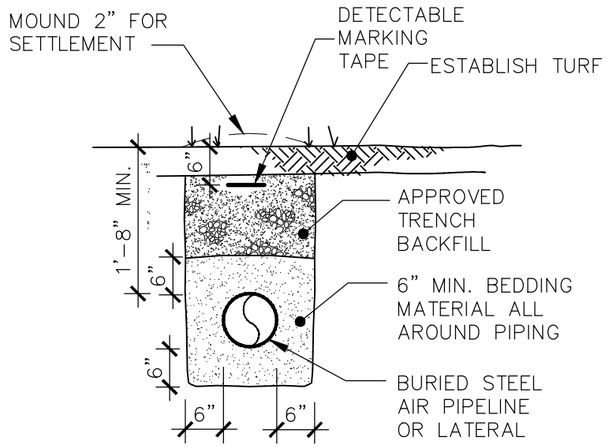


AIR PIPELINE TRENCH DETAIL 1 SM3

SCALE: 1/2" = 1'-0"

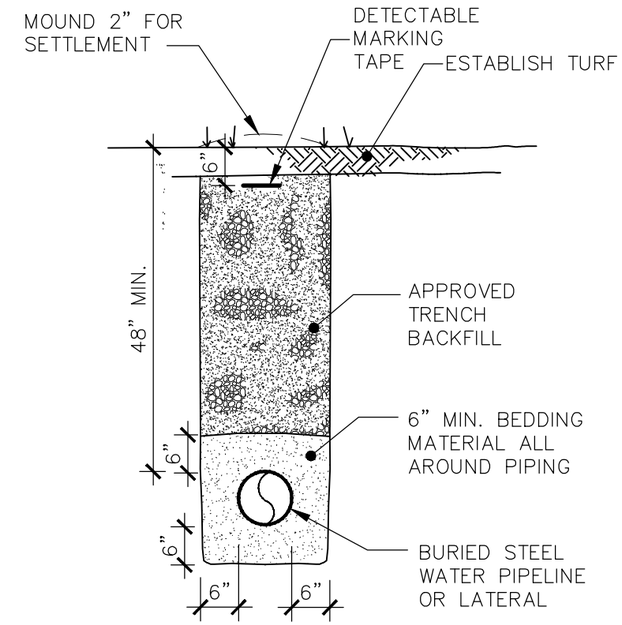


WATER PIPELINE TRENCH DETAIL 2 SM3

SCALE: 1/2" = 1'-0"

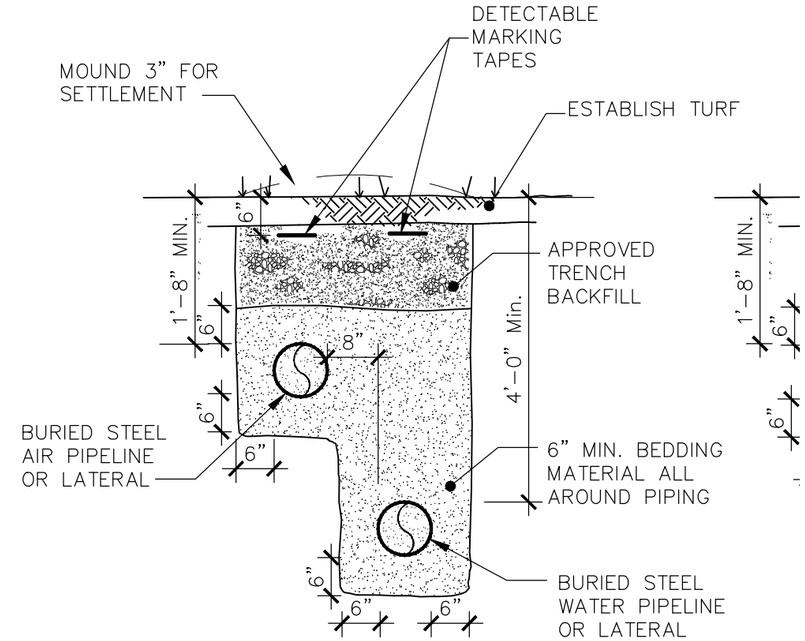


TWIN PIPE TRENCH DETAIL 3 SM3

SCALE: 1/2" = 1'-0"

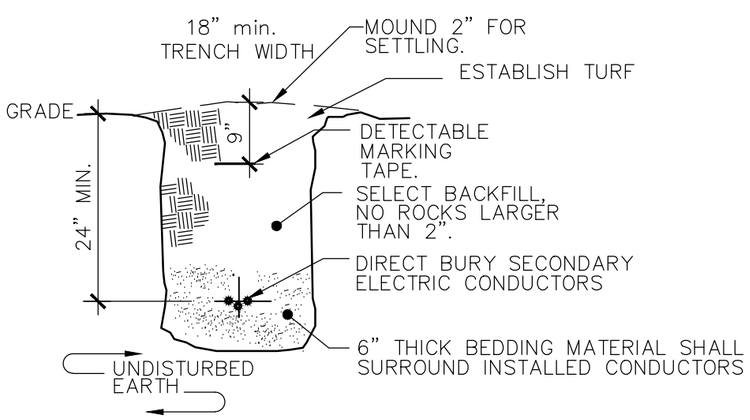


SECONDARY ELECTRIC TRENCH DETAIL 4 SM3

SCALE: 1/2" = 1'-0"

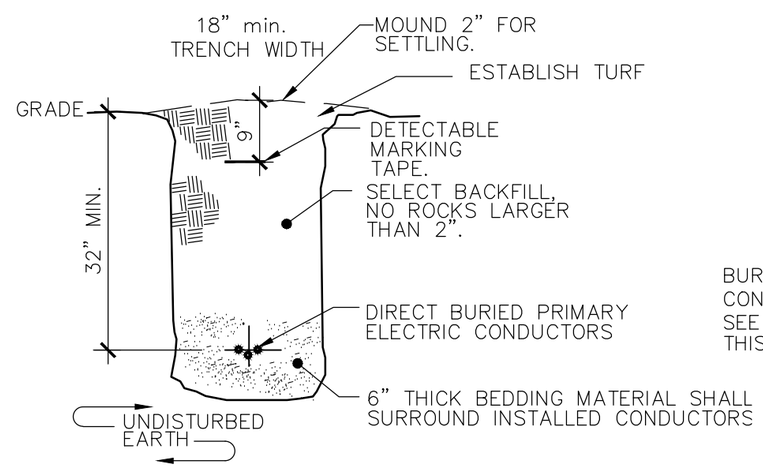


PRIMARY ELECTRIC TRENCH DETAIL 5 SM3

SCALE: 1/2" = 1'-0"

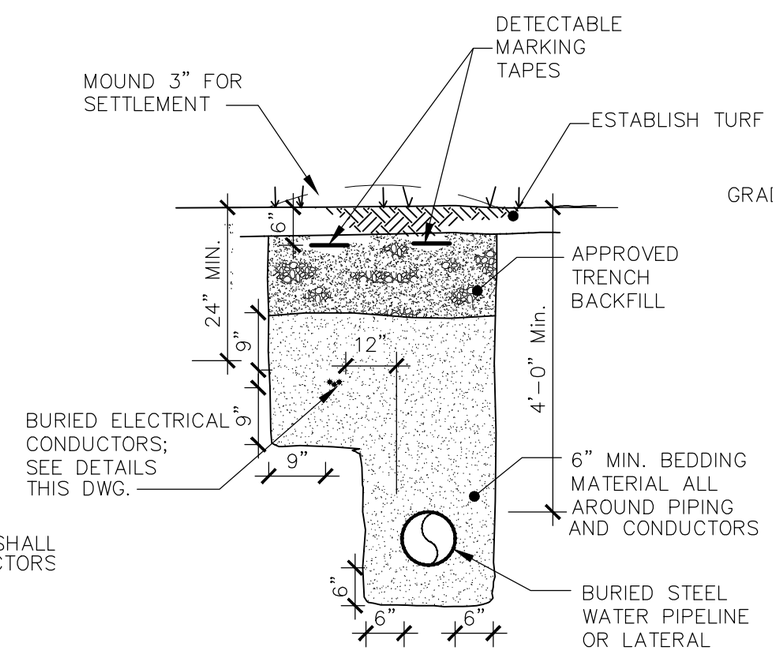


WATER AND ELECTRIC TRENCH DETAIL 6 SM3

SCALE: 1/2" = 1'-0"

NOTE

PLANS INDICATE UNDERGROUND SNOWMAKING PIPING. THE SKI CENTER OPERATOR MAY AT THEIR DISCRETION INSTALL SOME SECTIONS OF THE PIPING ABOVE GROUND IF NO SIGNIFICANT ADDITIONAL TREE CUTTING IS REQUIRED.

NYS Department of Environmental Conservation
Bureau of Design & Construction

Belleayre Mtn. Ski Center UMP
Proposed Snowmaking Details I

NOV., 2012

SM3

P:\Projects\03-2120\UMP Drawings\PR Snowmaking Details.dwg, 12/29/2010 9:51:35 AM, DWG To PDF Bonus Pack.pc3

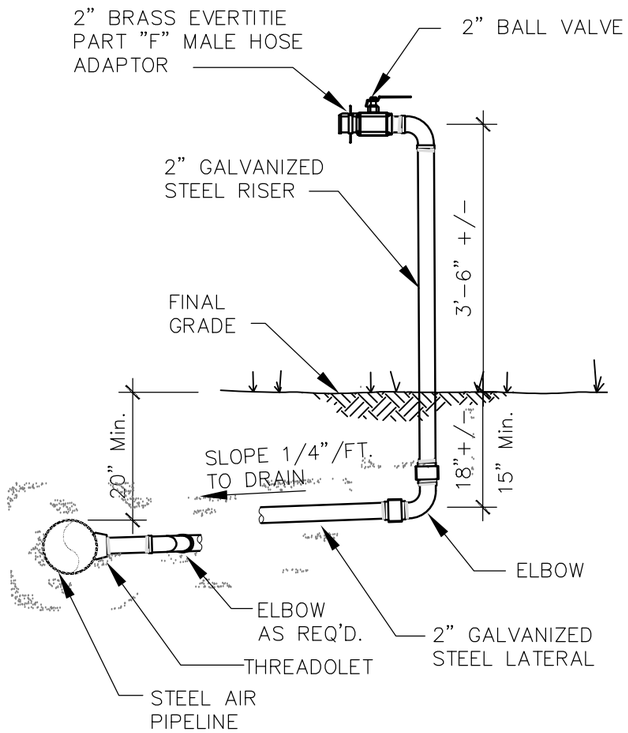


**AIR HYDRANT DETAIL** 1 SM4

SCALE: 1/2" = 1'-0"

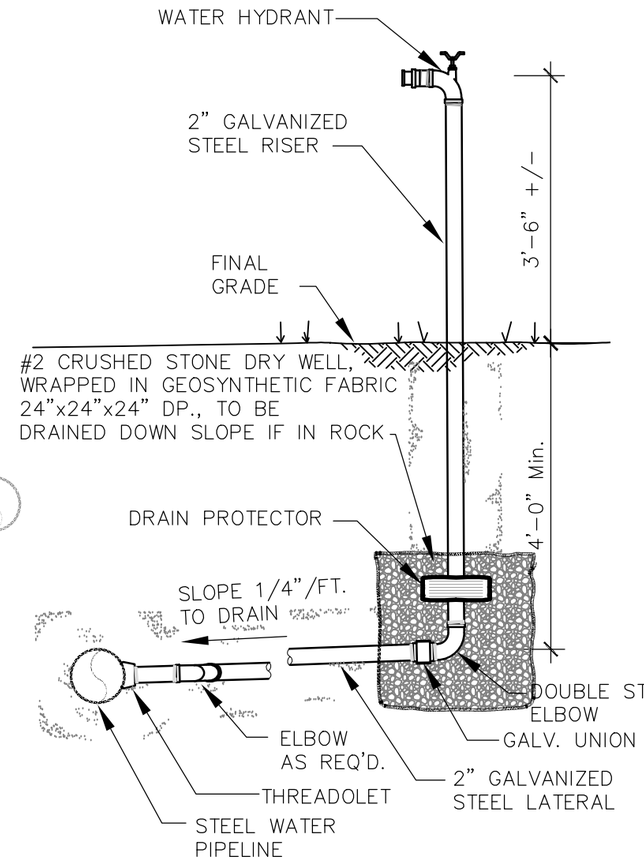


**WATER HYDRANT DETAIL** 2 SM4

SCALE: 1/2" = 1'-0"

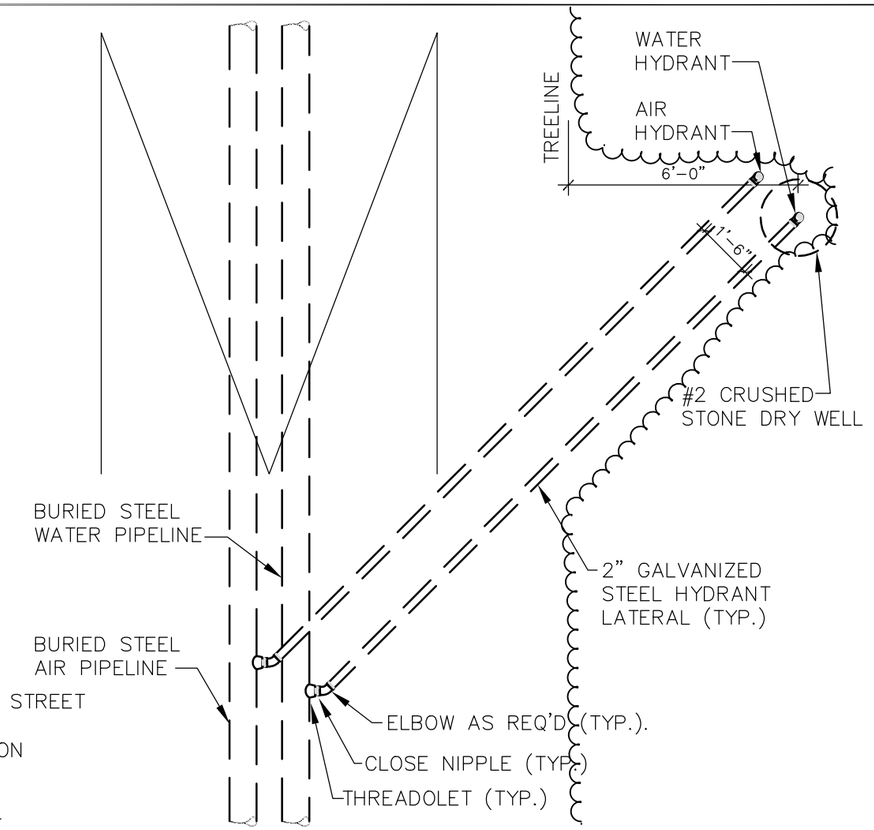


**HYDRANT INSTALLATION DETAIL** 3 SM4

SCALE: 1/4" = 1'-0"

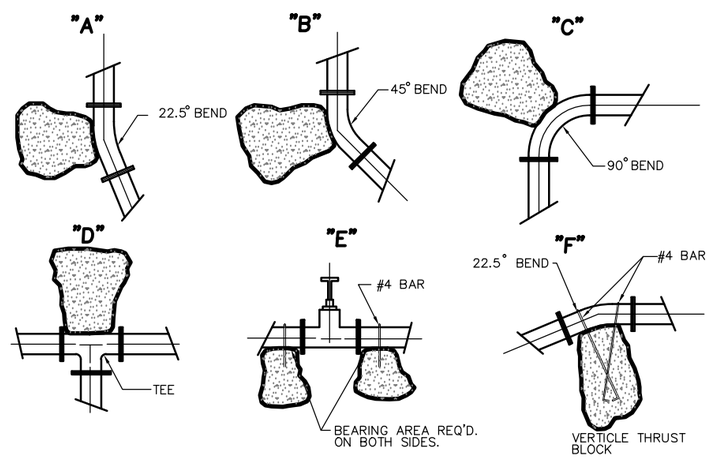


| CONCRETE AREA IN SQ. FT. AGAINST SOIL FOR EACH PIPE SIZE | | | | | | |
|---|---|---|---|---|---|---|
| BLOCK LETTER | PIPE SIZE | | | | | |
| | 4" | 6" | 8" | 10" | 12" | |
| A | 1.0 | 1.5 | 2.5 | 5.0 | 7.0 | |
| B | 0.5 | 1.0 | 1.5 | 3.0 | 3.5 | |
| C | 1.0 | 2.0 | 3.5 | 7.0 | 9.0 | |
| D | 1.5 | 3.0 | 5.0 | 10.0 | 13.0 | |
| E | 1.0 | 2.0 | 3.5 | 7.0 | 9.0 | |
| F | 2.0* | 3.0* | 5.0* | 10.0* | 13.0* | |

* CUBIC FEET OF CONCRETE REQUIRED

**CONCRETE THRUST BLOCK DETAIL**

N.T.S.

NOTES:

1.) CONCRETE THRUST BLOCK SHALL EXTEND FROM PIPE FITTING TO UNDISTURBED SOIL.

2.) THE AREA IN SQUARE FOOTAGE OF THE CONCRETE AT THE END LAYER AGAINST THE UNDISTURBED SOIL SHALL NOT BE LESS THAN THE TABULAR VALUES SHOWN.

3.) VALUES ARE BASED ON SOIL BEARING VALUE OF 2000 PSF.

4.) JOINT RESTAINT SYSTEMS MAY BE USED IN LIEU OF CONCRETE THRUST BLOCKS.

5.) CONTRACTOR SHALL SUBMIT JOINT MANUFACTURER'S LITERATURE AND CALCULATIONS.

NYS Department of Environmental Conservation
Bureau of Design & Construction

Belleayre Mtn. Ski Center UMP
Proposed Snowmaking Details II

JANUARY 2011

SM4

P:\Projects\03-2120\UMP Drawings\PR Snowmaking Details.dwg, 12/29/2010 9:52:38 AM, DWG To PDF Bonus Pack.pc3

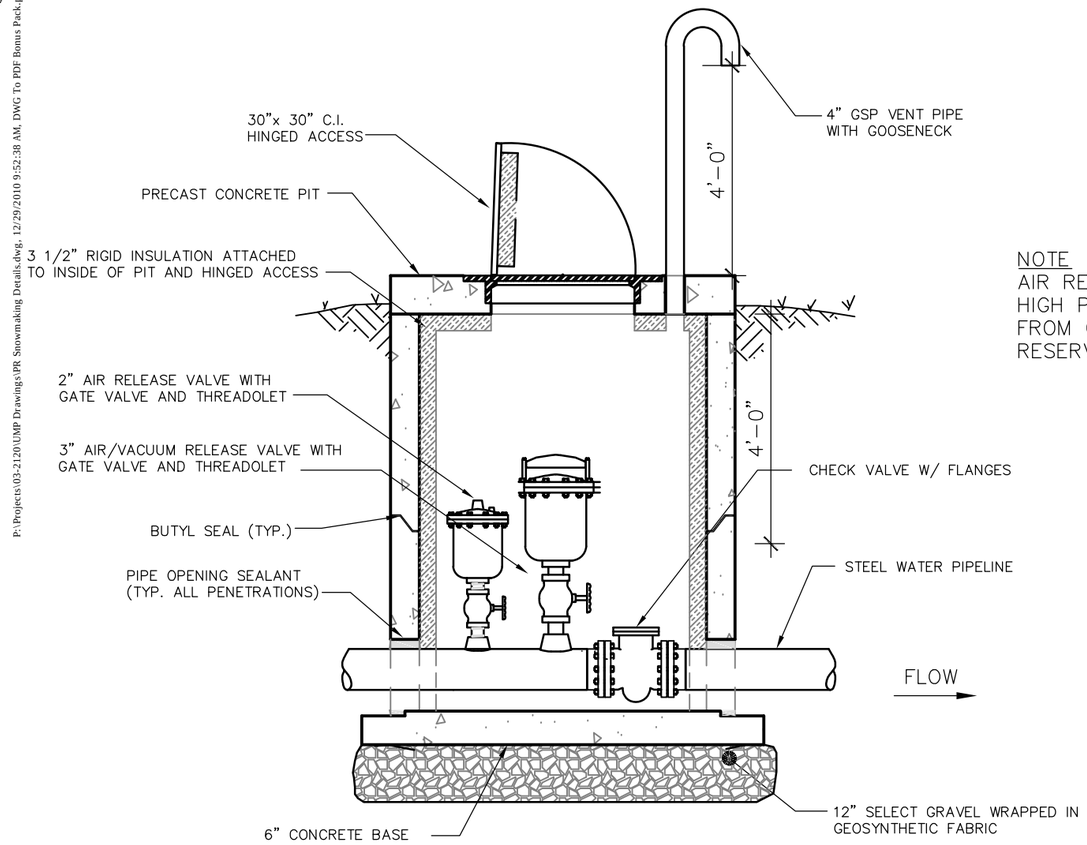


NOTE
AIR RELEASE REQUIRED TO BE INSTALLED ON HIGH POINT OF PROPOSED TRANSFER LINES FROM CATHEDRAL GLEN TO PROPOSED RESERVOIR.

**AIR RELEASE PIT DETAIL** 1 SM5

SCALE: N.T.S.

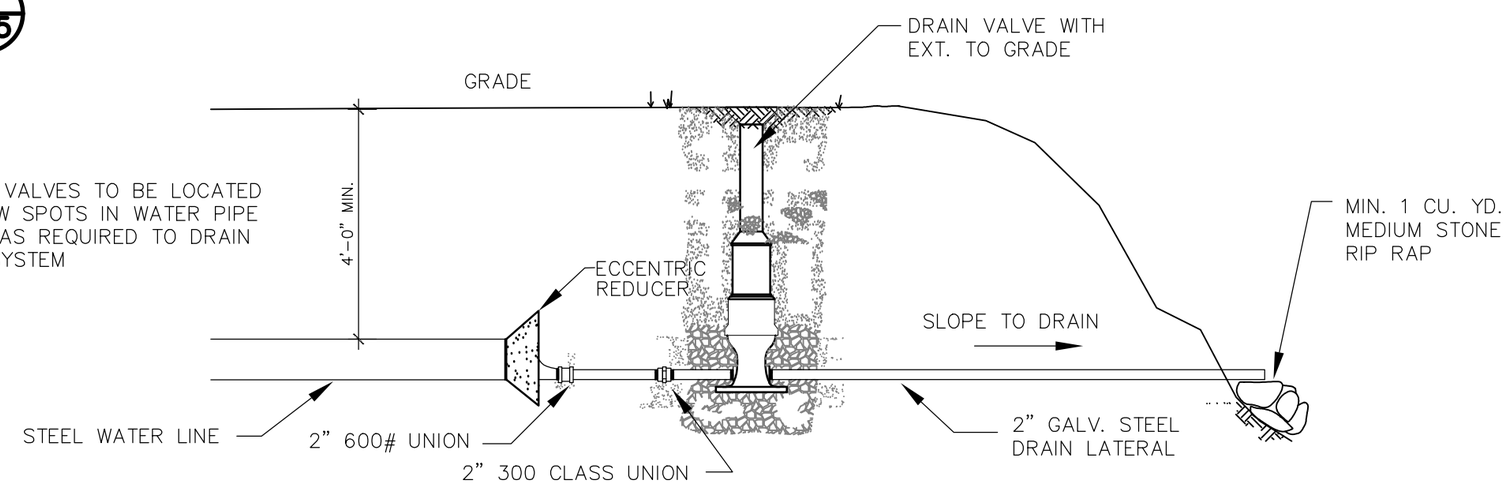


NOTE
DRAIN VALVES TO BE LOCATED AT LOW SPOTS IN WATER PIPE LINES AS REQUIRED TO DRAIN PIPE SYSTEM

**TRAILPIPING DRAIN VALVE DETAIL** 4 SM5

SCALE: 1/2" = 1'-0"

NYS Department of Environmental Conservation
Bureau of Design & Construction

Belleayre Mtn. Ski Center UMP
Proposed Snowmaking Details III

JANUARY 2011

SM5

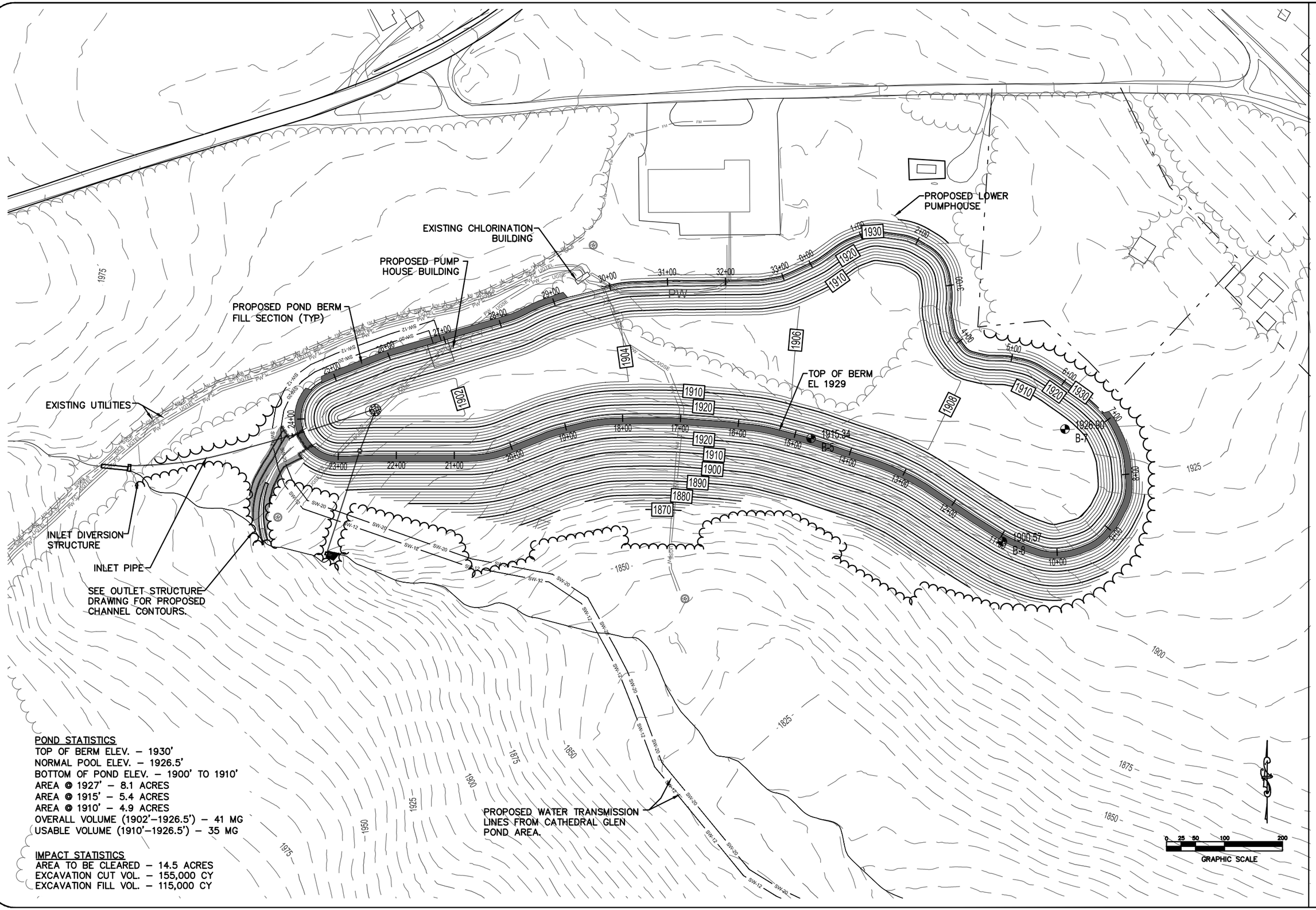


POND STATISTICS
TOP OF BERM ELEV. – 1930'
NORMAL POOL ELEV. – 1926.5'
BOTTOM OF POND ELEV. – 1900' TO 1910'
AREA @ 1927' – 8.1 ACRES
AREA @ 1915' – 5.4 ACRES
AREA @ 1910' – 4.9 ACRES
OVERALL VOLUME (1902'–1926.5') – 41 MG
USABLE VOLUME (1910'–1926.5') – 35 MG

IMPACT STATISTICS
AREA TO BE CLEARED – 14.5 ACRES
EXCAVATION CUT VOL. – 155,000 CY
EXCAVATION FILL VOL. – 115,000 CY

NYS Department of Environmental Conservation
Bureau of Design & Construction

Belleayre Mtn. Ski Center UMP
Snowmaking Pond
Finished Grading Plan
NOVEMBER 2012

SM7

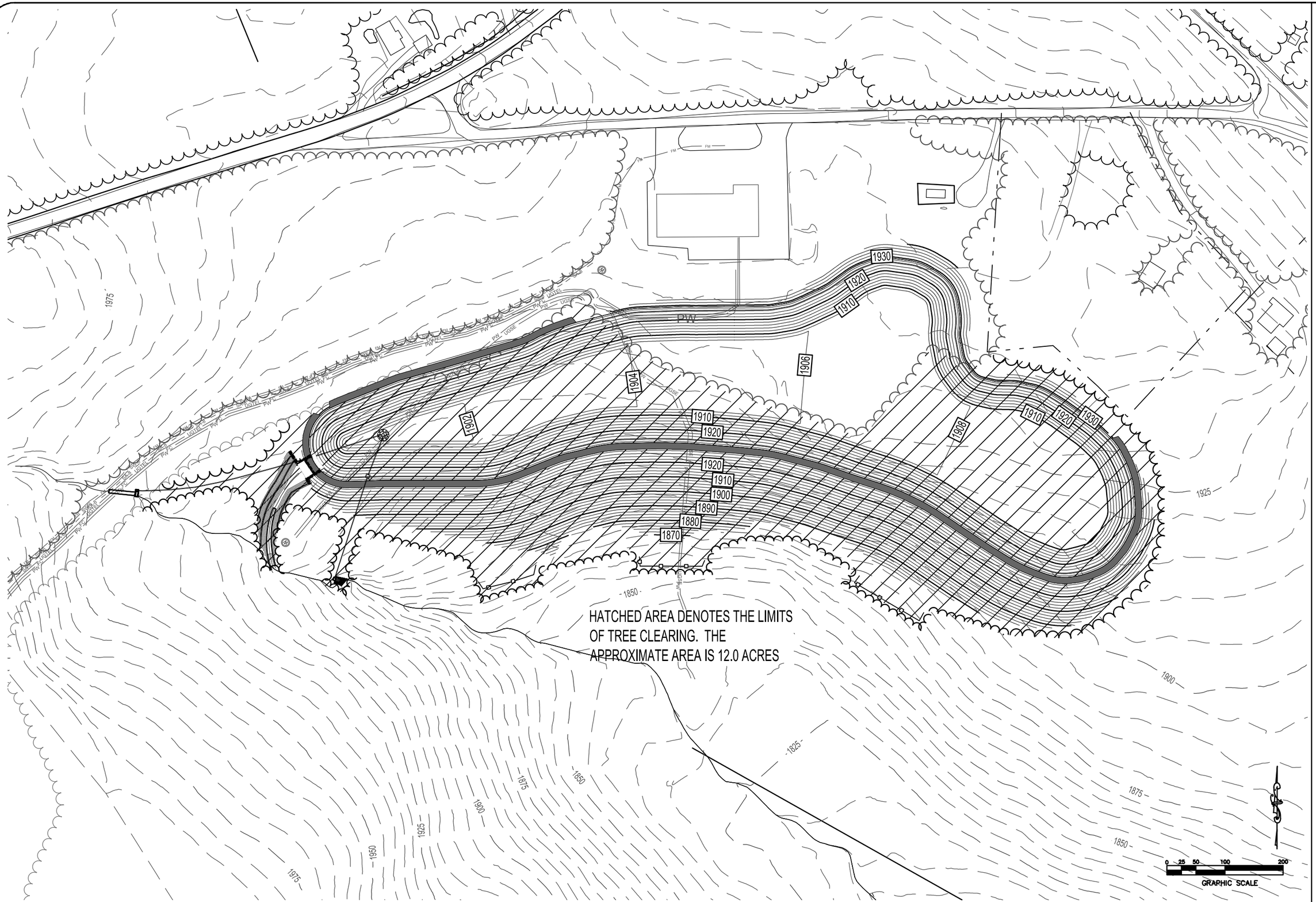


NYS Department of Environmental Conservation
Bureau of Design & Construction

Belleayre Mtn. Ski Center UMP
Snowmaking Pond Tree Clearing Limits
NOVEMBER 2012

SM8

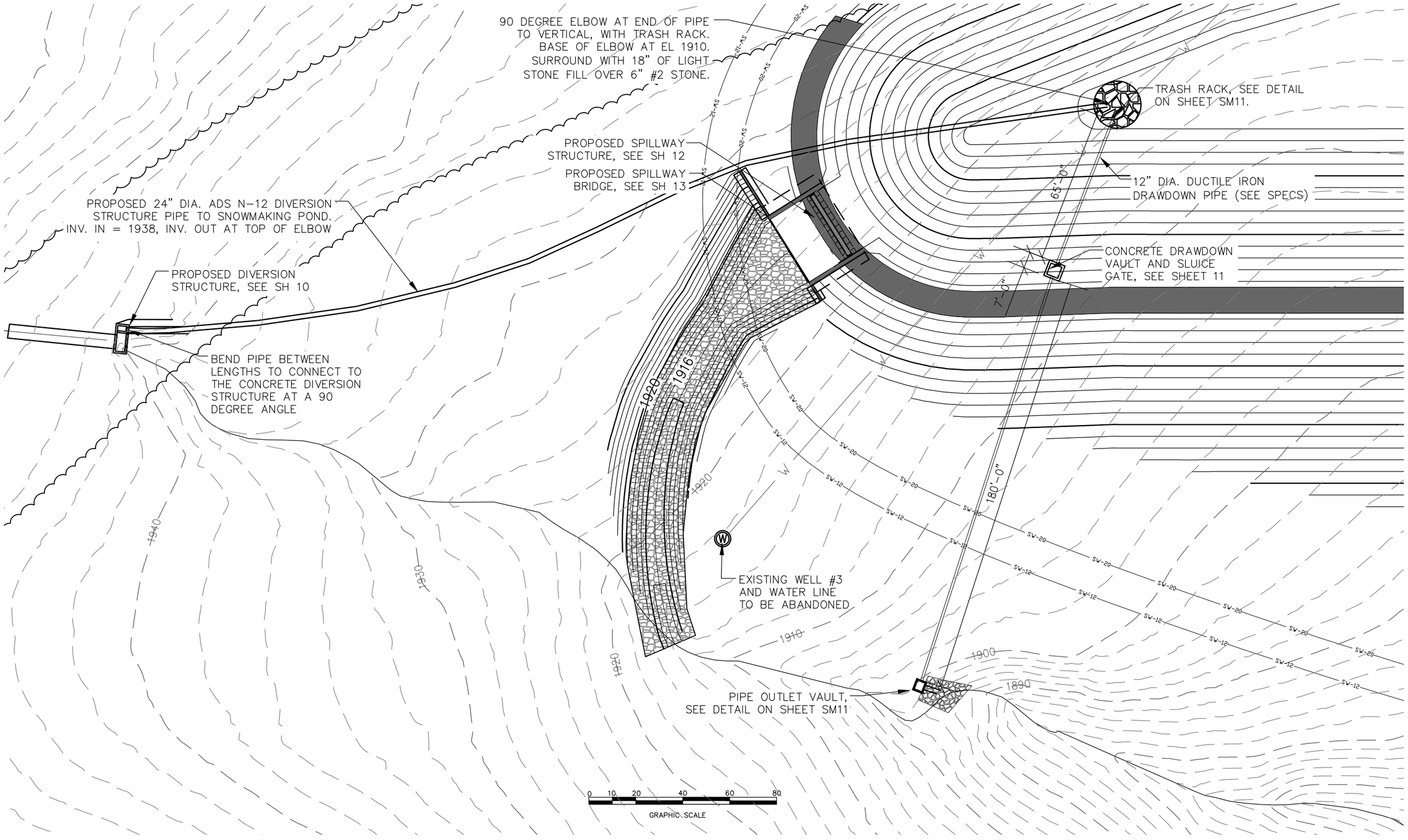


# PROPOSED POND GRADING AND STRUCTURES

SCALE: 1"=30'

NYS Department of Environmental Conservation
Bureau of Design & Construction

Belleayre Mtn. Ski Center UMP
Snowmaking Pond
Proposed Concrete Structures
NOVEMBER 2012

SM9

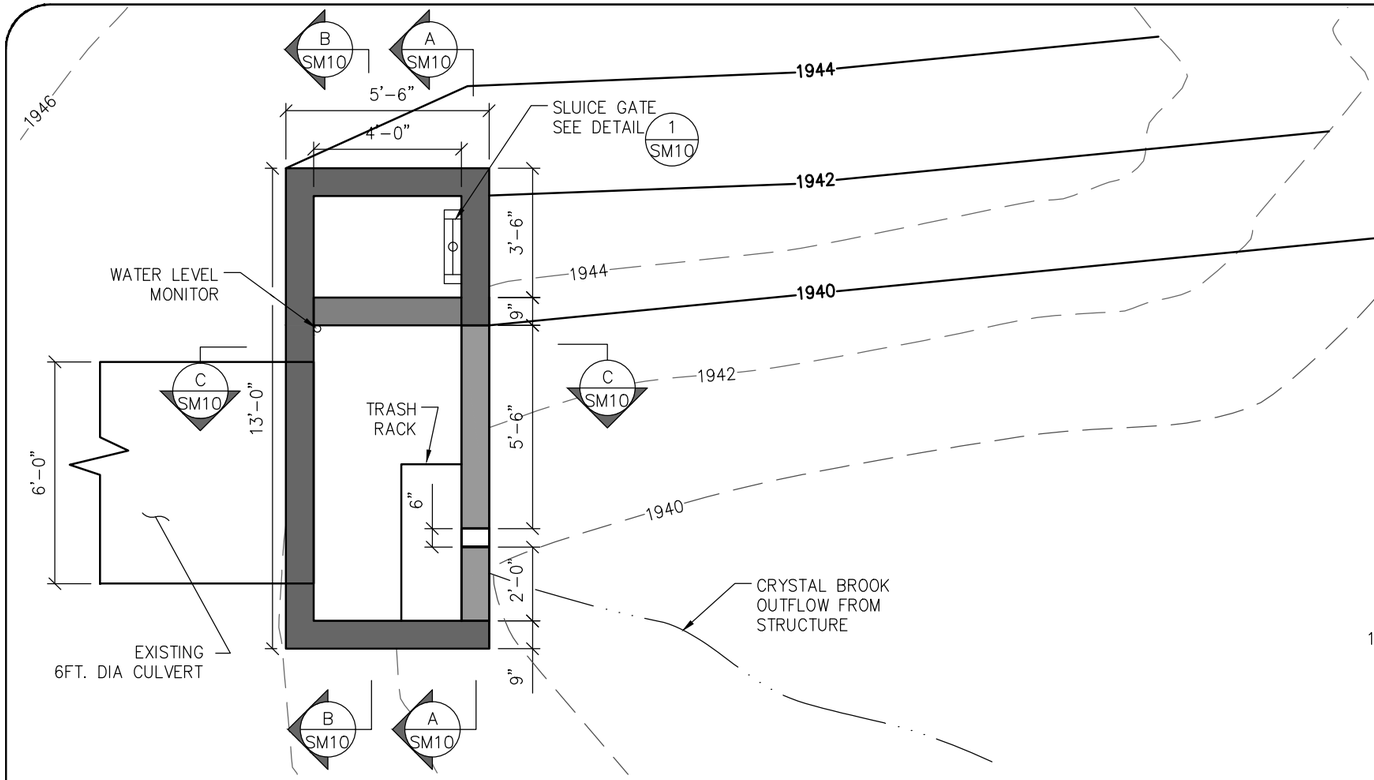


PROPOSED DIVERSION STRUCTURE PLAN

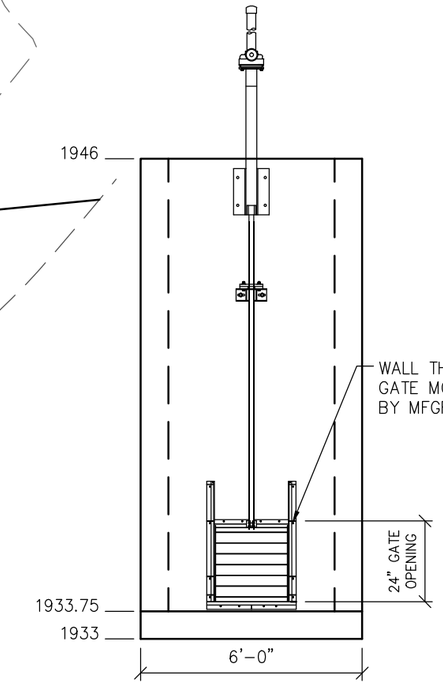


GATE DETAIL 1 SM10

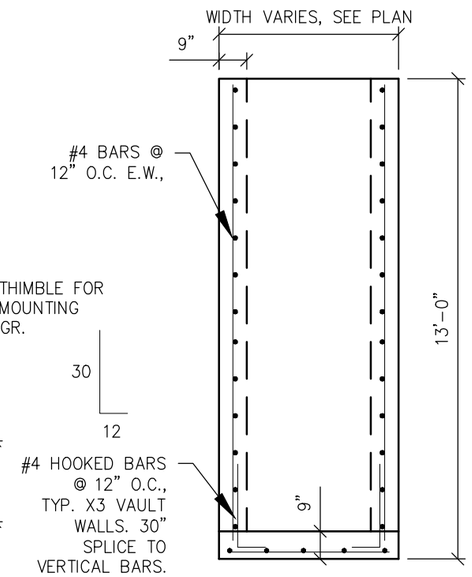


TYP. REINFORCEMENT 2 SM10

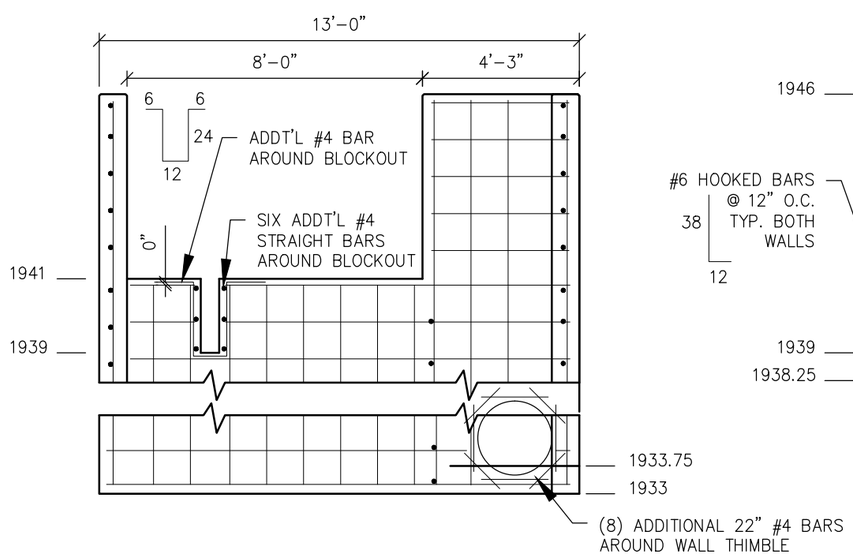


DIVERSION OUTLET SECTION A SM10

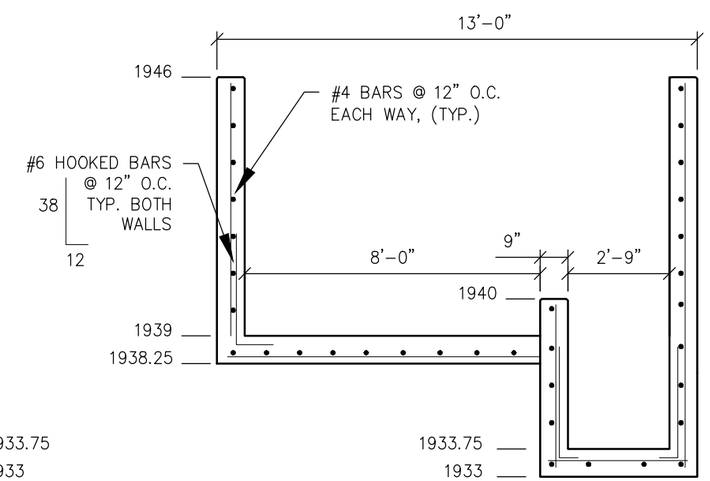


EAST SECTION B SM10

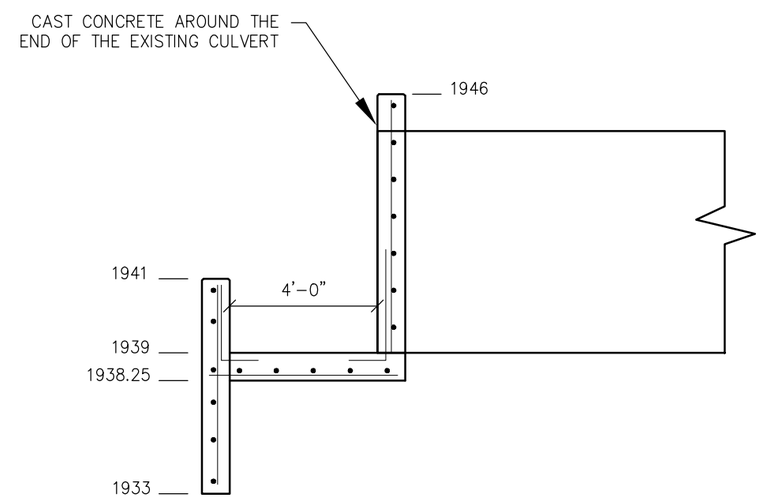


NORTH SECTION C SM10

NYS Department of Environmental Conservation
Bureau of Design & Construction

Belleayre Mtn. Ski Center UMP
Snowmaking Pond
Proposed Diversion Structure Details
NOVEMBER 2012

SM10

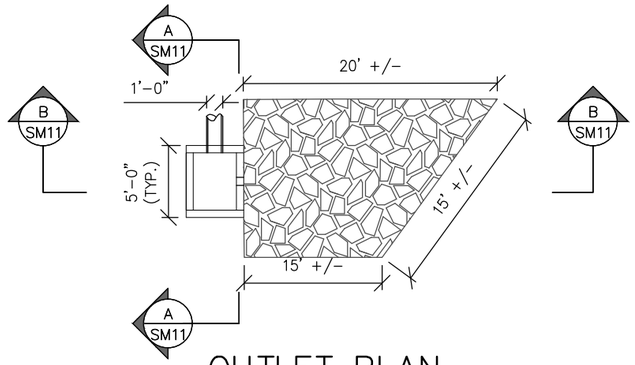


## OUTLET PLAN

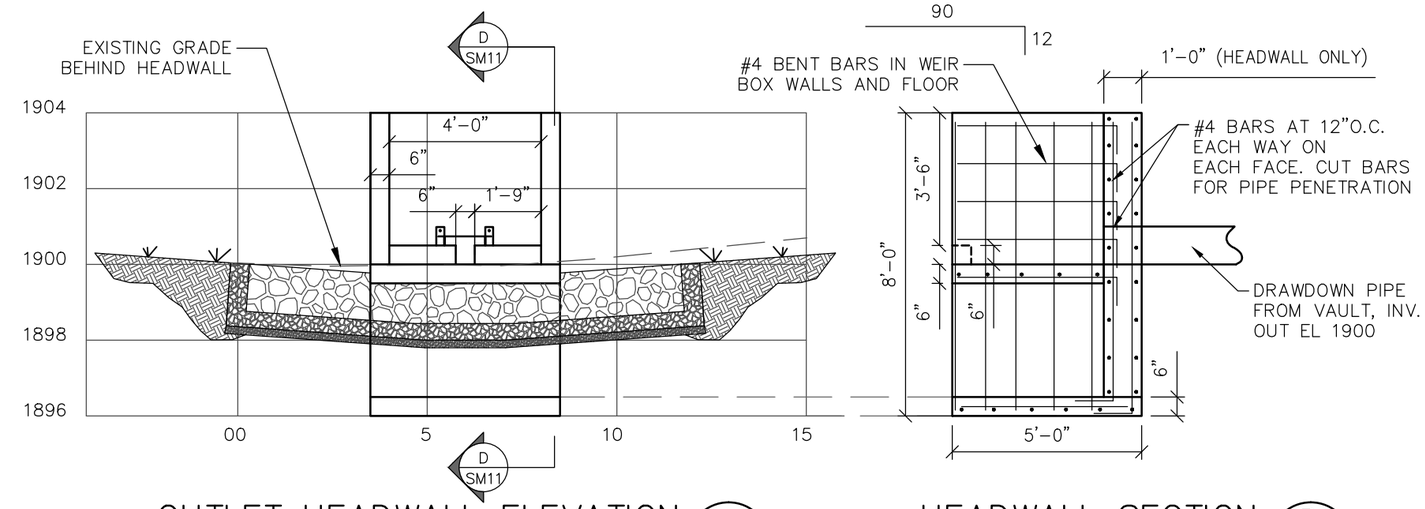


## OUTLET HEADWALL ELEVATION (A / SM11)

SCALE: 1/4"=1'-0"

## HEADWALL SECTION (D / SM11)

SCALE: 1/4"=1'-0"

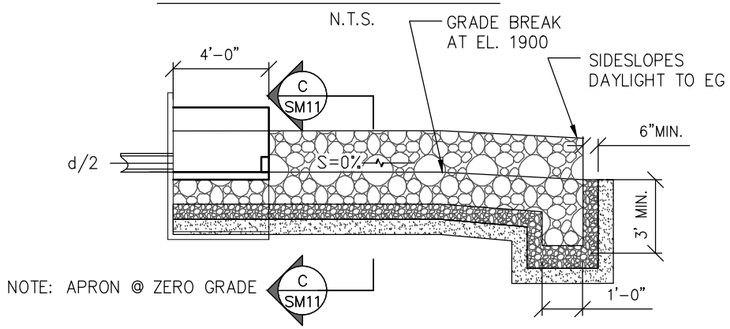


## OUTLET PROFILE (B / SM11)

N.T.S.

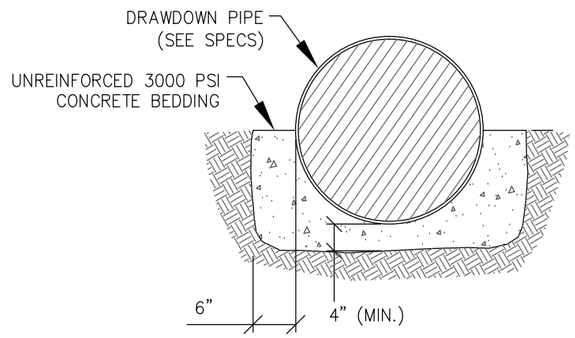


## PIPE BEDDING DETAIL (1 / SM11)

N.T.S.

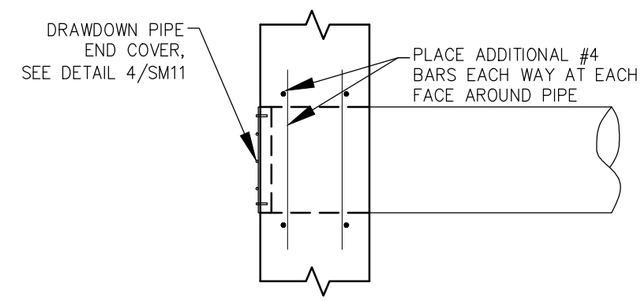


## PIPE WALL PENETRATION (2 / SM11)

N.T.S.

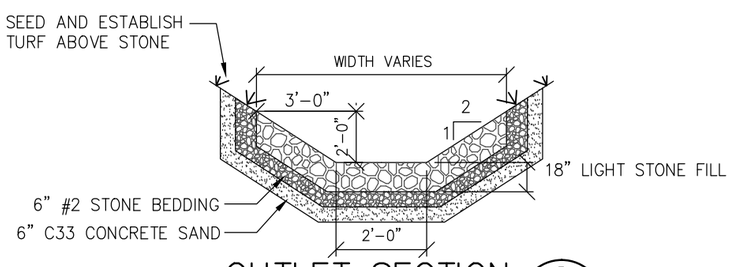


## OUTLET SECTION (C / SM11)

N.T.S.

## RIPRAP OUTLET PROTECTION

DISCHARGE TO AN UNCONFINED SECTION
WITH MINIMUM TAILWATER CONDITION

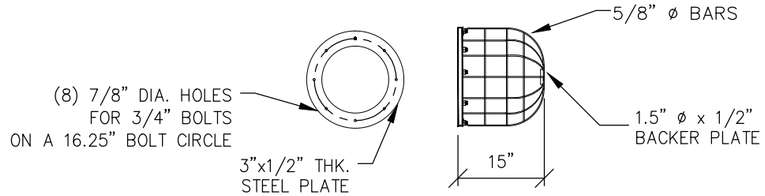


**NOTES:**

1.) LOCATE 8 BARS EVENLY AROUND PLATE; FILLET WELD EACH END OF BAR TO PLATE
2.) TRASH RACK TO BE HOT DIPPED GALVANIZED AFTER FABRICATION

## TRASH RACK DETAIL (3 / SM11)

N.T.S.

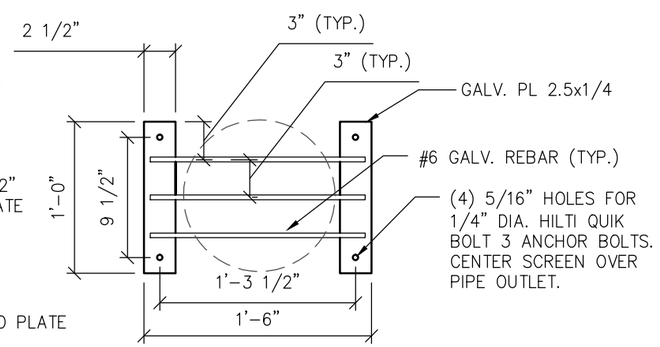


## DRAWDOWN PIPE OUTLET COVER (4 / SM11)

N.T.S.

NYS Department of Environmental Conservation
Bureau of Design & Construction

Belleayre Mtn. Ski Center UMP
Snowmaking Pond
Proposed Drawdown Details 1of2
NOVEMBER 2012

SM11

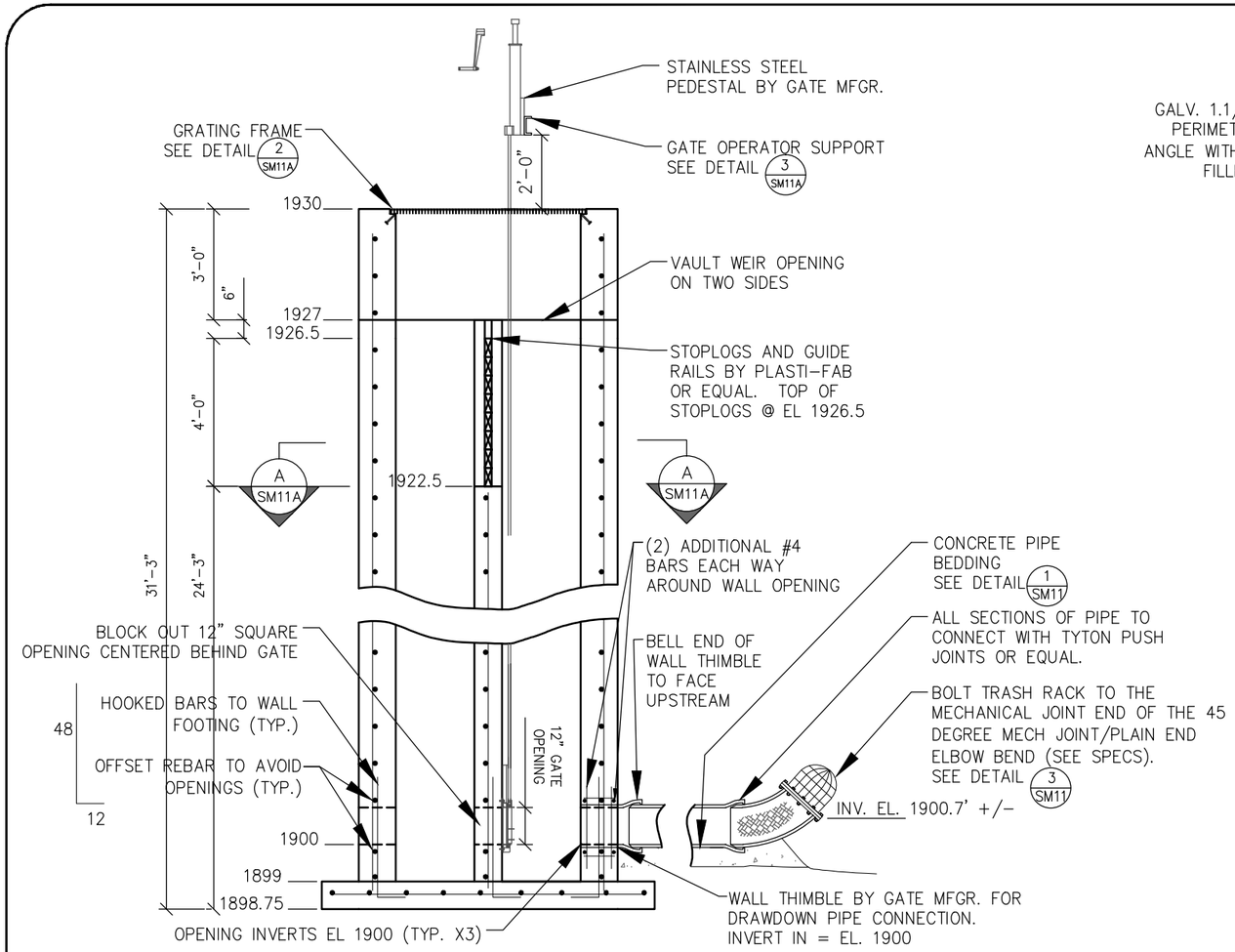


## POND DRAWDOWN VAULT 1 SM11A

SCALE: 1/4"=1'-0"

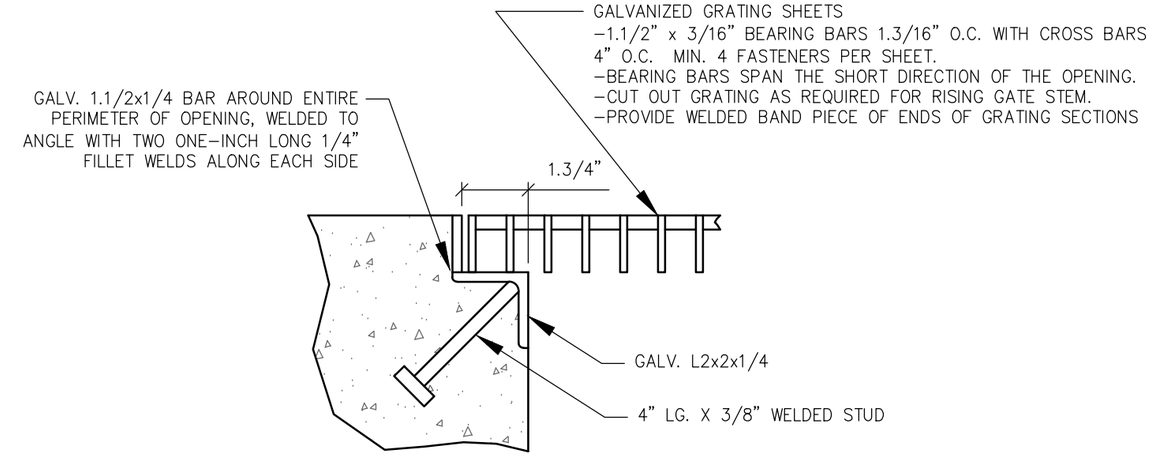


## GRATING FRAME DETAIL 2 SM11A

SCALE: N.T.S.

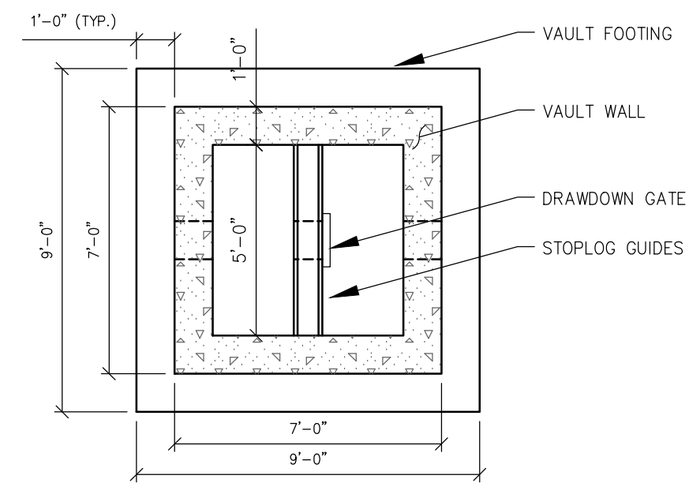


## DRAWDOWN VAULT SECTION A SM11A

SCALE: 1/4"=1'-0"

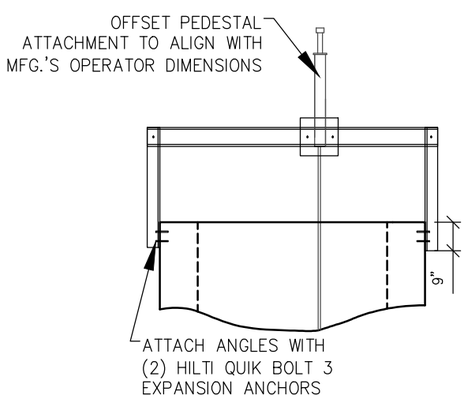


## GATE OPERATOR SUPPORT 3 SM11A

SCALE: 1/4"=1'-0"

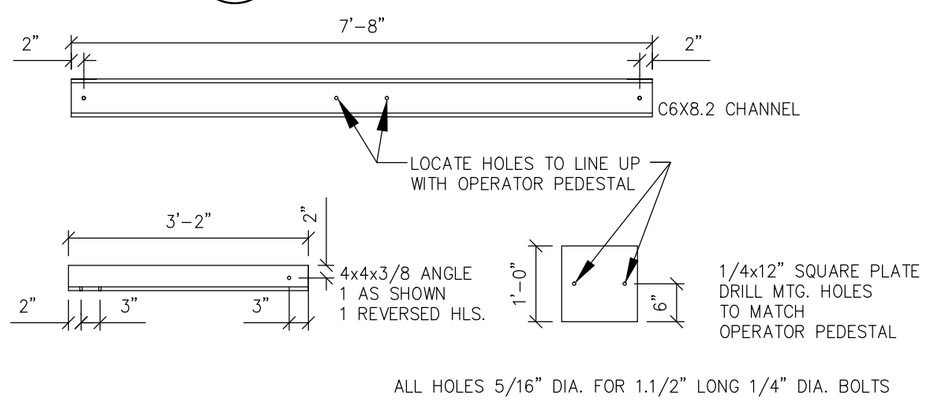


## OPERATOR SUPPORT ASSEMBLY 4 SM11A

SCALE: 1/2"=1'-0"

NYS Department of Environmental Conservation
Bureau of Design & Construction

Belleayre Mtn. Ski Center UMP
Snowmaking Pond
Proposed Drawdown Details 2 of 2
NOVEMBER 2012

SM11A

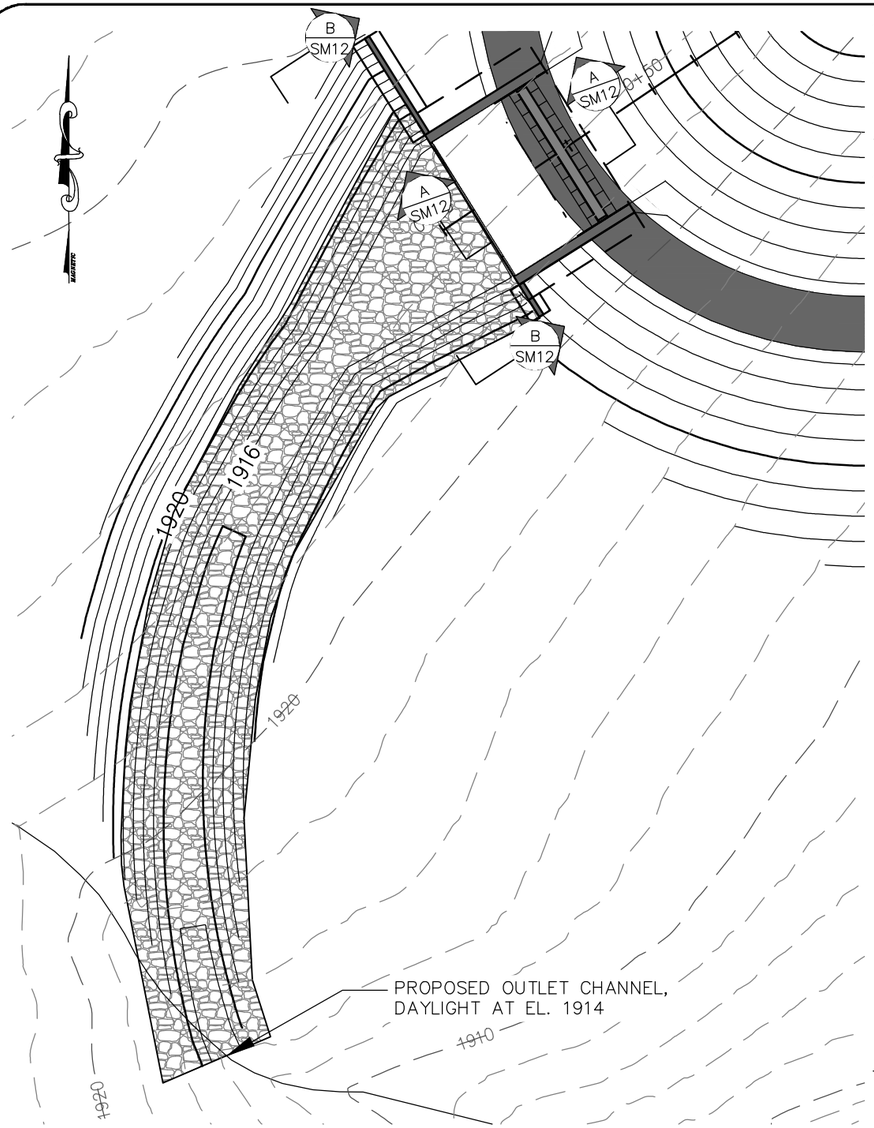


## POND OUTLET SITE PLAN

SCALE: 1"=30'

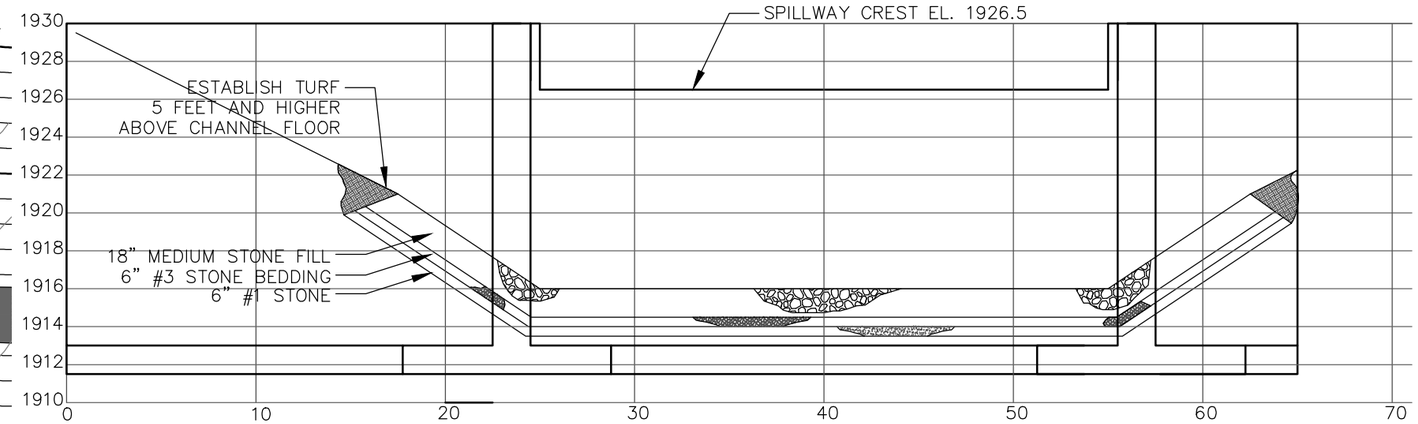


## SPILLWAY D/S SECTION

B
SM12

SCALE: 1.1/2"=1'-0"

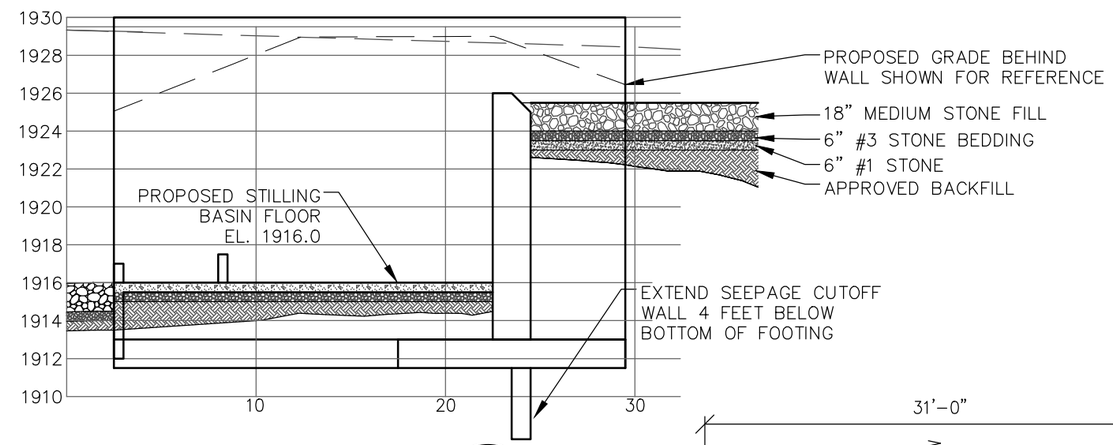


## SPILLWAY SECTION

A
SM12

SCALE: 1.1/2"=1'-0"

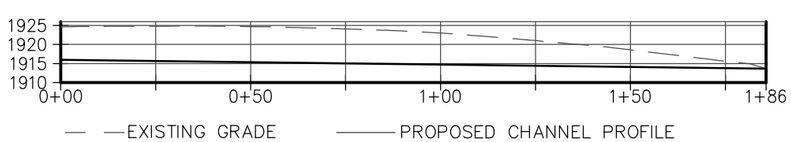


## OUTLET CHANNEL PROFILE

SCALE: 1"=40'

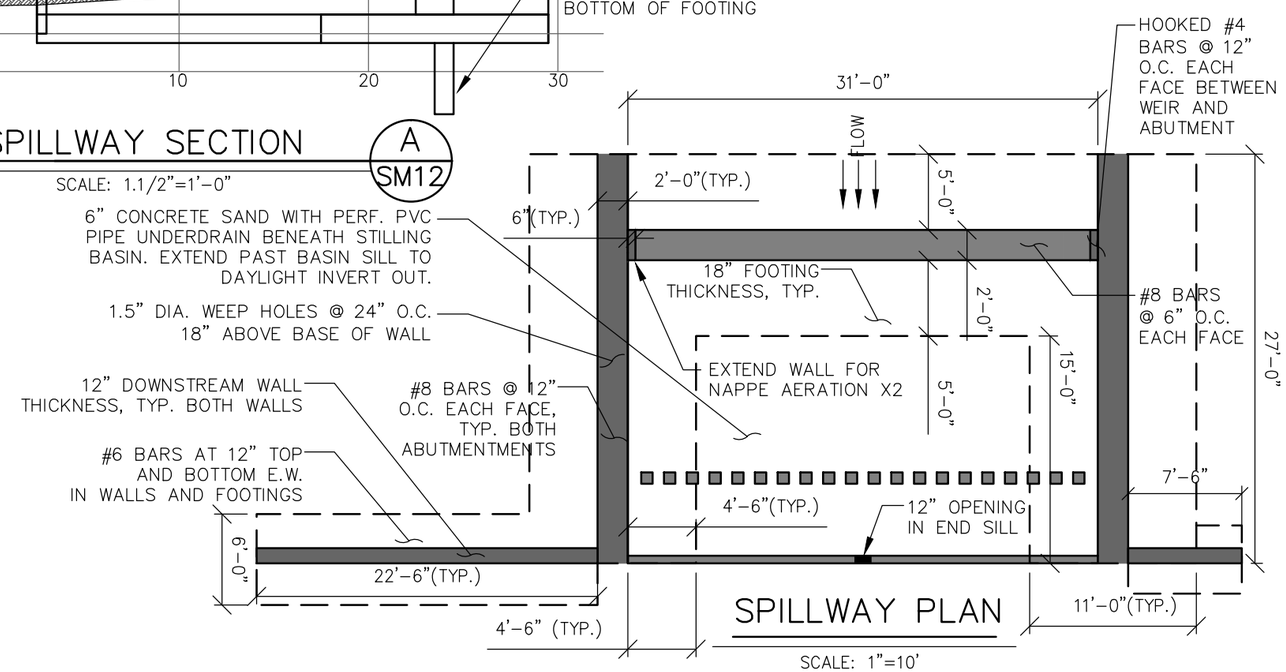


## SPILLWAY PLAN

SCALE: 1"=10'

NYS Department of Environmental Conservation
Bureau of Design & Construction

Belleayre Mtn. Ski Center UMP
Snowmaking Pond
Proposed Spillway Structure
NOVEMBER 2012

SM12

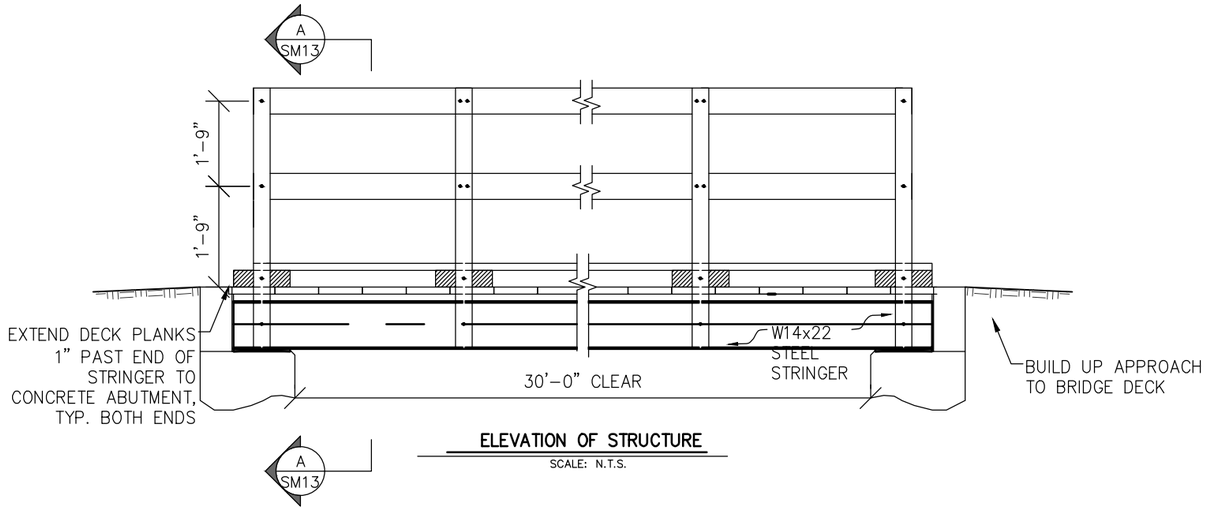


**ELEVATION OF STRUCTURE**
SCALE: N.T.S.

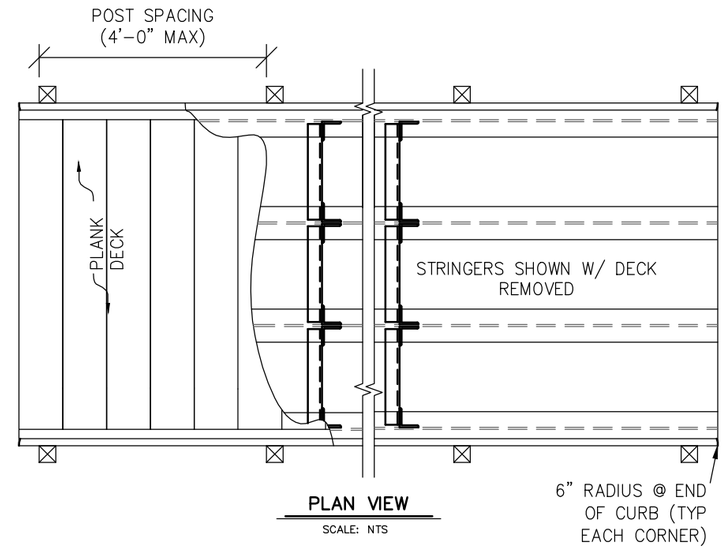


**PLAN VIEW**
SCALE: NTS

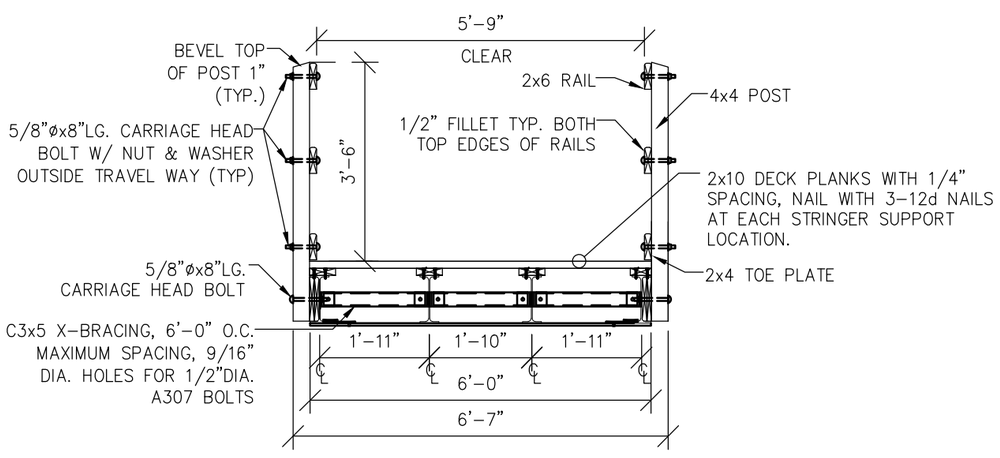


**DECK CROSS SECTION** 1 SM13
SCALE: N.T.S.

**GENERAL NOTES & SPECIFICATIONS**

LOADING

1. Deck Snow Load – NY Code ground snow load 55 PSF.
2. Deck Live Load – 60 PSF.
3. Deflection Criteria – L/240 for DL+LL+Self Weight, L/360 for LL+Self Weight
4. Posts & Rails – Posts & Rails were designed for BOCA Code Pedestrian Load only. Rail is not a guard for vehicular traffic.

**Specifications**

1. National Design Specifications for Wood Construction, 1991 Edition, by National Forest Products Assoc.
3. Parallam Technical Note, Number US-02, CCA Treated Parallam, PSL, February 1991.
4. American Wood Preservers Association Standards, Waterborne Preservative P5 Type A, Standard C2, and Standard C14.
5. American Institute of Steel Construction Manual, 13th Edition, December 2005.

**Lumber**

1. Lumber for deck, backwall, rail, posts and curbs, shall be No. 2 Non-dense Southern Yellow Pine, ACQ, pressure treated to a retention of 0.60 lbs/cft.
2. Drawings are prepared using S4S finished dimensions. If rough sawn lumber is used adjust dimensions as required.

**Steel**

1. Steel stringers shall conform to Specification Section 05012.2, Plain Steel.
2. Contractor shall submit fabrication drawings stamped by a NYS Licensed Engineer for the approval showing beam, angle and plate welds, weights, locations and dimensions. Angles and steel tabs for stringer bracing shall be UNPAINTED for the surfaces over which they are in contact. Field paint bolted connections after assembly per the manufacturer's recommendations.

**Hardware**

1. All bolts, washers, nuts and miscellaneous metal hardware shall be ASTM A307 hot dipped galvanized unless otherwise specified. Anchors for stringer bearing plates shall be Hilti HY150 Epoxy anchors or equal. Anchor size shall be per the drawings.
2. All Nail pins are to be hot dipped galvanized.

**Approach Rail**

1. New split rail fence along spillway abutments shall be place to meet up with spillway bridge railing at a right angle such that no gaps exist between the two.

**Construction**

1. Bearing plates shall be placed on the spillway abutment walls. Walls shall be free from compressible organic material before placement.
2. Deck planks shall be laid heart side down.
3. Treat all field fabrications, drilling, cuts and abrasions by soaking or brushing 3 coats of approved preservative.

NYS Department of Environmental Conservation
Bureau of Design & Construction

Belleayre Mtn. Ski Center UMP
Snowmaking Pond
Spillway Bridge
NOVEMBER 2012

SM13