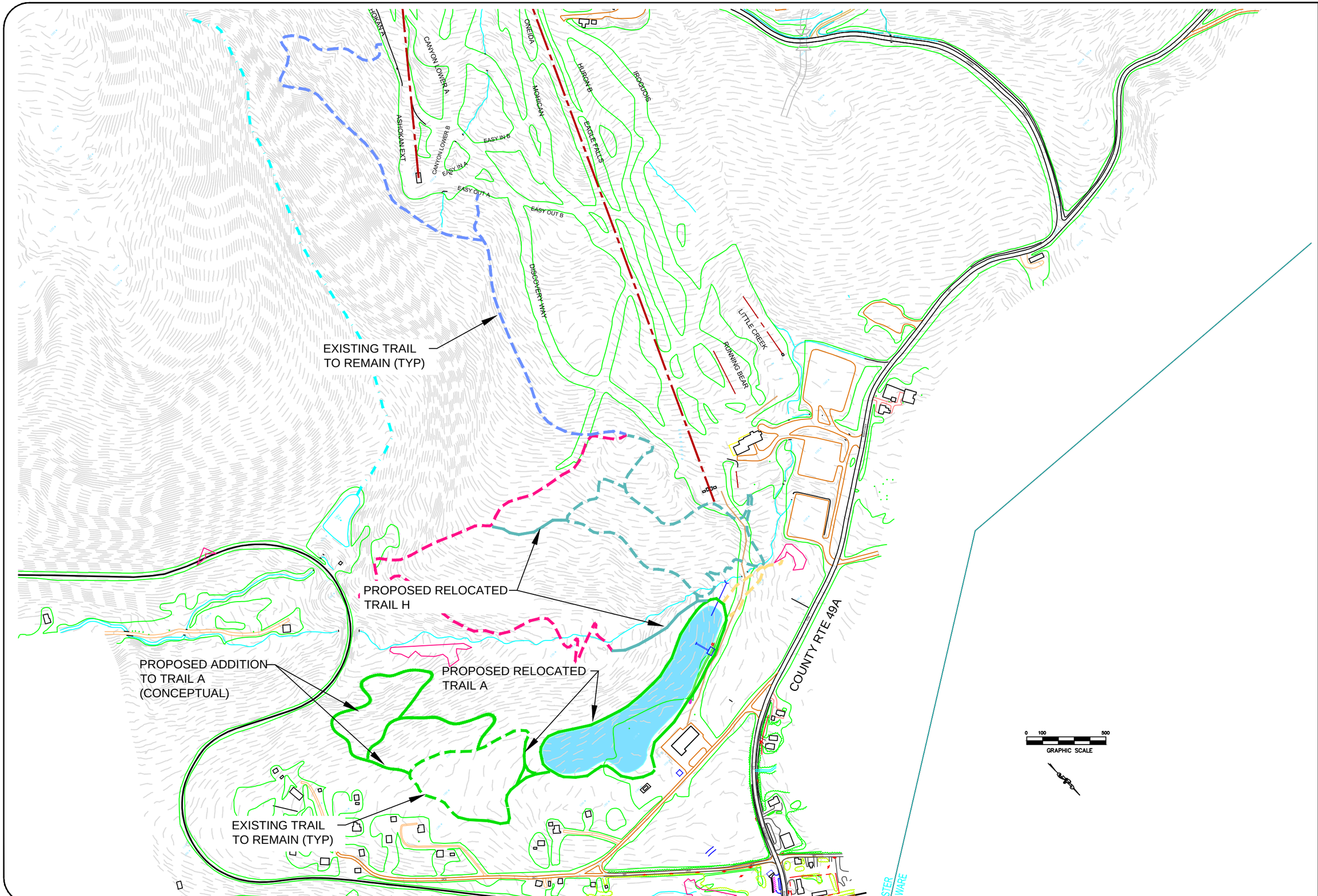

NYS Department of Environmental Conservation
Bureau of Design & Construction

Belleayre Mtn. Ski Center UMP
PROPOSED X-COUNTRY, HIKING &
BIKING TRAILS
NOVEMBER 2012

TR2

P:\Projects\03-2120\UMP Drawings\PR LIFTS AND TRAILS E&SCP.dwg, 12/30/2010 12:28:18 PM, DWG To PDF Bonus Pack.pc3

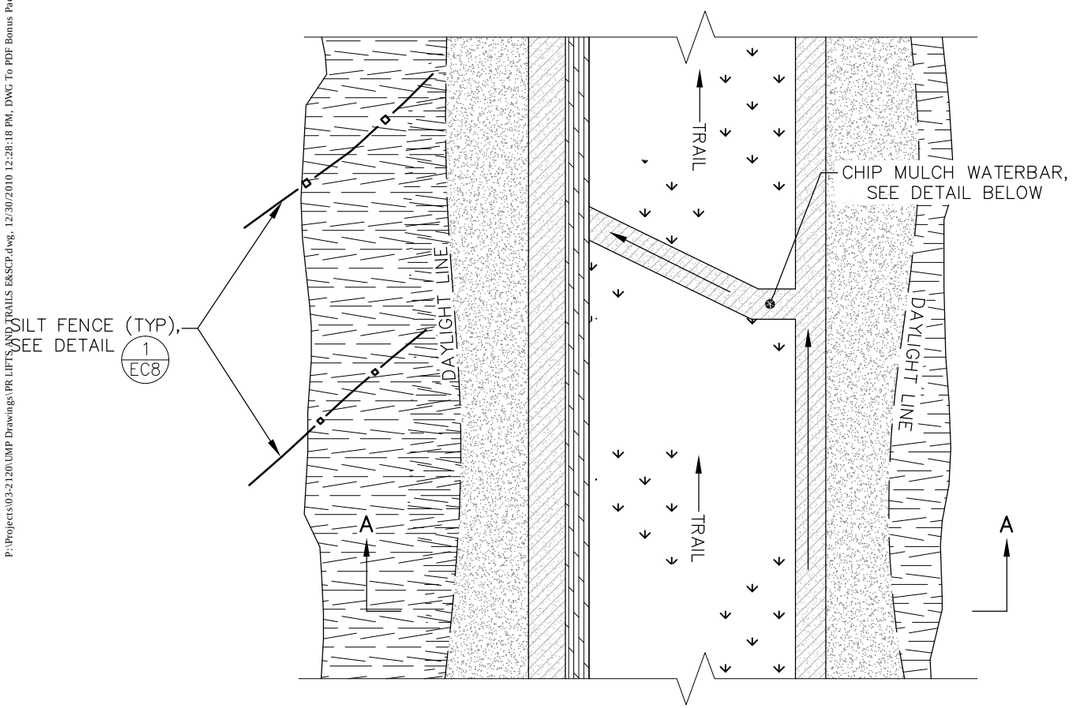

CONSTRUCTED TRAIL PLAN VIEW

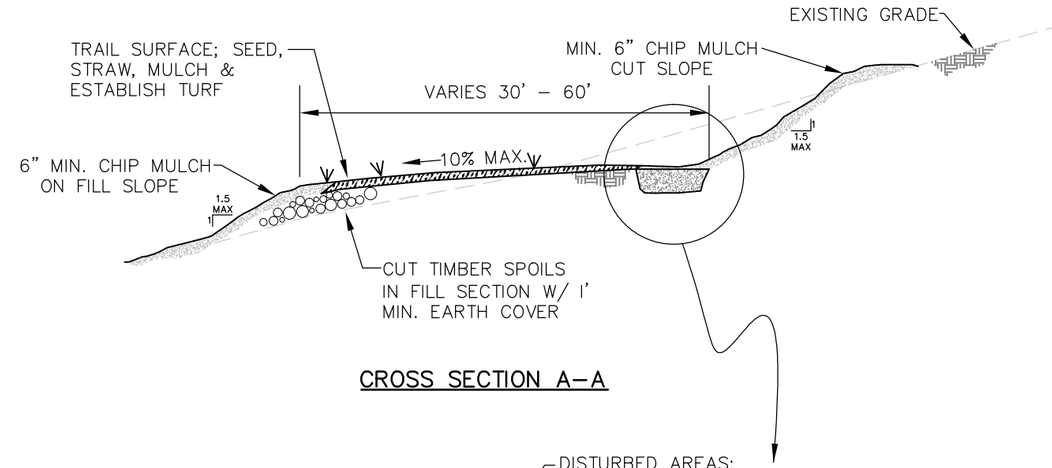

CROSS SECTION A–A

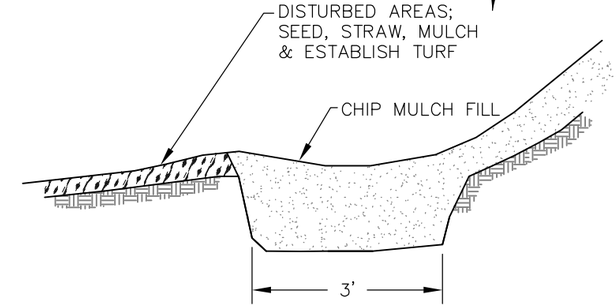

CHIP MULCH WATERBAR DETAIL

CONSTRUCTION SEQUENCING

1. INSTALL SILT FENCE AND/OR WOOD CHIP BERMS BELOW THE TRAIL AS SHOWN ON SITE PLAN.
2. CUT AND CHIP TREES.
   - LIMIT CLEARING TO GENERALLY 100 FEET SECTIONS AT ONE TIME.
   - SPREAD WOOD CHIPS ON TRAIL TO STABILIZE AND FILTER STORMWATER IN DISTURBED AREAS.
3. DIVERT CLEAN RUNOFF FROM THE DISTURBED AREAS AS MUCH AS PRACTICLE BEFORE BEGINNING CUT AND FILL OPERATIONS.
4. GRUB STUMPS WITH WOOD CHIPS REMAINING ON TRAIL AS REQUIRED.
   - LIMIT CUTTING, FILLING AND GRUBBING OPERATIONS TO THE EXENT POSSIBLE. CUT STUMPS FLUSH TO GRADE AND DO NOT GRUB STUMPS WHERE POSSIBLE.
   - ROUTE TRAILS DURING FINAL LAYOUT TO MINIMIZE THESE IMPACTS.
5. SCRAPE AND STOCKPILE TOPSOIL IN CUT AND FILL LOCATIONS.
   - USE EROSION CONTROL PRACTICES WHEN STOCK PILING TOPSOIL, SEE DETAIL 4/EC9.
6. USE LOGS TO CREATE CRIBBING AND TO HELP STABILIZE THE DOWN GRADIANT LIMIT OF THE CROSS TRAIL FILL SECTIONS. SEE CROSS SECTION DETAIL A–A.
7. CONSTRUCT PERMANENT SWALES AND WATER BARS DURING FINAL GRADING.
   - LOCATIONS OF WATERBARS AND SWALES ARE SHOWN ON PLANS. ADJUST SPACING AS REQUIRED BY FIELD CONDITIONS (IE. BEFORE CROSSING EXISTING GRAVEL ACCESS ROADS, AND TOP OF STEEP GRADES).
8. SPREAD TOP SOIL BEFORE SEEDING AND MULCHING.
9. SEED AND MULCH AREAS WHERE FINAL GRADE HAS BEEN ESTABLISHED WITHIN THREE DAYS. NO AREAS SHALL BE LEFT WITH RAW EARTH MORE THAN 10 DAYS.

GENERAL NOTES

1. WHERE NEW TRAILS, OR GRAVEL ROADS REQUIRE THE INTALLATION OF NEW CULVERT PIPE TO CROSS EXISTING DRAINAGE DITCHES, INSTALL STONE INLET AND OUTLET TO DISIPATE VELOCITY AND REDUCE POTENTIAL EROSION OF EXISTING DITCH. SEE DETAIL 3/PK14
2. LIMIT PIPELINE EXCAVATION TO 1200 FEET OF OPEN TRENCH NOT TO EXCEED 10 DAYS. USE PEASTONE CHECK DAMS AT A SPACING OF 300 FEET TO SLOW THE VELOCITY OF WATER THAT MAY ENTER THE TRENCH.

SEED WITH CONSERVATION MIX, SEE CPE&SC APPENDIX H, TOPSOIL & SEED SPECIFICATIONS.

CONSTRUCTION SPECIFICATIONS

1. INSTALL THE WATER BAR AS SOON AS THE TRAIL AREA IS CLEARED AND GRADED.
2. DISK OR STRIP THE SOD FROM THE BASE FOR THE CONSTRUCTED RIDGE BEFORE PLACING FILL.
3. TRACK THE RIDGE TO COMPACT IT TO THE DESIGN CROSS SECTION.
4. THE OUTLET SHALL BE LOCATED ON AN UNDISTURBED AREA. FIELD SPACING WILL BE ADJUSTED TO USE THE MOST STABLE OUTLET AREAS. OUTLET PROTECTION WILL BE PROVIDED WHEN NATURAL AREAS ARE NOT ADEQUATE.
5. VEHICLE CROSSING SHALL BE STABILIZED WITH GRAVEL. EXPOSED AREAS SHALL BE IMMEDIATELY SEEDED AND MULCHED.
6. PERIODICALLY INSPECT WATER BARS FOR EROSION DAMAGE AND SEDIMENT. CHECK OUTLET AREAS AND MAKE REPAIRS AS NEEDED TO RESTORE OPERATION.
7. SPACING OF WATERBARS SHALL BE AS FOLLOWS. (PER NYS E&SC)

SLOPE (%)	SPACING (FT)
< 5	125
5 TO 10	100
10 TO 20	75
20 TO 35	50
>35	25

8. THE POSITIVE GRADE OF THE WATERBAR SHALL NOT EXCEED 2%. A CROSSING ANGLE OF 60 DEGREES IS PREFERRED.
9. WATERBARS SHOULD HAVE STABLE OUTLETS, EITHER NATURAL OR CONSTRUCTED.
10. WHEN SOIL DISTURBANCE ACTIVITIES ARE ONGOING A QUALIFIED INSPECTOR SHALL CONDUCT A SITE INSPECTION ONCE EVERY SEVEN CALENDAR DAYS.

NYS Department of Environmental Conservation
Bureau of Design & Construction

Belleayre Mtn. Ski Center UMP
Proposed Lifts & Trails E&SCP I
JANUARY 2011

TR3

P:\Projects\03-2120\UMP Drawings\PR LIFTS AND TRAILS E&SCP.dwg, 12/30/2010 12:55:56 PM, DWG To PDF Bonus Pack.pc3

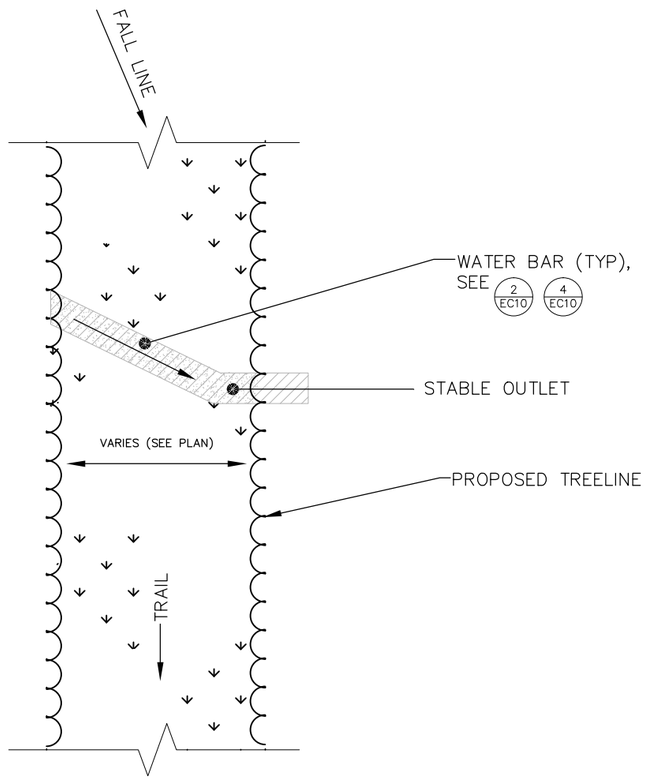

NEW TRAIL EROSION CONTROLS PLAN VIEW

CONSTRUCTION SEQUENCING

1. CUT AND CHIP TREES IN TRAIL AREA.
   - LIMIT CLEARING TO 100 FT. LONG ACTIVE SECTIONS AT ONE TIME.
   - SPREAD WOOD CHIPS TO STABILIZE DISTURBED AREAS.
2. DIVERT RUNOFF FROM THE UPHILL LIMITS OF EXCAVATION AS MUCH AS PRACTICABLE BEFORE BEGINNING CUT AND FILL OPERATIONS.
3. GRUB STUMPS WITH WOOD CHIPS REMAINING ON TRAIL AS REQUIRED.
   - TRAILS WITH 25%–40% GRADE WILL BE CONSIDERED FOR LIMITED OPERATION.
   - ROUTE TRAILS DURING FINAL LAYOUT TO MINIMIZE THESE IMPACTS.
4. SCRAPE AND STOCKPILE TOPSOIL IN CUT & FILL LOCATIONS. SPREAD TOP SOIL BEFORE SEED AND MULCH.
5. SEED AND MULCH AREAS WHERE FINAL GRADE HAS BEEN ESTABLISHED WITHIN THREE DAYS. NO AREAS SHALL BE LEFT WITH RAW EARTH MORE THAN 10 DAYS.

GENERAL NOTES

1. WHERE NEW TRAILS, OR GRAVEL ROADS REQUIRE THE INSTALLATION OF NEW CULVERT PIPE TO CROSS EXISTING DRAINAGE DITCHES, INSTALL STONE INLET AND OUTLET TO DISSIPATE VELOCITY AND REDUCE POTENTIAL EROSION OF EXISTING DITCH. SEE DETAIL 3/PK14
2. LIMIT PIPELINE EXCAVATION TO 1200 FEET OF OPEN TRENCH NOT TO EXCEED 10 DAYS. USE STONE CHECK DAMS AT A SPACING OF 300 FEET TO SLOW THE VELOCITY OF WATER THAT MAY ENTER THE TRENCH.
3. SEED WITH CONSERVATION MIX, SEE CPE&SC APPENDIX H, TOPSOIL & SEED SPECIFICATION.

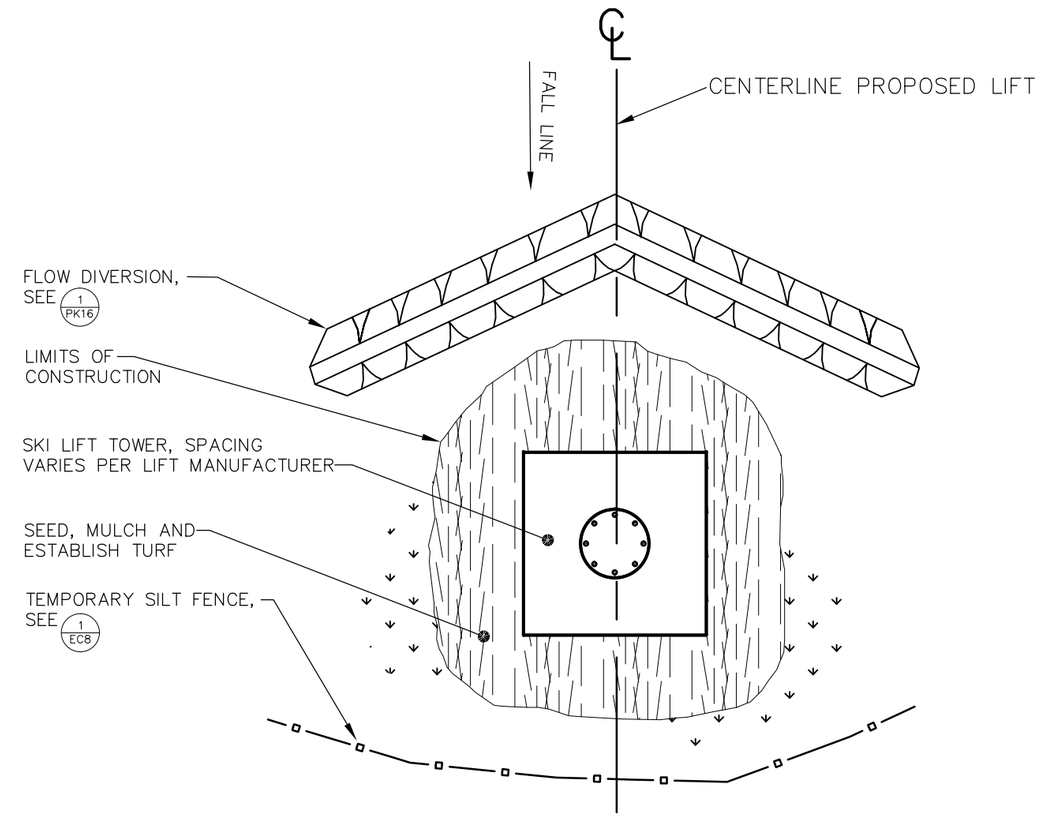

NEW. SKI LIFT TOWER EROSION CONTROLS PLAN VIEW

CONSTRUCTION SEQUENCING

1. INSTALL SILT FENCE AND/OR WOOD CHIP BERMS BELOW THE SKI TOWER FOUNDATIONS. SEE DETAIL 1/EC8
2. SPREAD WOOD CHIPS IN DISTURBED AREA.
3. CONSTRUCT SWALE UPHILL OF WORK AREA TO DIVERT CLEAN RUNOFF FROM THE DISTURBED AREAS AS MUCH AS PRACTICAL.
4. SEED AND MULCH AREAS WHERE FINAL GRADE HAS BEEN ESTABLISHED WITHIN THREE DAYS. NO AREAS SHALL BE LEFT WITH RAW EARTH MORE THAN 10 DAYS.

GENERAL NOTES

1. CLEARING AND GRUBBING FOR THE LIFT CONSTRUCTION WILL FOLLOW E&SC TRAIL CLEARING PLANS.
2. CUT STUMPS AND LEAVE FLUSH WITH GRADE WHERE EXISTING GRADING IS SATISFACTORY AND IN LIFT LINE CLEARING AREAS.
3. REMOVE STUMPS IN AREAS WHERE EXCAVATION IS NEEDED

NYS Department of Environmental Conservation
Bureau of Design & Construction

Belleayre Mtn. Ski Center UMP
Proposed Lifts & Trails E&SCP II
JANUARY 2011

TR4

P:\Projects\03-2120\UMP Drawings\PR HIGHMOUNT CONNECT E&SCP.dwg, 12/28/2010 2:06:29 PM, DWG To PDF Bonus Pack.pc3

NOTE:
THIS CONNECTOR TRAIL IS A TYPICAL "CONSTRUCTED TRAIL" INVOLVING CUT AND FILL IN THE CROSS SECTION. SEE DRAWING TR9–CONSTRUCTED TRAIL DETAILS

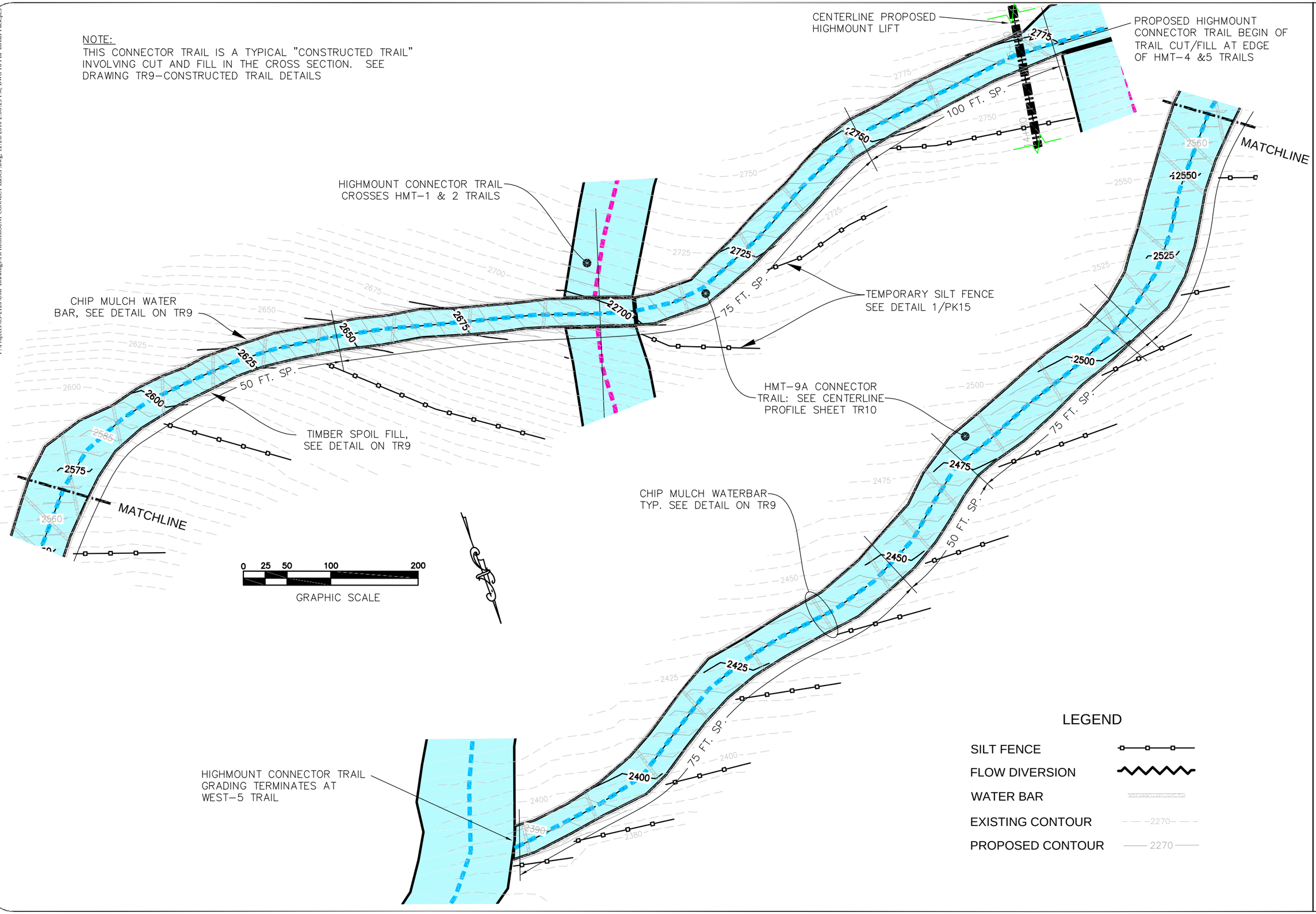

NYS Department of Environmental Conservation
Bureau of Design & Construction

Belleayre Mtn.Ski Center UMP
Proposed Highmount Connector Trail
Grading, E & SCP
JANUARY 2011

TR5

P:\Projects\03-2120\UMP Drawings\PR HIGHMOUNT GRADING.dwg, 12/28/2010 2:10:50 PM, DWG To PDF Bonus Pack.pc3

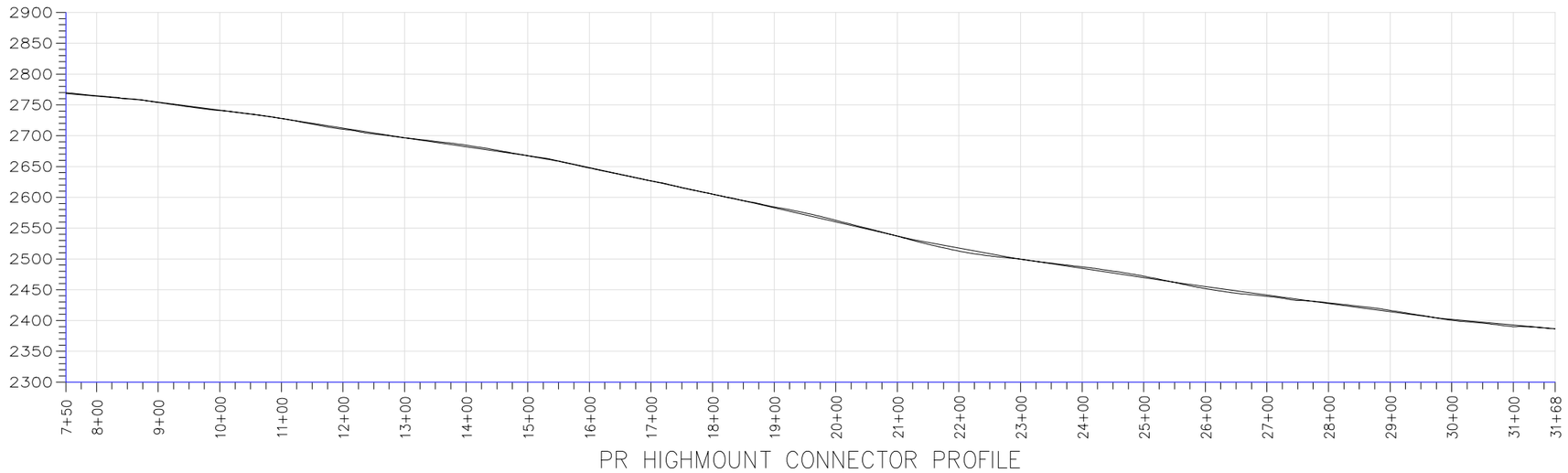

PR HIGHMOUNT CONNECTOR PROFILE

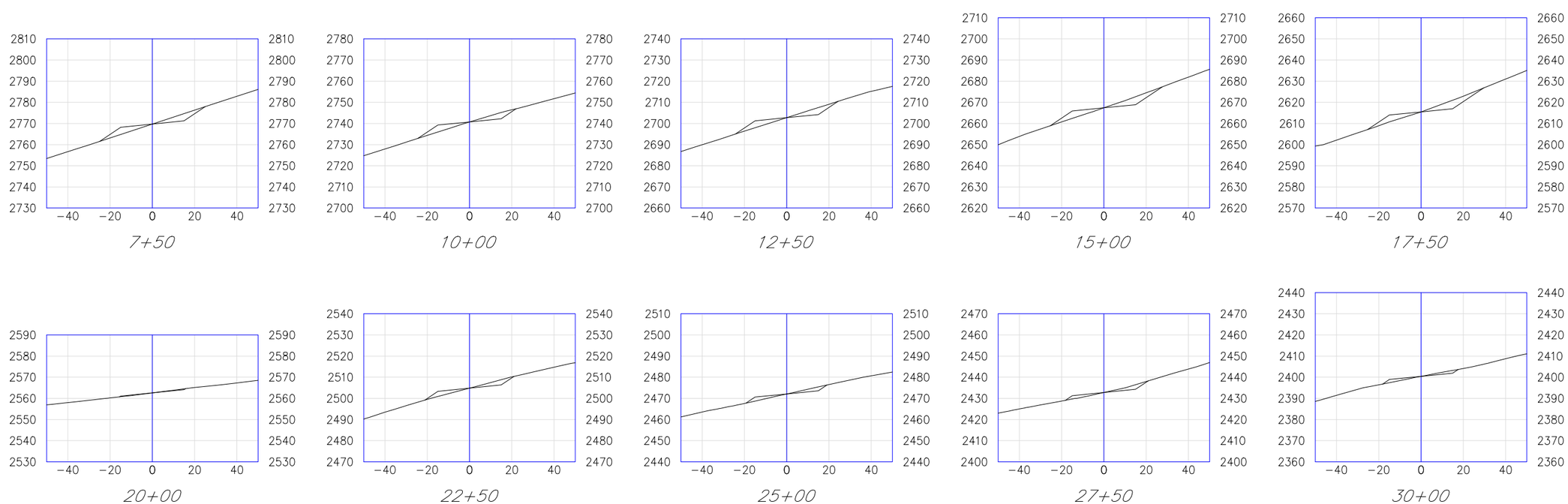

HIGHMOUNT CONNECTOR TRAIL SECTIONS

NYS Department of Environmental Conservation
Bureau of Design & Construction

Belleayre Mtn. Ski Center UMP
Proposed Highmount Connector Trail
Profiles / Sections
JANUARY 2011

TR6

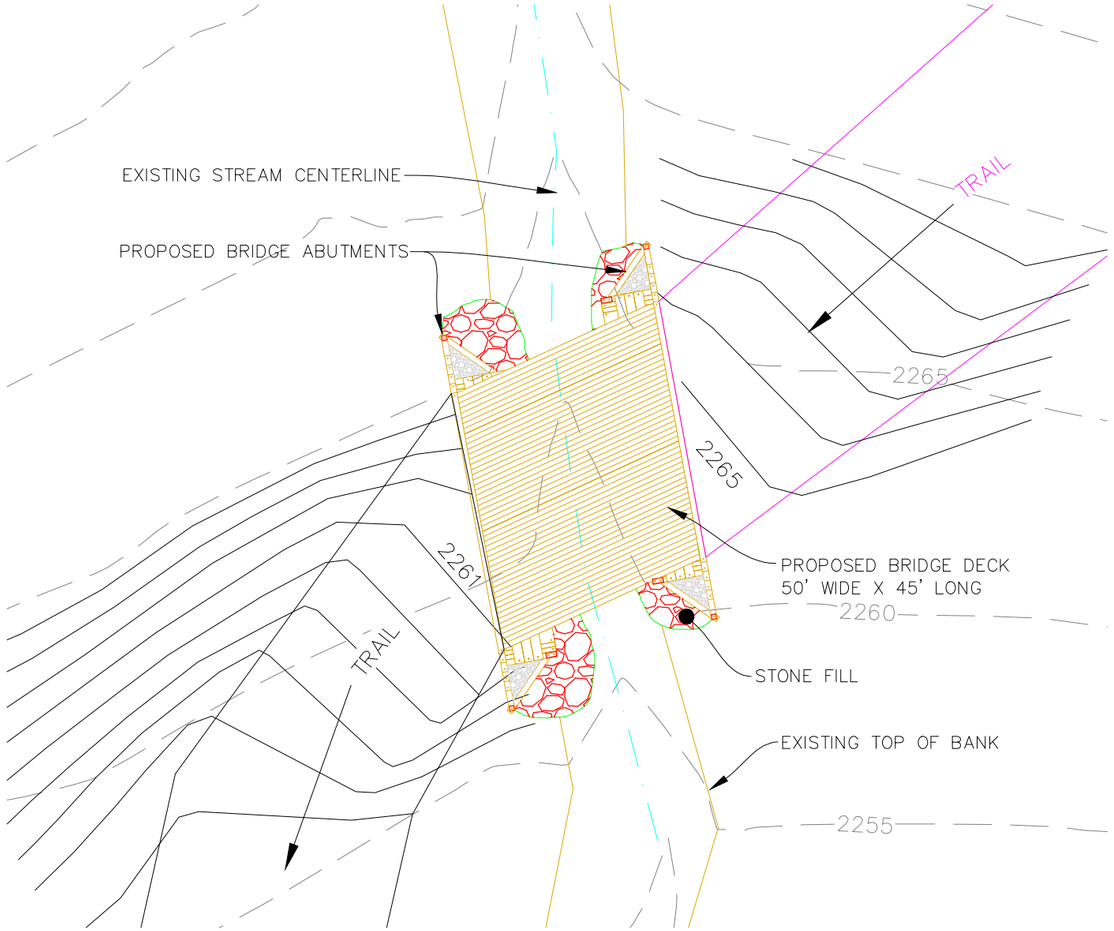

DEER RUN EXTENSION STREAM BRIDGE PLAN

DRAWING N.T.S.

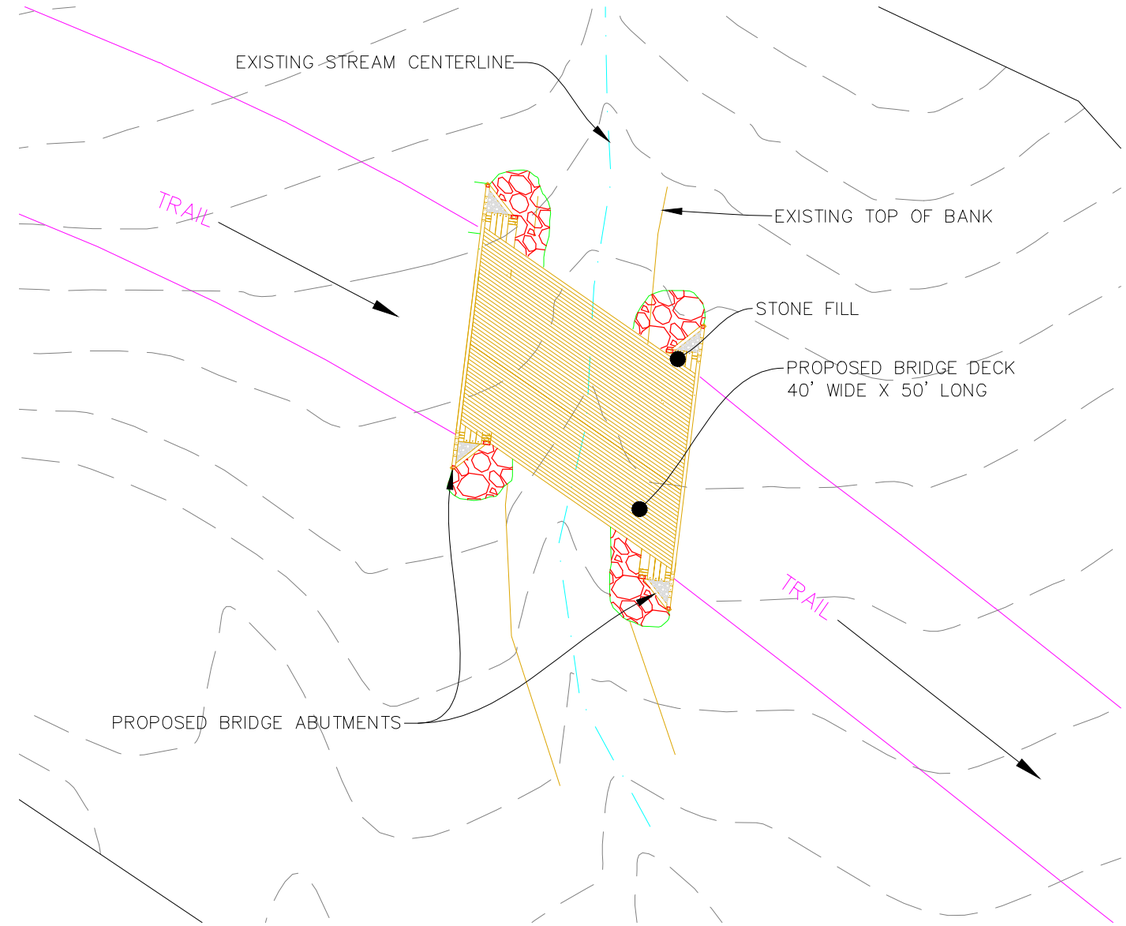

WEST LIFT CONNECTOR STREAM BRIDGE PLAN

DRAWING N.T.S.

CONSTRUCTION NOTES:

1. INSTREAM WORK SHALL OCCUR AFTER JUNE 1 AND BE COMPLETED BEFORE SEPT. 30.
2. IF POSSIBLE WORK SHALL BE ACCOMPLISHED WHEN THERE IS NO FLOW IN THE STREAM.
3. IF NECESSARY, INSTALL A SAND BAG COFFERDAM UPSTREAM OF WORK AND ROUTE STREAM FLOW AROUND THE CONSTUCTION SITE.
4. INSTREAM WORK DURATION SHALL BE MINIMIZED AND SHALL BE COMPLETED WITHIN A 72 HOUR WINDOW.
5. MACHINERY SHALL NOT FORD THE STREAM.
6. INSTALL EROSION AND SEDIMENT CONTROL MEASURES TO AVOID SEDIMENT ENTERING THE STREAM.
7. STABILIZE DISTURBED AREAS BY SEEDING AND MULCHING, OR PLACING STONE FILL AS SOON AS POSSIBLE AFTER STREAM WORK IS DONE.
8. OBTAIN NECESSARY PERMITS BEFORE CONSTRUCTION BEGINS.

NYS Department of Environmental Conservation
Bureau of Design & Construction

Belleayre Mtn. Ski Center UMP
PR Stream Bridge Plans E&SCP

JANUARY 2010

TR7

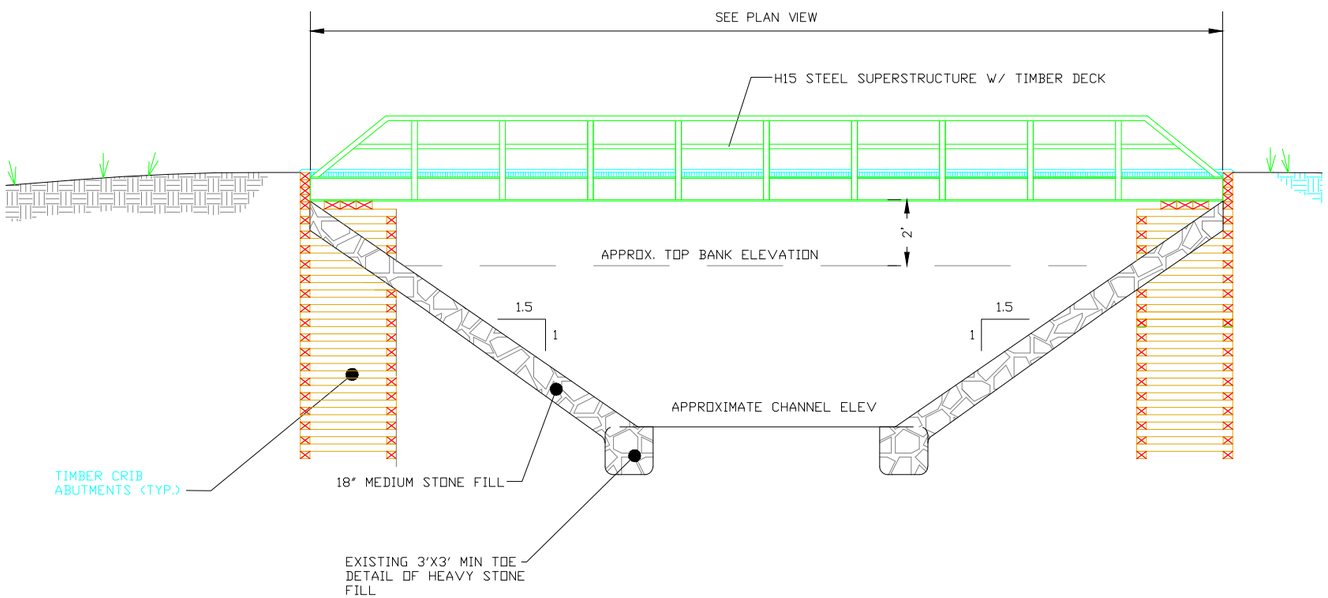

PROFILE VIEW
N.T.S.

NOTE:
SIMILAR STYLE BRIDGE CONSTRUCTED AT
RUSSELL BROOK. FOR INFORMATION ONLY.

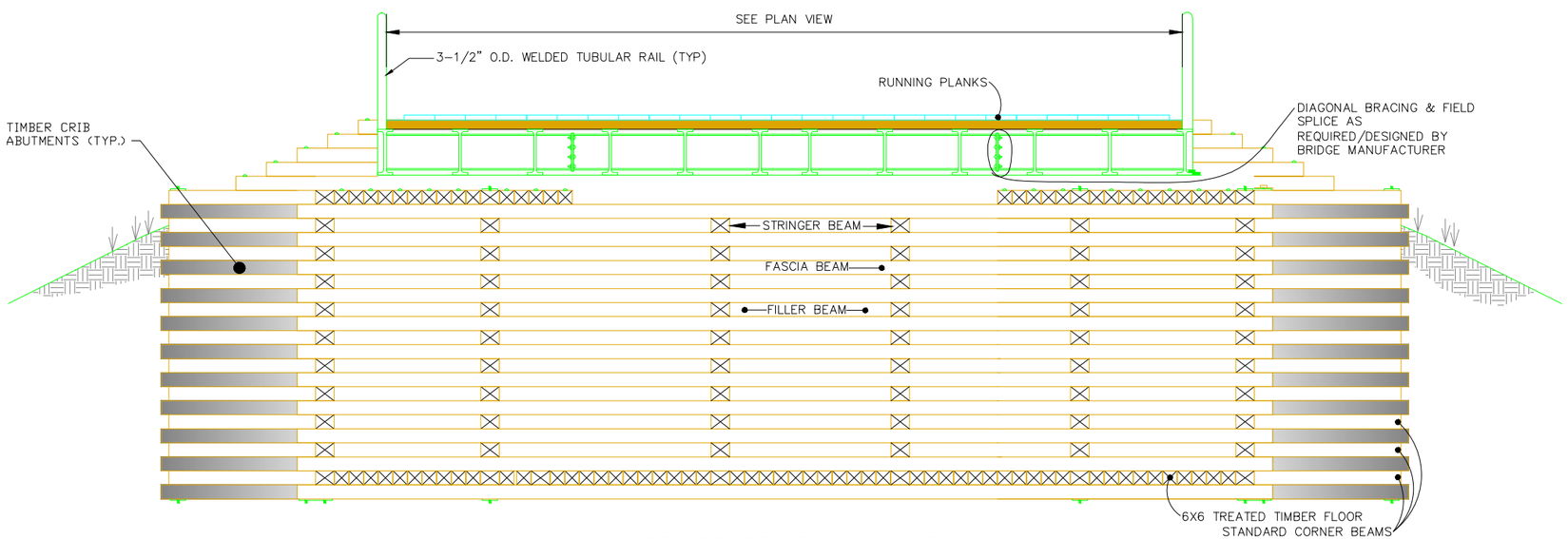

CROSS SECTIONAL VIEW
N.T.S.

NYS Department of Environmental Conservation
Bureau of Design & Construction

Belleayre Mtn. Ski Center UMP
PR Stream Bridge Details
JANUARY 2011

TR8

P:\Projects\03-2120\UMP Drawings\ski over bridge.dwg, 12/30/2010 12:22:56 PM, DWG To PDF Bonus Pack.pc3

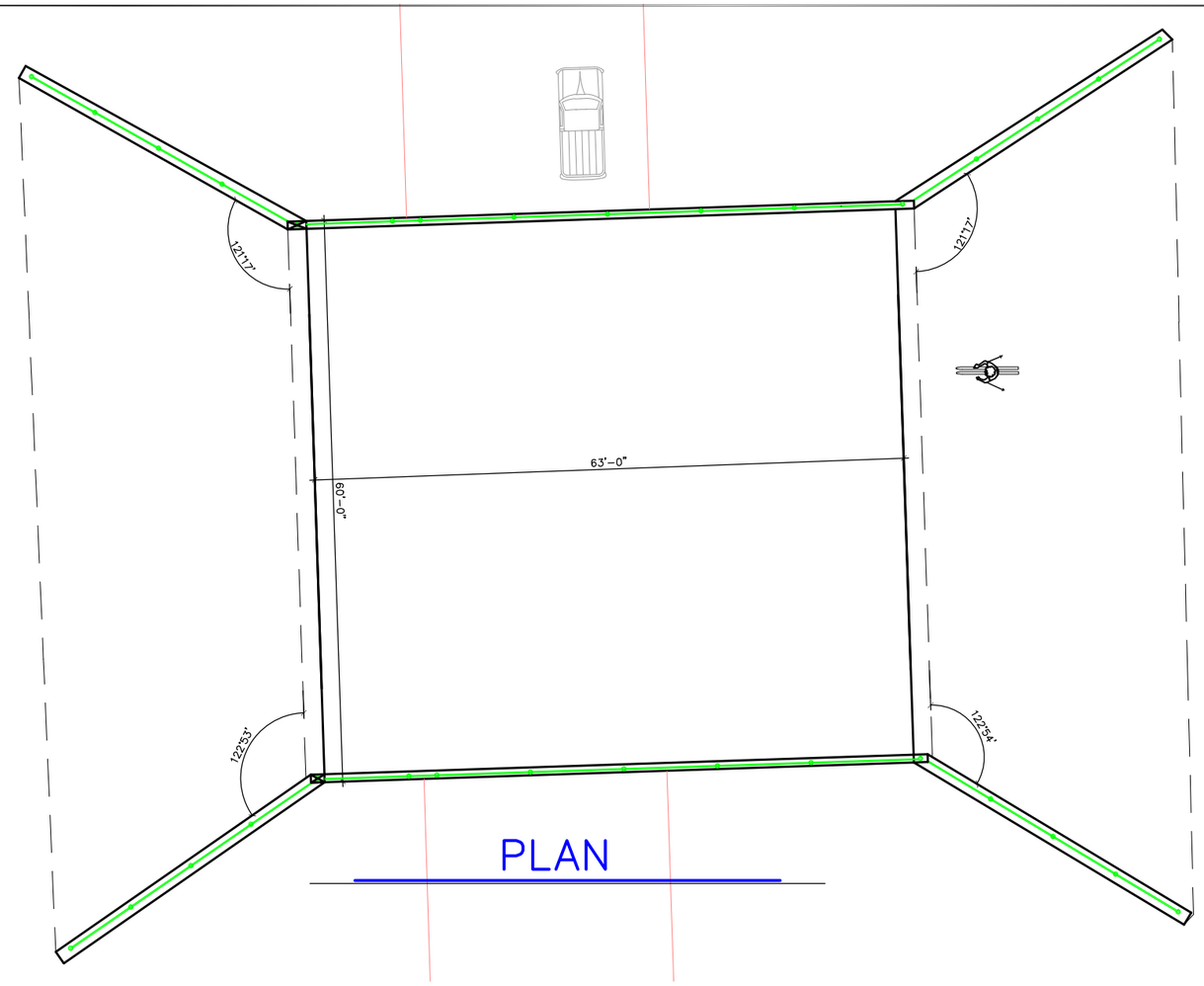

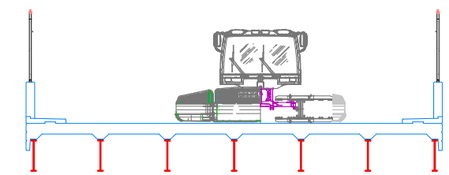

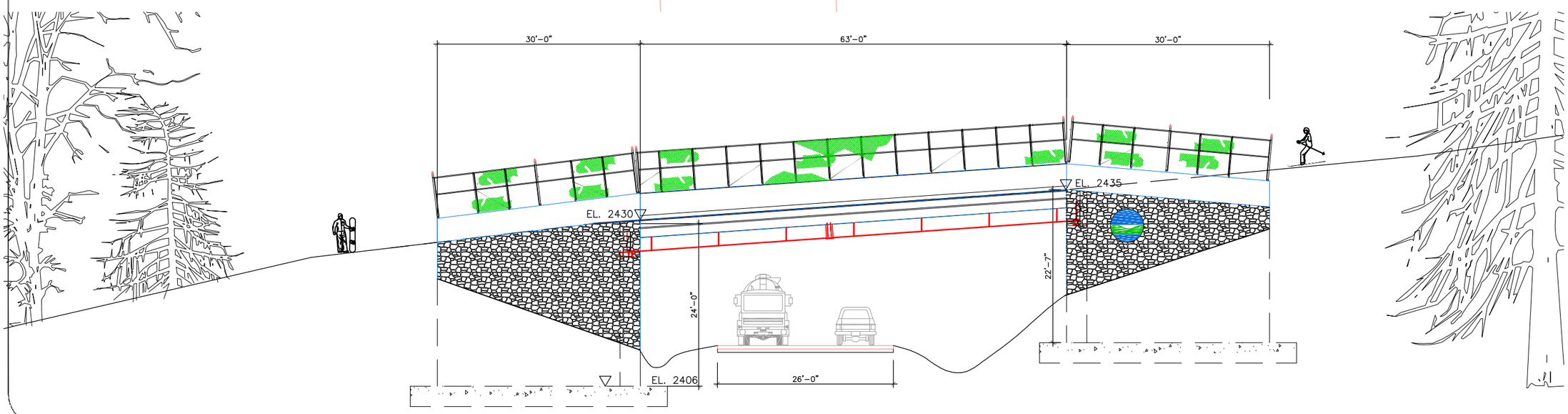

NYS Department of Environmental Conservation
Bureau of Design & Construction

Belleayre Mtn. Ski Center UMP
TOMAHAWK BASE AREA
SKI BRIDGE
JANUARY 2011

TR9

P:\Projects\03-2120\UMP Drawings\PR TOMAHAWK BASE AREA.dwg, 12/30/2010 1:05:41 PM, DWG To PDF Bonus Pack.pc3

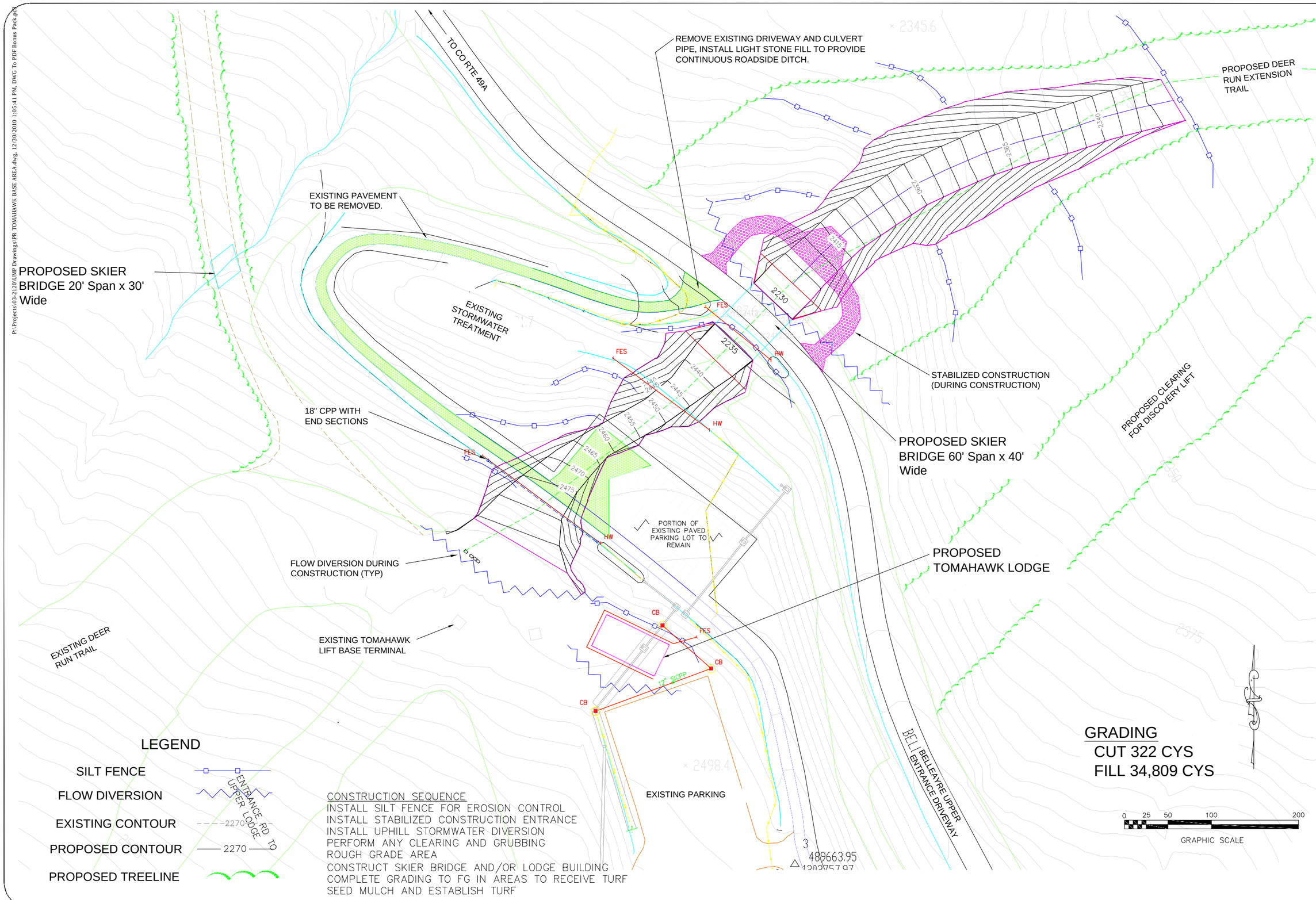

CONSTRUCTION SEQUENCE
INSTALL SILT FENCE FOR EROSION CONTROL
INSTALL STABILIZED CONSTRUCTION ENTRANCE
INSTALL UPHILL STORMWATER DIVERSION
PERFORM ANY CLEARING AND GRUBBING
ROUGH GRADE AREA
CONSTRUCT SKIER BRIDGE AND/OR LODGE BUILDING
COMPLETE GRADING TO FG IN AREAS TO RECEIVE TURF
SEED MULCH AND ESTABLISH TURF

NYS Department of Environmental Conservation
Bureau of Design & Construction

Belleayre Mtn. Ski Center UMP
Proposed Tomahawk Base Area
Grading, Drainage, E&SCP
JANUARY 2011

TR10