BOND SCHOENECK & KING

One Lincoln Center | Syracuse, NY 13202-1355 | bsk.com

KEVIN M. BERNSTEIN, ESQ.
kbernstein@bsk.com
P: 315.218.8329
F: 315.218.8429

March 7, 2014

VIA ELECTRONIC AND FIRST CLASS MAIL

RECEIVED
MAR 10 2014
REGION 8
OFFICE OF GENERAL COUNSEL

Mr. David L. Bimber
Regional Permit Administrator
New York State Department of
Environmental Conservation
Region 7
615 Erie Boulevard West
Syracuse, NY 13204-2400

Re: *Finger Lakes LPG Storage; Proposed LPG Storage Facility; Town of Reading; DEC Facility No. 8-4432-00085; Supplemental Noise Information*

Dear Mr. Bimber:

At the request of the Department, Finger Lakes has further reviewed its noise analysis in light of varying ambient noise measurements taken in connection with the Finger Lakes LPG Storage project and the Arlington Storage Seneca Gallery 2 project. Enclosed is a memorandum prepared by Finger Lakes' noise expert which reconfirms that the proposed equipment for the Finger Lakes project will not result in sound levels that are intrusive to the closest receptor, a motel, and are less than 6 dB(A) greater than existing ambient sound levels.

Based on my discussions with the Department, I am assured that Staff has no further questions or information needs. The Department has all the information it needs to finalize the SEQRA process (where the public comment period closed in November 2011) and issue Finger Lakes its underground storage permit, the application for which was initially submitted in October 2009. The Underground Gas Storage Permit was declared to be complete in August 2011, reflecting the fact that the Department had all the information it needed to meet the requirements of ECL § 23-1301. As such, the permit was required under the law to be issued by the end of November 2011, shortly after the comment period ended. Unfortunately, the Department has not complied with this 90 day requirement (ECL § 23-1301(2)).

Finger Lakes once again implores the Department to comply with the very laws it seeks to enforce every day. Its failure to do so sends the worst possible message, not only to

the regulated community, but to those who would otherwise seek to flout the environmental laws of this State.

Sincerely,

BOND, SCHOENECK & KING, PLLC

Kevin M. Bernstein

Enclosure

cc: Hon. Joseph Martens
Edward McTiernan, Esq.
Marc Gerstman, Esq.
Jennifer Maglienti, Esq.
Peter Briggs
Bradley Field
Paul D'Amato, Esq.
Leo Bracci, Esq.
Lisa Schwartz, Esq.
Scott Sheeley

HUNT

ENGINEERS, ARCHITECTS & LAND SURVEYORS, P.C.
4 COMMERCIAL STREET
SUITE 300
ROCHESTER, NEW YORK
TEL: 585-327-7950
FAX: 585-327-7949

Memorandum

Date: March 7, 2014
To: Kevin Bernstein
Bond, Schoeneck & King

From: Paul Congdon
Project: Finger Lakes LPG Storage
Re: Sound Study Supplement

In the Finger Lakes LPG Storage Project, Finger Lakes LPG Storage, LLC retained the services of HUNT Engineers, Architects & Land Surveyors (HUNT) to perform a noise analysis to meet the requirements of the New York State Department of Environmental Conservation (NYSDEC) noise policy (Assessing and Mitigating Noise Impacts, DEP-00-1, Revised February 2, 2001). A Sound Impact Analysis Report, latest revision of July 2013, was prepared by HUNT to determine any impacts from the proposed LPG storage facility.

On a separate project, the Seneca Gallery 2 Project, Arlington Storage Company, LLC (an affiliate of Finger Lakes LPG Storage, LLC) retained the services of Hoover & Keith (H&K) to perform a noise analysis to meet the requirements of the Federal Energy Regulatory Commission (FERC) application. H&K performed their analysis on August 12, 2013 and filed a summary report dated August 30, 2013.

Both of these reports involved the analysis of potential noise impacts at nearby sensitive receptors, including a nearby motel. The first step in any noise analysis is to determine the ambient or background sound levels. For the Seneca Gallery 2 Project the ambient sound levels at the motel were measured as 42.4 dB(A) and 45.0 dB(A), for day and nighttime periods respectfully. The ambient levels measured during the Finger Lakes LPG Storage Project noise analysis were 61.7 dB(A) and 55.7 dB(A), for day and night time respectfully. The difference between the two (2) measurements can be attributed to measurement location, as well as potential differences in ambient characteristics, due to time period. More specifically, the noise meter utilized in measuring ambient levels by HUNT was located on the road side of the motel. The noise meter utilized by H&K was located on the side of the motel shielded from the road.

To confirm that there will be no negative impacts to the motel as a result of anticipated operations of the Finger Lakes' project, an additional analysis was performed to compare the potential sound sources at the Finger Lakes LPG Storage Project to the lowest measured ambient level of 42.4 dB(A):

Potential Sound Source	Brine Pond Pump	Injector Pump	Combined Sources
Potential Sound Level[1]	81.5 dB(A)	85 dB(A)	86.6 dB(A)
Distance Reduction[2]	26 dB(A)	26 dB(A)	26 dB(A)
Vegetation Reduction[3]	6 dB(A)	6 dB(A)	6 dB(A)
Noise Barrier Reduction[4]	8 dB(A)	8 dB(A)	8 dB(A)
Sound Level at Receptor	41.5 dB(A)	45 dB(A)	46.6 dB(A)
Potential Difference from Ambient	-.9 dB(A)	2.6 dB(A)	4.2 dB(A)

1. As shown on Table 1 in the July 2013 Finger Lakes LPG Storage Sound Study prepared by HUNT.
2. There is approximately 1,000ft between the source and receptor. Using the inverse squares method, this equates to a reduction of 26 dB(A).
3. The NYSDEC Noise Policy recommends a 3-7 dB(A) reduction for a vegetative barrier of 100 feet, there is an existing 500 foot wide thicket of deciduous trees, evergreen trees, and dense brush between the source and receptor. The 6 dB(A) reduction is conservative since it is based on the high density of growth and depth of five (5) times the minimum.
4. The exact construction of the noise barriers is to be determined. The injector pumps will be housed in an aluminum sided building. Depending on space considerations, the barrier for the brine pumps could be made of a wall like material or an earthen berm. Dependent on material and construction, a reduction of over 20 dB(A) can be taken for a noise barrier. At a minimum the proposed equipment will be blocked from the sight line of the receptor. Nevertheless, a conservative 8 dB(A) reduction has only been taken.

In the Finger Lakes LPG Storage report, the calculations were conservative and did not include reductions for vegetation and noise barriers, even though the report noted that such barriers would be used and that the area surrounding the Finger Lakes' plant area is well vegetated. Incorporating these accepted mitigation methods shows that the proposed equipment will not result in sound levels that are intrusive to the motel or its occupants and are less than 6 dB(A) which is the threshold for evaluating further mitigation methods under NYSDEC's Noise Policy.

Sound Study

PREPARED FOR

FINGER LAKES LPG STORAGE, LLC

Proposed Watkins Terminal

NY STATE ROUTE 14

WATKINS GLEN, NY

January, 2011
Revised July 2013

HUNT

Sound Impact Evaluation
Proposed Watkins Gas Storage Facility
Finger Lakes LPG Storage, LLC

January 2011
Revised July 2013

Introduction

Finger Lakes LPG Storage, LLC has proposed a new gas storage facility located on New York State Routes 14 and 14A in Watkins Glen, Schuyler County, New York. As part of the approval process a Sound Impact Evaluation was requested. The sound analysis consisted of evaluating the impact sound from equipment would have on various receptors near the proposed site. The evaluation followed the recommended procedure as stated in the NYSDEC's Program Policy DEP-00-1, Assessing and Mitigating Noise Impacts (NYSDEC Noise Policy), First Level Noise Impact analysis.

Evaluation Procedure

In order to adequately evaluate the impact, the noise generation from the proposed equipment had to be determined. The NYSDEC recommends that the level of noise generation be obtained from the equipment manufacturer specifications, or by measuring existing similar equipment (NYSDEC Noise Policy p. 17). At the proposed site there is potential for adverse noise impacts from truck and rail unloading activities, gas injection pumps, brine injection pumps and emergency fire pumps. The location of the proposed activities and equipment can be seen in the attached figures 1 and 2.

For the gas loading and unloading process, measurements were taken from a similar facility located in Savona, New York, owned by Inergy Midstream, parent company of Finger Lakes LPG Storage. In considering the various activities on site, the noise produced by the train engine moving around tank cars has the greatest possibility for an impact to day time ambient levels. This activity would occur daily for approximately 2 hours during the afternoon. The rest of the site activities include truck movements and pumps, which will sometimes operate during the night. In order to correctly measure these sounds, levels were obtained from the existing facility during all processes.

For evaluating the noise impact associated with proposed equipment, manufacturer's specified data was used (See Appendix C). The proposed sound levels were then compared to ambient sound levels measured at various receptor locations at the proposed site.

Existing Site Sound Measurement

On January 5th, 2011, HUNT staff visited the Savona, New York site to take sound level measurements of the entire railroad car exchange. Sounds levels were taken from 10:00am to 12:30pm. During this time, activities were occurring including unloaded train engine movements, maneuvering of tank cars and coupling of tank cars. On May 12th, 2011 HUNT staff revisited the Savona site to take measurements of the truck and compressor noise production. The levels were measured using a handheld noise meter (EXTECH INSTRUMENTS Digital Sound Level Meter model 407736), the meter was set for slow response on the "A" Setting. The meter was placed at 4.5 feet off of the ground pointed towards the noise source, at a distance of 50 feet and 800 feet. The meter was covered by the provided wind screen. The weather was overcast with minor flurries, approximately 25 degrees, with an estimated wind speed of 5 mph on January 5th and was approximately 67 degrees, with an estimated wind speed of less than 5 mph on May 12th. These measurements can be seen in Table 1 in Appendix B.

On January 5th, the ambient sound level at the site was measured at 10:00am prior to any train movement activities. The train activities were performed from 10:15am to 12:15pm. The maximum recorded level was 88.9 dB(A) and was caused by the train engine. For the duration for the train activities the equivalent sound level was 76.1 dB(A).

On May 12th, the ambient sound level at the site was measured at 8:00am prior to any train movement activities. The truck activities were performed from 8:30 am to 9:00am. The truck noise consisted of primarily idling, braking, and back up alarms. The truck noise had an average sound level of 71.3 dB(A) and a maximum of 79.2 dB(A) The compressor sound was measured from 9:10am to 9:40am and had an average sound level of 73.6 dB(A) and a maximum of 77.8 dB(A).

These levels are an accurate representation of the noise generated from the equipment because the difference between the maximum and the ambient is greater than 10 dB. As described in the NYSDEC Noise Policy, differences greater that 10 dB between sounds will result in there being no additive effect to the larger of the sounds. In assessing the noise impact at the proposed Finger Lakes site, the average sound levels created and the maximum sound level will be used.

Future Site Sound measurement

On May 12th, 2011 HUNT staff visited the proposed site for the future gas storage facility to take ambient sound levels for daytime and nighttime. Sound levels were measured at 7 receptor locations, 5 at the truck and rail loading facility, and 2 near the pumping locations. These receptor locations are shown on Figures 1 and 2 in Appendix A. The levels were measured using a handheld noise meter (EXTECH INSTRUMENTS Digital Sound Level Meter model 407736), the meter was set for slow response on the "A" Setting. The meter was placed at 4.5 feet off of the ground. The meter was covered with the provided wind screen. The weather was

clear, approximately 75 degrees, with an estimated wind speed of 5 mph. These measurements can be seen in table 2 in Appendix B.

For the daytime, the sound levels were recorded at all of the receptor locations to gain perspective of the ambient sound levels throughout the proposed area. These locations included residences, property borders, a hotel and a cemetery, which are shown on the attached mapping. It was found that the average sound levels ranged from 54.0-63.1 dB(A), and the maximum sound levels were 73.9-85.0 dB(A). The higher measurements were found near the highways as a result of moderate traffic flow including some larger semi-trucks.

For the night time analysis ambient levels were taken at Receptors #1 and #6. The measured levels were then used to estimate the levels at the remaining receptors. At receptor #1 the ambient night time levels was found to be a decrease of 1.2 dB(A) over the day time level. Although the traffic levels decreased, natural sounds such as crickets and tree frogs limited the decrease in sound levels. This decrease was applied to receptors #2-#5 as an estimate, due to similar environmental characteristics. At Receptor #6 the nighttime levels had a decrease of 6.0 dB(A). This was the result of a significant decrease in traffic. This decrease was applied to Receptor #7, due to similar environmental characteristics.

Sound Impact Evaluation

In order to evaluate the effect the sound will have on the receptor locations, the NYSDEC Noise Policy recommends using the inverse square method. Using this method the sound level is decreased by 6 db for every time the distance from the sound source is doubled, greater than 50 feet, this is demonstrated in Graph 1 (contained in Appendix B). At each receptor location the effective sound was calculated and compared to the ambient sound levels. This data for the resulting sound levels can be seen in Table 3 in Appendix B.

During the day time hours the biggest cause for concern is the train noise. However, as shown on the attached Table 3, the equivalent noise levels produced by the train would have no adverse impacts towards the ambient noise levels at receptors #1, #3 and #4. The levels that would be seen at Receptor #2 and #5 exceed the ambient level by less than 5 dB. According to the NYSDEC Noise Policy, sound level increases of 0-5 dB can be unnoticeable to tolerable. Maximum levels will be noticeable at the receptors; however they do not exceed the existing maximum levels. It can be expected that maximum levels of sound produced by the train will not have any effect on receptors located more than 800 feet away from the source. This conclusion takes into account the decibel reduction only using the inverse square method and is validated by the measurements taken at the Savona site, seen in Table 1 in Appendix B.

For the night time hours, the facilities would have noise produced by Brine Pump 2, trucks and other pumps. The night time sensitive receptors that could be affected by these activities are Receptors #3, #4 and #5. At these receptor locations there would be no noticeable increase in equivalent sound levels due to the brine pumps. The truck unloading activities could cause an increase in 2 dB to the ambient sound level at Receptor #5 and no noticeable increase

elsewhere. This increase at Receptor #5 would be unnoticeable to tolerable as stated by the NYSDEC. The maximum levels would once again exceed the ambient levels, but would not exceed the existing maximum sound levels from unassociated highway noise.

For Brine Pump 1, the manufacturer specifications give an operational sound level of 81.5 dB. The closest sensitive receptor to the pump is a hotel located 1000 feet away. The sound level perceived at the hotel border would be 55.5 dB using only the reduction allowed under the inverse square method. This is lower than the ambient levels at the hotel during the both the day time and night time hours. This can be expected to not cause any adverse impacts.

The injection pumps could potentially have an impact on both Receptors #6 and #7. As shown in Table 3, the injection pumps would result in a sound level of 58.5 dB at Receptor #6 and 59 dB(A) at Receptor #7. For the cemetery, Receptor #6, this does not exceed the daytime levels and is greater than the night time ambient levels by approximately 1.4 dB(A). At receptor #6 the Injection pumps would result in an increase of 3.3 dB(A) for the night time ambient levels. The increase over the estimated night time level at the hotel does not exceed noise levels to the point of being intrusive. As this is a sensitive receptor, mitigation efforts including a partial enclosure, are proposed to further decrease sound impacts from the injection pumps.

The proposed fire pumps are out of the range for any of the receptor locations. The pumps will have to be located on the shore of Seneca Lake. This is a sensitive location and can be expected to have an ambient sound level of around 50 dB(A). The fire pumps have an operating sound level of 84 dB(A). As they are located directly on the lake shore, and considering the potential for sound to carry over water, this could be objectionable to the lake environment. As a result, an enclosure is proposed as mitigation for this impact. The enclosure will be constructed of sound absorbing material, such as cinder blocks. This would reduce the noise levels to a range that is not objectionable.

Conclusions

At the proposed site, the majority of activities would not cause objectionable increases to the existing ambient sound levels. The injection pumps without consideration for natural attenuation and proposed mitigation could cause noticeable increase in ambient levels. With the proposed building enclosure and berms the noise would be decreased to an unnoticeable level, as an enclosure can result in a decrease of 10 dB(A). The proposed development also has proposed earthen berms at the brine pumps and loading facility. This combined with the natural vegetation of the area can be expected to decrease the sound levels further.

The fire pumps would be located in a position to potentially impact a sensitive area. The mitigation methods identified above will reduce the operating sound to a level that will not increase the ambient sound levels to an objectionable level. In addition, these pumps will only need to be operated in emergency situations and during, twice yearly, testing. The testing periods will be scheduled in the middle of the day to limit any impacts the noise level increase would have on the lake.

It should be noted that the proposed site is located next to a state highway and an operational railroad. The NYSDEC allowable noise limits for heavy motor vehicles permits sound levels up to 90 dB. Also, unassociated railroad traffic could be expected to produce sound levels equal to or exceeding the measured train noise levels. So it can be expected that the site in its current state and the receptors around it will experience sound levels, which exceed the proposed levels, due to highway traffic and railroad activity.

The sound levels have been modeled conservatively and mitigation practices will be incorporated where applicable. With this in mind, it can be concluded that the ambient noise levels will not be increased to an objectionable level, and for the most part will be unnoticeable. To verify that this is a valid conclusion, sound monitoring will be performed at the developed site. The proposed monitoring program can be seen in appendix D.

Appendices

A. Source and Receptor Locations
B. Sound Level Tables and Calculations
C. Manufacturer Specifications for Pumps
D. Developed Site Sound Monitoring

Appendix A
Source and Receptor Locations

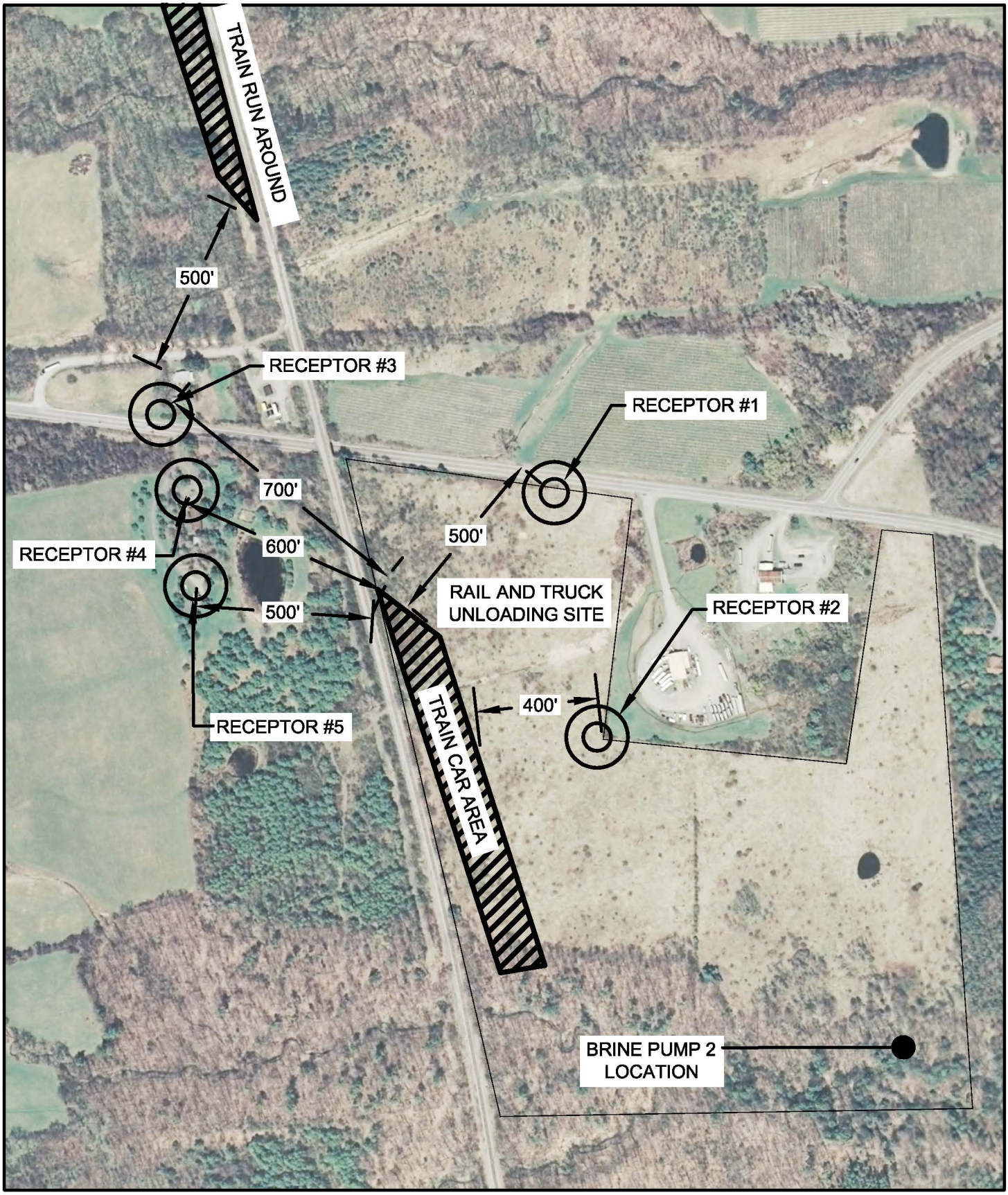

HUNT
607 358 1000
FAX 358 1800
ENGINEERS • ARCHITECTS • SURVEYORS
AIRPORT CORPORATE PARK, 100 HUNT CENTER, HORSEHEADS, N.Y. 14845

RECEPTOR LOCATIONS

PROPOSED GAS STORAGE SITE
STATE ROUTE 14A, WATKINS GLEN
SCHUYLER COUNTY, NEW YORK

1
FIGURE

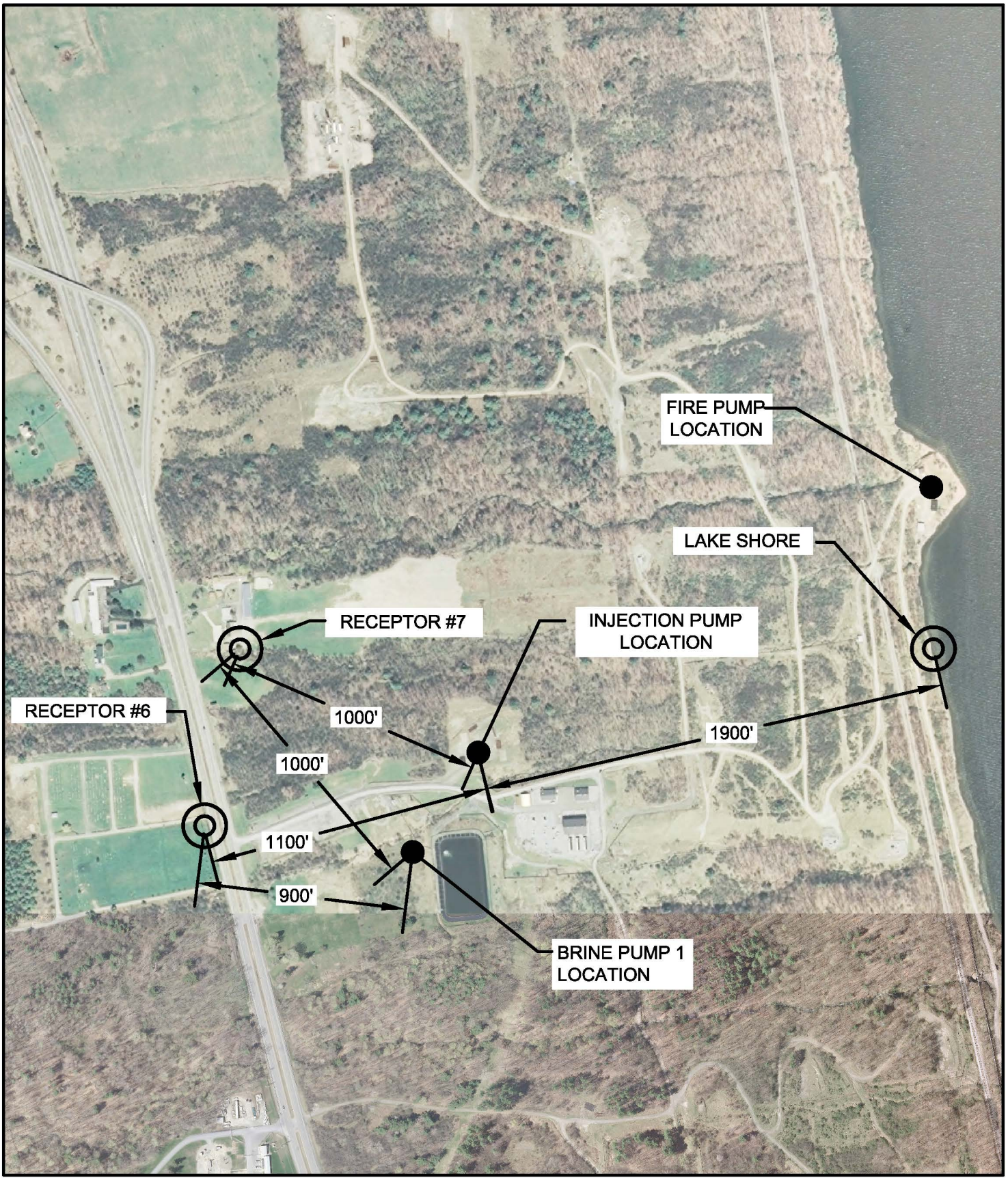

HUNT
607 358 1000
FAX 358 1800
ENGINEERS • ARCHITECTS • SURVEYORS
AIRPORT CORPORATE PARK, 100 HUNT CENTER, HORSEHEADS, N.Y. 14845

RECEPTORS NEAR PUMPS

PROPOSED GAS STORAGE SITE
STATE ROUTE 14A, WATKINS GLEN
SCHUYLER COUNTY, NEW YORK

2
FIGURE

Appendix B
Sound Level Measurements and Calculations

Table 1: Proposed Equipment Sound Levels

Measurements at Existing Site (Savona, NY)

Ambient Sound Level

Time:	10:00am-10:15am
Distance:	50 ft
Leq:	59.0 dB(A)
Lmax:	68.8 dB(A)

Full Car Removal

Time:	10:40am-11:15am
Distance:	50 ft
Leq:	73.8 dB(A)
Lmax:	88.9 dB(A)

Train @ 800 feet

Time:	12:00pm-12:15pm
Distance:	800 ft
Leq:	67.3 dB(A)
Lmax:	76.6 dB(A)

Train Entrance

Time:	10:15am-10:30am
Distance:	50 ft
Leq:	72.4 dB(A)
Lmax:	81.2 dB(A)

Empty Car Placement

Time:	11:15am-11:40am
Distance:	50 ft
Leq:	77.2 dB(A)
Lmax:	87.3 dB(A)

Ambient Sound @ 800 feet

Time:	12:15pm-12:30pm
Distance:	800 ft
Leq:	66.6 dB(A)
Lmax:	74.2 dB(A)

Train Uncoupling

Time:	10:30am-10:40am
Distance:	50 ft
Leq:	78.8 dB(A)
Lmax:	87.9 dB(A)

Coupling Air Release

Time:	11:40am-11:55am
Distance:	50 ft
Leq:	77.2 dB(A)
Lmax:	87 dB(A)

Total Train Time @ 50 feet

Time:	10:00am-11:55am
Distance:	50 ft
Leq:	76.1 dB(A)
Lmax:	88.9 dB(A)

Ambient (on 5/12/11)

Time:	8:00am-8:20am
Distance:	50 ft
Leq:	57.2 dB(A)
Lmax:	69.2 dB(A)

Trucks (on 5/12/11)

Time:	8:30am-9:00am
Distance:	50 ft
Leq:	71.3 dB(A)
Lmax:	79.2 dB(A)

Unloading Units (on 5/12/11)

Time:	9:10am-9:40am
Distance:	50 ft
Leq:	73.6 dB(A)
Lmax:	77.8 dB(A)

Equipment Specifications

Equipment	**Lmax**
Hydroflow 75HP Vertical Turbine Pump (Truck Loading Pump)	75 dB(A)
Teco Westinghouse 700 HP 3600 2810S (Injector Pump)	85 dB(A)
Goulds Pumps Model 3196 Mti 40 HP (Brine Pump)	81.5 dB(A)
Fire Pumps	84 dB(A)

Leq- Average sound level for duration of measurements

Lmax - Maximum sound level that occurred during the measurement period

Table 2: Ambient Levels at Proposed Site (Watkins Glen, NY)

Daytime

Receptor #1
Property Line By 14A

Time:	11:00am-12:00pm
Distance:	500 ft
Leq:	58.1 dB(A)
Lmax:	83.2 dB(A)

Receptor #2
Property Line by Truck Co.

Time:	12:05pm-1:05pm
Distance:	400 ft
Leq:	54.0 dB(A)
Lmax:	73.9 dB(A)

Receptor #3
Residence

Time:	1:15pm-2:15pm
Distance:	700 ft/500ft
Leq:	60.4 dB(A)
Lmax:	85.0 dB(A)

Receptor #4
Residence

Time:	2:25pm-3:25pm
Distance:	600 ft
Leq:	58.0 dB(A)
Lmax:	81.7 dB(A)

Receptor #5
Residence

Time:	3:30pm-4:30pm
Distance:	500 ft
Leq:	54.5 dB(A)
Lmax:	74.5 dB(A)

Receptor #6
Cemetery

Time:	4:40pm-5:40pm
Distance:	1100 ft
Leq:	63.1dB(A)
Lmax:	80.4 dB(A)

Receptor #7
Hotel

Time:	5:50pm-6:50pm
Distance:	1200/1000 ft
Leq:	61.7 dB(A)
Lmax:	81.4 dB(A)

Nighttime

Receptor #1
Property Line by Road

Time:	8:30pm-9:30pm
Distance:	500 ft
Leq:	56.9 dB(A)
Lmax:	86.8 dB(A)

Receptor #2
Property Line by Truck Co.

Time:	Estimated
Distance:	400 ft
Leq:	52.8 dB(A)
Lmax:	NA

Receptor #3
Residence

Time:	Estimated
Distance:	700 ft
Leq:	59.2 dB(A)
Lmax:	NA

Receptor #4
Residence

Time:	Estimated
Distance:	600 ft
Leq:	56.8 dB(A)
Lmax:	NA

Receptor #5
Residence

Time:	Estimated
Distance:	500 ft
Leq:	53.3 dB(A)
Lmax:	NA

Receptor #6
Cemetery

Time:	9:40pm-10:40pm
Distance:	1100 ft
Leq:	57.1 dB(A)
Lmax:	78.3 dB(A)

Receptor #7
Hotel

Time:	Estimated
Distance:	1200/1000 ft
Leq:	55.7 dB
Lmax:	NA

Leq- Ambient Sound Level from average measured sound level
Lmax - Maximum measured sound level

Table 3: Sound Levels Resulting From Equipment (Without Mitigation)

Sound From Train (Day)

Receptor #1

Property Line by 14A

Sound Decrease	20 dB(A)
Leq:	56.1 dB(A)
Lmax:	68.9 dB(A)

Receptor #2

Property Line by Truck Co.

Sound Decrease	18 dB(A)
Leq:	58.1 dB
Lmax:	70.9 dB(A)

Receptor #3

Residence

Sound Decrease	22.5 dB(A)
Leq:	53.6 dB(A)
Lmax:	66.4 dB(A)

Receptor #4

Residence

Sound Decrease	21 dB(A)
Leq:	55.1 dB(A)
Lmax:	67.9 dB(A)

Receptor #5

Residence

Sound Decrease	20 dB(A)
Leq:	56.1 dB(A)
Lmax:	68.9 dB(A)

Receptor #3 - From Run Around Track

Residence

Sound Decrease	20 dB(A)
Leq:	56.1 dB(A)
Lmax:	68.9 dB(A)

Sound Sources (Night)

Receptor #1

Property Line by 14A

Sound Decrease	20 dB(A)
Leq:	53.6 dB(A)
Lmax:	59.2 dB(A)

Receptor #2

Property Line by Truck Co.

Sound Decrease	18 dB(A)
Leq:	55.6dB(A)
Lmax:	61.2 dB(A)

Receptor #3

Residence

Sound Decrease	22.5 dB(A)
Leq:	51..1 dB(A)
Lmax:	56.7 dB(A)

Receptor #4

Residence

Sound Decrease	21 dB(A)
Leq:	52.6 dB(A)
Lmax:	58.2 dB(A)

Receptor #5

Residence

Sound Decrease	20 dB(A)
Leq:	53.6 dB(A)
Lmax:	59.2 dB(A)

Sound From Brine Pumps

Receptor #6

Cemetery

Sound Decrease	25 dB(A)
Lmax	56.5 dB(A)

Receptor #7

Hotel

Sound Decrease	26 dB(A)
Lmax	55.5 dB(A)

Sound From Injector Pumps

Receptor #6

Cemetary

Sound Decrease	26.5dB(A)
Lmax	58.5 dB(A)

Receptor #7

Hotel

Sound Decrease	26 dB(A)
Lmax	59 dB(A)

Leq- Resulting Ambient Sound Level

Lmax - Resulting maximum Sound Level

Graph 1: Sound Level Decrease Over Distance

Sound Decreases 6 dB for every doubling of distance greater than 50 ft

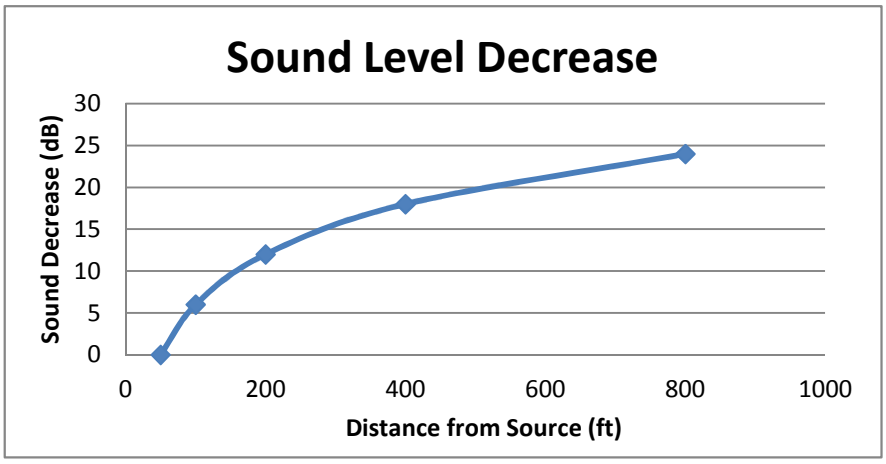

Appendix C
Pump Manufacturer Specifications

AC Motor - Performance Data

Performance Data

Motor No.	324TTGP1026	**Suffix**	BD	**NP Seq**	0	
Winding	K2864234	**R Number**		**Group/Subgroup**	1	/
Phase	3	**Poles**	4	**No. of Speeds**	1	
Base Voltage	460	**Base Freq**	60	**Base HP**	40.0	
Rotor Weight	140.0	**Inertia (WK²)**	4.8 LB-FT^2	**Guarenteed Eff**	91.7	
Res. Main	.165 Ohms	**Res. Aux**		**Connection**	2Y	
KVAR Max	15.0	**KVAR 95**	12.5	**KVAR 90**	7.5	
WK Max	250.0	**Start Max**	2	**Safe Stall Time**	25	
Req. Velocity		**Sound Pressure**	68 dBA@3'	**Sound Power**	77 dBA	
CFM	500	**FL Frame Temp**		**Torque UOM**	LB-FT	

Base Voltage (Freq 1) 460 **Base Voltage (Freq 2)** 380 Ratio

Load Curve @ 60 Hz, 460 Volts, 40 Horsepower

Load	Amps	KW	RPM	Torque	Eff	PF	Rise By Resis	Frame Rise
0.0	21.0	0.75	1800	0.0	0.0	4.0	0.0	-
0.25	23.2	8.2	1792	29.5	91.0	44.0	0.0	-
0.5	30.0	16.0	1782	59.0	93.6	66.5	0.0	-
0.75	39.0	24.0	1775	89.0	93.6	76.5	0.0	-
1.0	50.0	32.0	1762	119.0	93.0	81.0	75.0	-
1.15	57.0	37.0	1758	137.0	93.0	82.0	105.0	-
1.25	61.5	40.5	1750	150.0	92.4	82.5	0.0	-

SOURCE: DATABASE **GROUP:** 0

Load Curve @ 50 Hz, 380 Volts, 30 Horsepower

Load	Amps	KW	RPM	Torque	Eff	PF	Rise By Resis	Frame Rise

No Load Curve Data!

Speed Torque Curve @ 60 Hz, 460 Volts

Curve Point	Amps	Amps(%)	Torque	Torque(%)	RPM	KW	PF	HP
LR	282.0	564.0	220.0	185.0	0.0	-	36.0	40.0
BD	170.0	340.0	315.0	265.0	1650	-	68.0	40.0
1/3	270.0	540.0	200.0	168.0	600	-	-	40.0
PU	250.0	500.0	210.0	176.0	900	-	-	40.0
2/3	225.0	450.0	225.0	189.0	1200	-	-	40.0
FL	50.0	100.0	119.0	100.0	1762	-	-	40.0
NL	21.0	42.0	0.0	0.0	1800	-	-	40.0

SOURCE: CALCULATED **GROUP:** 0

Speed Torque Curve @ 50 Hz, 380 Volts

Curve Point	Amps	Amps(%)	Torque	Torque (%)	RPM	KW	PF	HP
LR	270.0	540.0	205.0	172.0	0.0	0.0	0.0	40.0
BD	165.0	330.0	310.0	261.0	1350	0.0	0.0	40.0

SOURCE: DATABASE **GROUP:** 0

Renameplate @ 460 Volts

Approved	Hz	Volts	HP	FL Amps	SF Amps	SF	RPM	Eff	PF	R/R	Design	KVA	Remarks
Y	60	380	30.0	44	44	1	1765	93.0	83.0	60.0	B	F	
Y	60	380	30.0	44	50	1.15	1765	93.0	83.0	80.0	B	F	
N	60	380	40.0	-	-	1	0.0	0.0	0.0	0.0	-	-	WEAK
Y	60	400	30.0	42	42	1	1768	93.6	81.5	55.0	B	F	
Y	60	400	30.0	42	48	1.15	1768	93.6	81.5	75.0	B	F	
N	60	400	40.0	-	-	1	0.0	0.0	0.0	0.0	-	-	WEAK
Y	60	416	30.0	41	41	1	1772	93.6	80.5	55.0	B	G	
Y	60	416	30.0	41	47	1.15	1772	93.6	80.5	75.0	B	G	
Y	60	416	40.0	54	54	1	1755	92.4	83.5	90.0	B	F	
Y	60	440	40.0	51.5	51.5	1	1758	93.0	82.0	85.0	B	F	
Y	60	440	40.0	51.5	59	1.15	1758	93.0	82.0	115.0	B	F	
Y	60	460	30.0	39.5	39.5	1	1775	93.6	75.0	55.0	A	J	
Y	60	460	30.0	39.5	45	1.15	1775	93.6	75.0	75.0	A	J	
Y	60	480	40.0	48.5	48.5	1	1765	93.6	78.5	75.0	A	H	
Y	60	480	40.0	48.5	55.5	1.15	1765	93.6	78.5	105.0	A	H	
Y	50	380	25.0	40.5	40.5	1	1475	92.4	76.5	55.0	A	H	
Y	50	380	25.0	40.5	45	1.15	1475	92.4	76.5	75.0	A	H	
Y	50	380	30.0	45.5	45.5	1	1470	93.6	80.0	65.0	B	G	
Y	50	380	30.0	45.5	52	1.15	1470	93.6	80.0	85.0	B	G	
Y	50	380	33.3	50	50	1	1465	93.0	81.0	85.0	B	F	
Y	50	380	33.3	50	57	1.15	1465	93.0	81.0	115.0	B	F	
N	50	380	40.0	-	-	1	0.0	0.0	0.0	0.0	-	-	HOT
Y	50	400	30.0	45	45	1	1472	93.6	78.0	62.0	A	H	
Y	50	400	30.0	45	51.5	1.15	1472	93.6	78.0	82.0	A	H	
N	50	400	40.0	-	-	1	0.0	0.0	0.0	0.0	-	-	HOT
Y	50	415	30.0	44.8	44.8	1	1475	93.6	74.5	62.0	A	J	
Y	50	415	30.0	44.8	51	1.15	1475	93.6	74.5	82.0	A	J	
Y	50	415	30.0	44.8	56	1.25	1475	93.6	74.5	105.0	A	J	
N	50	415	40.0	-	-	1	0.0	0.0	0.0	0.0	-	-	HOT
N	50	440	30.0	-	-	1	0.0	0.0	0.0	0.0	-	-	SAT
N	50	440	40.0	-	-	1	0.0	0.0	0.0	0.0	-	-	SAT

Rerates for 324TTGP1026

Winding	Group	Assigned To Rework #	Rating OK	Hertz	HP	RPM	Volts Low	Volts High	Duty	Encl	SF	Max Amb	Insul	Design
K2864234	1	-	YES	60/50	40/30	1762/1472	230 - 200	460 - 400	CONT	EPFC	1.0	40.0	F3	B
K2864234	1	-	YES	60	40	1765	190	380	CONT	EPFC	1.0	40.0	F3	B
K2864234	1	-	NO	50	40		190	380	CONT	TEFC	1	40.0	F3	B

~~K2864234~~	~~1~~	~~-~~	~~NO~~	~~50~~	~~40~~		~~208~~	~~415~~	~~CONT TEFC~~	~~1~~	~~40.0~~	~~F3~~	~~A~~
K2864234	1	-	YES	50	30	1472	200	400	CONT TEFC	1	40.0	F3	A
K2864234	1	-	YES	50	25	1475	380		CONT EPFC	1.15	55.0	F3	A

Company: Fischer Process Industries
Name: Superior Energy Systems
Date: 6/8/2009

Powered By PUMP-FLO™

Pump:

Size: 12IC (9 stage)

Type: Vertical
Synch speed: 1800 rpm

Speed: 1760 rpm
Dia: 8.965 in

Curve: 12IC

Impeller: 12KL SS ENCL

Specific Speeds:

Ns: ---
Nss: ---

Dimensions:

Suction: 8 in
Discharge: 8 in

Vertical Turbine:

Bowl size: 11.75 in
Max lateral: 0.937 in
Thrust K factor: 6 lb/ft

Pump Limits:

Temperature: 140 °F
Pressure: 345 psi g
Sphere size: 0.875 in

Power: 300 hp
Eye area: --- in²

Search Criteria:

Flow: 750 US gpm

Head: 568 ft

Fluid:

Propane
SG: 0.509
Viscosity: 0.1128 cP

Temperature: 60 °F
Vapor pressure: 108 psi a
Atm pressure: 14.7 psi a

NPSHa: --- ft

Motor:

Standard: NEMA
Enclosure: TEFC

Size: 75 hp
Speed: 1800
Frame: 365T

Sizing criteria: Max Power on Design Curve

750 GPM @ 125 PSI 1770 RPM PROPANE

---- Data Point ----	
Flow:	750 US gpm
Head:	568 ft
Eff:	83.7%
Power:	65.4 hp
NPSHr:	7.13 ft

---- Design Curve ----	
Shutoff head:	824 ft
Shutoff dP:	181 psi
Min flow:	168 US gpm

BEP: 84.7% @ 838 US gpm

NOL power:
71.8 hp @ 1144 US gpm

-- Max Curve --

Max power:
79.7 hp @ 1220 US gpm

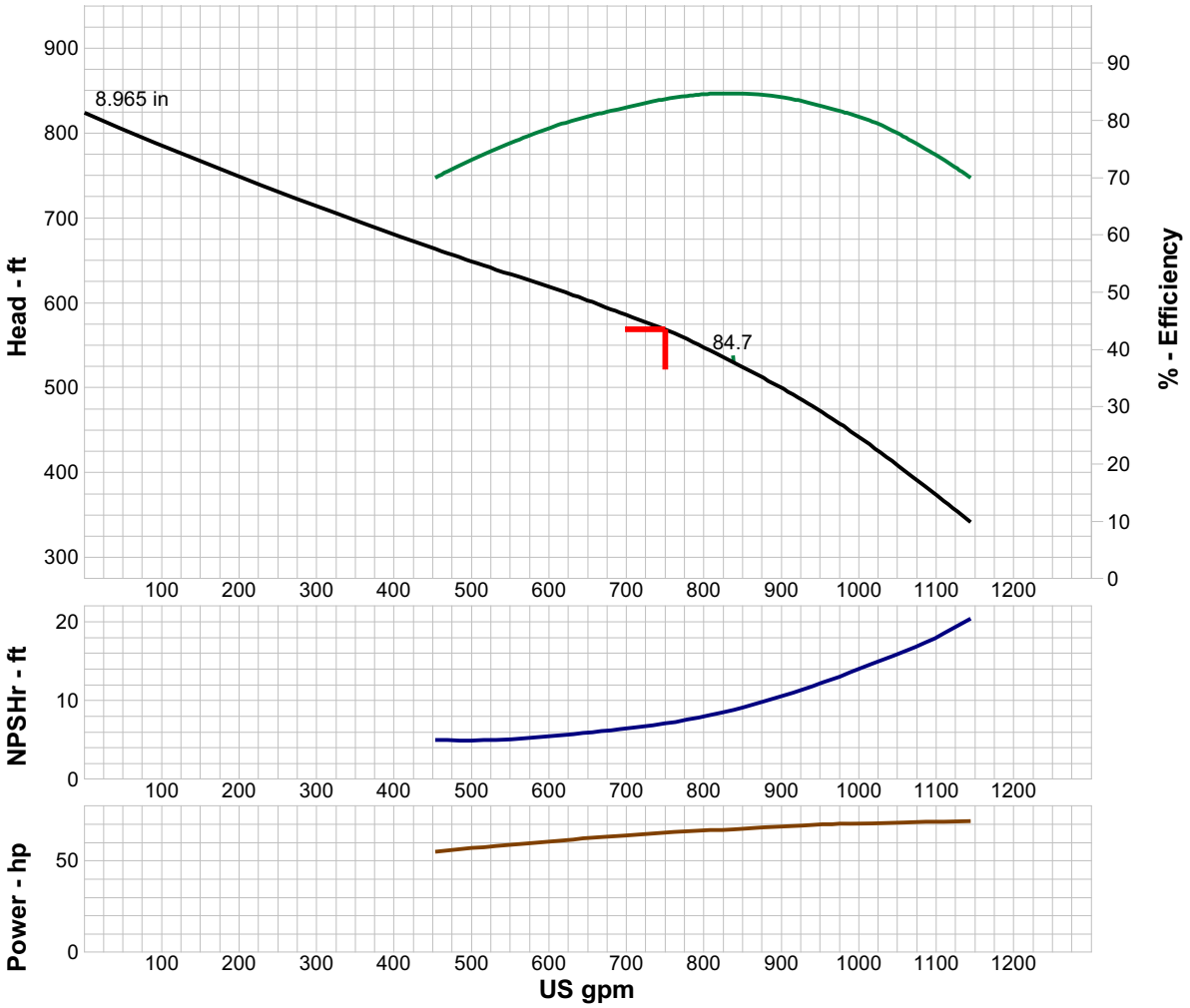

Performance Evaluation:

Flow US gpm	Speed rpm	Head ft	Efficiency %	Power hp	NPSHr ft
900	1760	499	84	68.8	10.6
750	1760	568	83.7	65.4	7.13
600	1760	618	78.5	60.7	5.52
450	1760	664	69.8	55.1	5
300	1760	717	60.3	49.2	5

Selected from catalog: Hydroflo V&S Pumps 60Hz 12209 Vers: 14

Superior Energy Systems

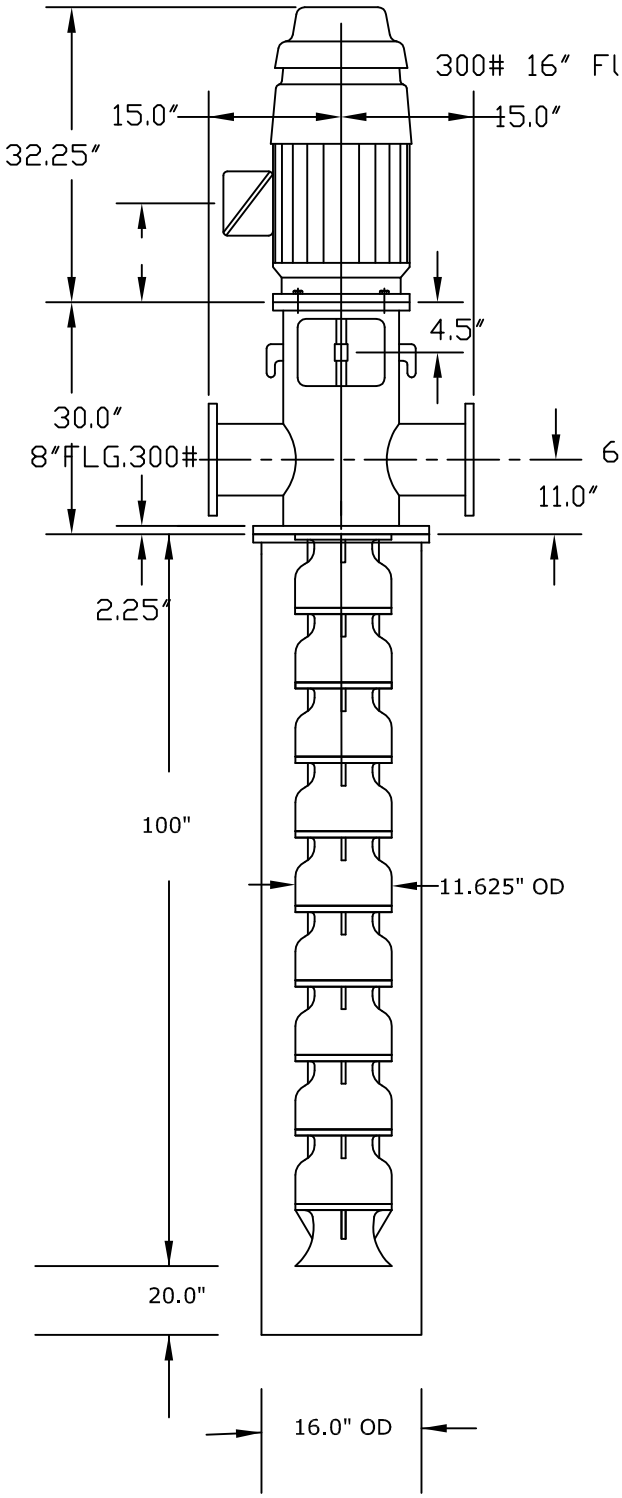

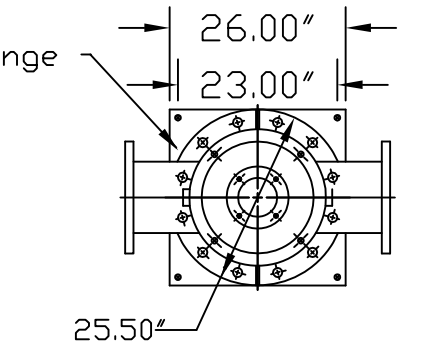

26" Square 2.25" thick, 23" Sq. 4 bolt holes 1.0" diameter

DATE 7/10/09
CUSTOMER Fischer Process

Propane booster

JOB/QUOTE # Propane061509
QUANTITY: 3

R.P.M 1770
G.P.M. 750
T.D.H. 568
EFF. 82%
B.H.P. 65.4
BOWL MODEL # 12IC-9 stage
201 Stainless Enclosed Impellerrs
COLUMN & SHAFT
''''
'''''

26" Square Can Mounting Plate

DISCHARGE HEAD TEE HD: 6" X 8"

SEAL TYPE 1 1/4"
Supply by others

IMP. DIA.
IMP. TYPE ENCLOSED 201 SSS
416SS COLLETS
18-8SS BOLTS

OTHER BOWL BRGS. carbon
BOWL: CL30 CI ENAMEL LINED

SUCTION FLANGE
8" DIA. 300# FLG.

DISCHARGE FLANGE
6" DIA. 300# FLG.

MOTOR

MAKE US MOTORS
ENCLOSURE Exp. Proof TEFC
N.R.R. ~~or S.R.C.~~
H.P. 75 S.F. 1.00
R.P.M. 1770
PHASE 3 CYCLE 60
VOLTAGE 460v
V.S.S.
OTHER MOTOR INFO:

Explosion Proof Class 1 Group D

Pump will ship assembled, but not in the cans.
Pump will ship less seal. ASI Cartridge Seal will be supplied by Fischer Process Industries, for installation at the jobsite by others.

Mechanical Seal
ASI Model 595 Dual Balanced Cartridge Seal, 316SS construction, carbon stationary/silicon carbide rotary(inboard), carbon stationary/silicon carbide rotary(outboard), Viton O-rings, with pumping ring.

REV.	DATE	BY	ECN
	REVISIONS		

DRN. BY R.M.
DATE 3/9-09 RM

Hydroflo pumps

DESCRIPTION:
"T" DISCHARGE HEAD WITH CAN

MATERIAL

DRWG NO A-00190 RM T HD
REV

SYM.	REVISION	DATE	BY
A	U-DATED MATERIAL SPECS & SCREENS	11-22 06	B.S.

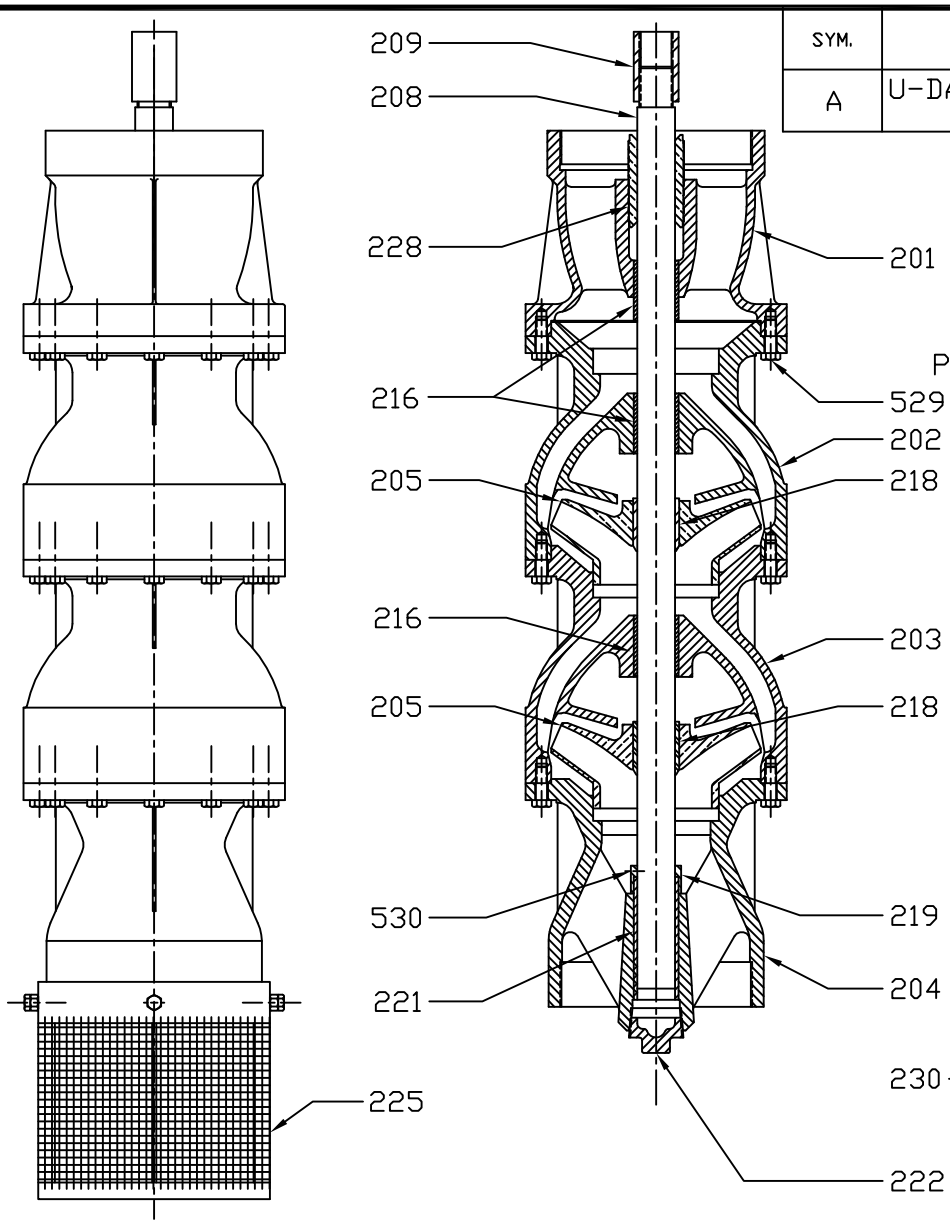

Hydroflo pumps

PRODUCT LUBE BOWL ASSEMBLY
& PARTS LISTING

DATE 7/10/09
DISTRIBUTOR Fischer Process

JOB Propane

JOB/QUOTE #
QUANTITY 3

CATALOG NUMBER	QTY.	PART NAME	STANDARD MATERIAL (A.S.T.M. DESIGNATION)	SPECIFICATION REQUIREMENT
201		CASE, DISCHARGE HOUSING	CAST IRON A-48 CLS 30	
202	1	BOWL, TOP HOUSING	CAST IRON A-48 CLS 30	
203	8	BOWL, INTERMEDIATE HOUSING	CAST IRON A-48 CLS 30	
204	1	CASE, SUCTION HOUSING	CAST IRON A-48 CLS 30	
205	9	IMPELLER (ENCLOSED) (SEMI-OPEN)	SS GR. 201	
208	1	SHAFT, BOWL	SS GR. 416	
209	1	COUPLING, BOWL SHAFT	SS GR. 416	
216	9	BEARING, DISCH. (LOWER) & BOWL	]	Carbon
218	9	COLLET, IMPELLER	SS GR. 416	
219	1	COLLAR, SAND	SS GR. 416	
530	1	SET SCREW, SAND COLLAR	SS GR. 18-8	
221	1	BEARING, SUCTION CASE		Carbon
222	1	PLUG, GREASE	COMMERCIAL	
529		SCREW, CAP	COMMERCIAL 18-8 SS	
225		SCREEN, BASKET (CLIP ON)	SS GR. 304	
228		BEARING, DISCHARGE CASE (UPPER)	BRONZE B-505-932	
230		SCREEN, CONE (THREADED)	FAB, SS GR. 304	

A-00029 REV. A

VERTICAL MOTORS

EXPLOSION PROOF - HIGH THRUST
FRAME: 364,365VP,VPZ
BASIC TYPE: LV4,LVC4,NV4,NVC4

PRINT: 09-2427
EFFECTIVE: 16-MAY-02
SUPERSEDES: NEW

SHEET 1 OF 1

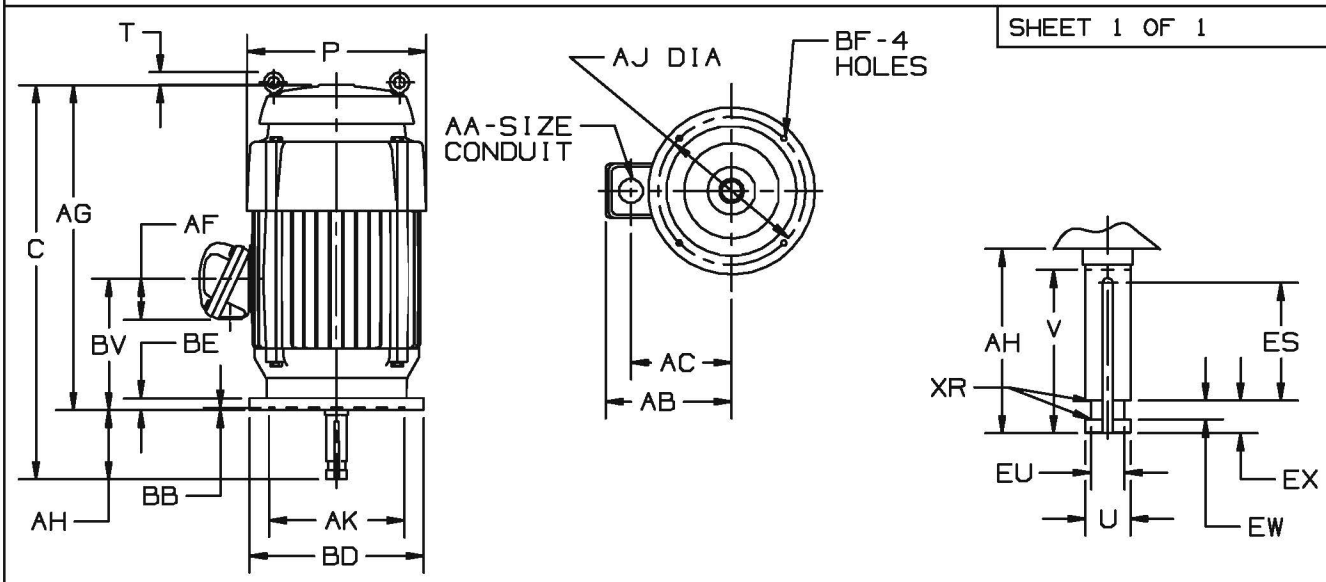

ALL DIMENSIONS ARE IN INCHES AND MILLIMETERS

UNITS	C	P	T	V MIN	AA	AB	AC	AF	AG	AH ±.062
IN	36.75	18.75	1.31	4.50	3 NPT	17.56	12.25	4.56	32.25	4.500
MM	933	476	33	114		446	311	116	819	114.30

UNITS	AJ	AK +.005	BB MIN	BD MAX	BE	BF	BV	ES MIN	EW +.002	EX -.005	XR
IN	14.750	13.500	.25	16.50	1.00	.69	13.00	3.03	.375	.750	.03
MM	374.65	342.90	6	419	25	18	330	77	9.53	19.05	1

FRAME	UNITS	U -.001	EU -.005	SQ KEY
364,365VP	IN	1.625	1.250	.375
	MM	41.28	31.75	9.53
364,365VPZ	IN	2.125	1.750	.500
	MM	53.98	44.45	12.70

1: ALL ROUGH CASTING DIMENSIONS MAY VARY BY .25" DUE TO CASTING VARIATIONS.
2: LARGEST MOTOR WIDTH.
3: CONDUIT OPENING MAY BE LOCATED IN STEPS OF 90°. STANDARD AS SHOWN WITH CONDUIT OPENING DOWN.
4: TOLERANCES SHOWN ARE IN INCHES.

TOLERANCES	
FACE RUNOUT	.007 F.I.R.
PERMISSIBLE ECCENTRICITY OF MOUNTING RABBET	.007 F.I.R.
PERMISSIBLE SHAFT RUNOUT	.002 F.I.R.

U.S. ELECTRICAL MOTORS
DIVISION OF EMERSON ELECTRIC CO.
EMERSON
DO NOT USE FOR CONSTRUCTION PURPOSES UNLESS CERTIFIED

Model Number:	DI=11109
Status:	**PUB**
Motor Type:	LV4
Frame:	365VP
MPI:	68118
HP:	75 with NRR
POLES:	4
VOLTS:	460
HZ:	60
SERVICE FACTOR:	1.00
EFFICIENCY (%):	
S.F.	0.0
FULL	92.4
3/4	93.3
1/2	92.6
1/4	88.7
POWER FACTOR (%):	
S.F.	0.0
FULL	86.8
3/4	85.7
1/2	80.9
1/4	64.6
NO LOAD	8.9
LOCKED ROTOR	33.0
AMPS:	
S.F.	0.0
FULL	88.0
3/4	66.0
1/2	47.0
1/4	31.0
NO LOAD	22.1
LOCKED ROTOR	505.9
NEMA CODE LETTER	F
NEMA DESIGN LETTER	B
FULL LOAD RPM	1775
NEMA NOMINAL EFFICIENCY (%)	92.4
GUARANTEED EFFICIENCY (%)	91.0
MAX KVAR	15.0
AMBIENT (°C)	40

ALTITUDE (FASL)	3300
SOUND PRESSURE (DBA @ 1M)	75.0
TORQUES:	
BREAKDOWN{% F.L.}	206
LOCKED ROTOR{% F.L.}	171
FULL LOAD{LB-FT}	221.6
SAFE STALL TIME-HOT (SEC)	20

The Above Data Is Typical, Sinewave Power Unless Noted Otherwise

Emerson Motor Technologies

EMERSON MOTOR COMPANY
ST. LOUIS, MO

U.S. Motors

Emerson Motor Company is a division of Emerson Electric Co.
The Emerson logo is a trademark and service mark of Emerson Electric Co.

GOULDS PUMPS ESTABROOK CORP

INERGY MIDSTREAM

Client: Inergy Midstream
INQ NO: Brine Pond Pump
Proposal No: JFH09-08-13 01REV#1
Item No: ITEM 001

Attn: Barry Moon

ESTABROOK CORP.
The Estabrook Corporation
700 West Bagley Road
P.O. BOx 804
Berea, OH 44017

1-800-959-9161, X-202
1-800-959-2234 (fax)
joy@estabrk.com

i-FRAME™

5 YEAR WARRANTY

MODEL:3196 MTi SIZE:4x6-10H QTY: 3

PRICES in USD	
Pump Unit	14,344
Driver	2,268
Subtotal 3 Units	49,836
Boxing	
Testing	
Freight	
Accessories	
Total 3 Units	**49,836**

Shipment: Ship 8 Weeks ARO

Operating conditions

SERVICE	Pond Pump
LIQUID	Brine Temp. 70.0 deg F, SP.GR 1.200, Viscosity 20.000 cp, rated / max. suction pressure 0.0 / 0.0 psi g
CAPACITY Rated	800.0 gpm
HEAD	99.0 (ft)

Performance at 1775 RPM

PUBLISHED EFFY	76.0% (CDS)
RATED EFFY	72.5% with contract seal
RATED POWER	33.1 hp (incl. Mech. seal drag 0.22). (Run out 39.2 hp)
NPSHR	8.9 ft
DISCH PRESSURE(R)	51.6 psi g (55.9 psi g @ Shut off) Based on 0.0 psi g Suc.press
PERF. CURVE	4032-5 (Rotation CW viewed from coupling end)
SHUT OFF HEAD	107.6 ft
MIN. FLOW	Continuous Stable: 399.6 gpm Hydraulic: 399.6 gpm Thermal: N/A

Materials

CONSTRUCTION	CD4MCuN
CASING	CD4MCuN (max.casing.pres. @ rated temp. 290.0 psi g)
ST.BOX COVER	CD4MCuN
IMPELLER	CD4MCuN - Open (10.2500 in rated, max=10.2500 in, min=8.0000 in)
CASING GASKETS	Aramid Fiber with EPDM Rubber
IMPELLER O-RING	Teflon
SHAFT MATERIAL	316SS
LUBRICATION	Flood oil
SEAL CHAMBER	Taper bore plus with VPE
BEARINGS	6309 (Inboard) 3309 (Outboard)
COUPLING	Rexnord - Omega Rex Elastomer- ES-10 (standard orange element)-S.F. 1.00
COUPLING GUARD	Carbon steel
BASEPLATE	ChemBasePlus Blue Zanite C06913A

Sealing Method

MECHANICAL SEAL	JC 5611L SC/TC/Viton/Alloy 20 Grease Quench - (Cartridge - Single)

Flanges

150# flat face

Liquid end features

Impeller balanced to ISO 1940 G6.3

Frame Connections

Bearing frame drain

Bottle oiler connection

Frame cooler access

Oil fill connection

Frame features

Condition Monitor

Ductile iron frame adapter

Inpro VBXX-D Hybrid Bearing Isolators

Premium Severe Duty Thrust Bearings

Piping

Grease Quench

Testing

Non witnessed casing hydrostatic-test

Baseplate Features

303SS inserts

Painting

Goulds Blue standard painting

Warranty

5 Year Extended Warranty (All the components, manufactured by ITT Goulds pumps, in the liquid end and power end are covered).

Optional Features:

Casing connections

Casing drain tapped	**add**	163
Discharge gauge only	**add**	163

Baseplate Features

Motor adjusters	**add**	269
Vertical leveling screws	**add**	128

All above optional adders are per unit in (USD)

Noise level Data

Maximum predicted sound pressures level pump only in Decibels (db) Re 0.0002 microbars measured 3ft horizontally and 5ft from the floor per QCP 580

Noise Level	31.5	63	125	250	500	1k	2k	4k	8k	A
Pump	70.0	70.0	72.0	74.0	74.0	75.0	73.5	74.5	74.5	81.5

Driver : Electric motor Manufacturer : Baldor - Reliance

FURNISHED BY	Pump mfg	MOUNTED BY	Pump mfg
RATING	40.0 hp (29.8 KW)	ENCLOSURE	Severe Duty/Mill and Chemical Premium Efficiency
PHASE/FREQ/VOLTS	3/60 Hz/230/460	SPEED	1800 RPM
INSULATION/SF	F/1.15	FRAME	324T

Weights and Measurements

TOTAL NET UNIT WEIGHT / VOLUME	1,318.0 lb / 21.4 ft³
TOTAL GROSS UNIT WEIGHT / GROSS VOLUME	1,493.0 lb / 34.9 ft³

Comments

ECP4110T

Program Version 1.30.0.0

Our offer does not include specific review and incorporation of any Statutory or Regulatory Requirements and the offer is limited to the requirements of the design specifications. Should any Statutory or Regulatory requirements need to be reviewed and incorporated then the Customer is responsible to identify those and provide copies for review and revision of our offer.

Our quotation is offered in accordance with our comments and exceptions identified in our proposal.

Click here to download the pump Bulletin

Click here to learn more about the new i-FRAME™

PUMPSMART FLOW ECONOMY ESTIMATES

FIXED SPEED

25.5
gpm/kW

Expected range for typical operation 19.5 to 31.0 gpm/kW

PUMPSMART

35.2
gpm/kW

Expected range for typical operation 30.3 to 38.3 gpm/kW

Click Here To Learn More!

Estimated Annual Savings 3,847 USD

New Product Announcement

ONBOARD INTELLIGENCE BECOMES STANDARD ON WORLD'S BEST-SELLING PROCESS PUMP

On July 1, 2008 ITT Goulds Pumps proudly began production of the next generation ANSI pump - the **3196 i-FRAME ™.**

Marking an industry first, the new 3196 i-FRAME provides operations personnel, maintenance managers, and reliability engineers - the people responsible for monitoring and repairing rotating equipment - with early warning of trouble so that changes to the process or machine can be made before failure occurs.

The 3196 i-FRAME's patent-pending condition monitor is nested securely atop the power end to measure critical vibration and temperature readings. Variations in temperature or vibration that exceed preset parameters will activate the early warning system by displaying flashing red lights easily recognized during routine walk-arounds.

The Goulds Model 3196 is already the best-selling process pump in the world and now we've made it even better. This increased reliability and condition monitoring intelligence gets to the heart of our most important customer requirement - reduced downtime and equipment Life Cycle Cost.

In addition to the condition monitor built into the pump, this innovative new design incorporates many other standard features designed to increase reliability and the life of the pump. They include:

- Premium severe duty thrust bearings which increase fatigue life by 2 to 5 times that of standard bearings
- Dual stainless-steel, bronze-bearing isolators for improved corrosion resistance and contaminant exclusion
- An optimized sump design to improve heat transfer and collect and concentrate contaminants away from the bearings, resulting in longer bearing life

So in addition to providing great additional value, buying the 3196 i-FRAME gives you peace of mind in knowing that you have an authentic Goulds pump, designed and manufactured to our quality standards to minimize Life Cycle Costs and maximize uptime.

We're so confident this is the most reliable and intelligent product on the market, we will back every 3196 i-FRAME pump with a 5-Year Warranty as standard.

The Goulds 3196 pump continues to be recognized as a workhorse in chemical, oil and gas, petrochemical, pulp and paper, and other industrial processes, making it the most popular process pump in the world. It is available in 29 different sizes with a wide range of features for handling challenging applications.

TECO Westinghouse

ISSUED	PERFORMANCE DATA	ENCLOSURE
03/11/05		TEFC
TYPE	3-PHASE INDUCTION MOTOR	CATALOG#
AEHE		E7002

NAMEPLATE INFORMATION

OUTPUT HP	OUTPUT KW	POLE	FRAME SIZE	VOLTAGE	HZ	RATED AMBIENT	INS. CLASS	NEMA DESIGN	TIME RATING	SERVICE FACTOR
700	522	2	5810A	460	60	40°C	F	B	CONT.	1.15

TYPICAL PERFORMANCE

FULL LOAD RPM	EFFICIENCY FULL LOAD MIN. %	EFFICIENCY FULL LOAD NOM. %	EFFICIENCY 3/4 LOAD %	EFFICIENCY 1/2 LOAD %	POWER FACTOR F. L. %	POWER FACTOR 3/4 LOAD %	POWER FACTOR 1/2 LOAD %	MAXIMUM POWER FACTOR CORRECTION
3580	94.5	95.5	95.2	94.5	90.5	88.5	75	127 KVAR

CURRENTS NO LOAD	CURRENTS FULL LOAD	CURRENTS LOCKED ROTOR	NEMA KVA CODE LETTER
159	728	5520	G

TORQUE FULL LOAD lb-ft	TORQUE LOCKED ROTOR %FLT	TORQUE PULL UP %FLT	TORQUE BREAK DOWN %FLT	INERTIA ROTOR WR^2 lb-ft^2	INERTIA NEMA LOAD WK^2 lb-ft^2	INERTIA MAX ALLOWABLE WK^2 lb-ft^2	ACCEL TIME NEMA LOAD WK^2 Sec	ACCEL TIME MAX ALLOWABLE WK^2 Sec
1027	80	64	230	175	503	755	4.85	6.65

SAFE STALL TIME IN SECONDS COLD	SAFE STALL TIME IN SECONDS HOT	ALLOWABLE STARTS PER HOUR COLD	ALLOWABLE STARTS PER HOUR HOT	SOUND PRESSURE LEVEL @ 3 FT dB(A)
23	18	2	1	85

Serial No: 263C113-1-2-3-4
Customer: Quadna, Inc.
Customer P.O. No.: 35141
Pump Item No.: 500gpm Main Selection
Service: Not Available
Project: Inergy Finger Lakes

APPROVED:	M. PRATER	DRAWING NO.	3A057E7002	REVISION	0

INERGY MIDSTREAM
Inergy Finger Lakes
PO# NY09-02005 rev 1
Job# 0306-000029

Doc No: 263113 D-PRF REV0

Appendix D
Developed Site Sound Monitoring

FINGER LAKES LPG STORAGE FACILITY

NOISE MONITORING PLAN

Finger Lakes' parent, Inergy, and its affiliates, has on a number of FERC projects performed post-operational noise monitoring to determine whether the predicted noise levels are as expected. For the LPG storage facility in the Town of Reading, Finger Lakes will perform confirmatory sound surveys which it will then submit to DEC as follows:

> Within sixty (60) days after the commencement of the first injection season, Finger Lakes shall perform a confirmatory sound study, consistent with the methodology and locations utilized in the revised sound study submitted with the Draft Supplement Environmental Impact Statement (DSEIS). Finger Lakes will ensure that sound samples of the same duration in the revised sound study (i.e., 1 hour) are taken at same receptor locations and during a time when (1) rail operations are occurring; (2) injection is occurring into the caverns and the electronically driven injection pumps are being used.
>
> In addition, within sixty (60) days after withdrawal from the caverns starts occurring, Finger Lakes shall perform a confirmatory sound study, consistent with the methodology and locations utilized in the revised sound study. Finger Lakes will ensure that sound samples of the same duration in the revised sound study (i.e., 1 hour) are taken at the same receptor locations and during a time that (1) truck loading operations are occurring; and (2) rail car loading operations are occurring.
>
> If the noise attributable to these operations exceeds 65 dBa or the measured ambient noise levels by more than six (6) dBa Leq[1] if the ambient is greater than 65 dBa, then the confirmatory sound study shall include recommendations for further mitigation which may include additional barrier attenuation, additional plantings, muffling, etc. In such a case, a second confirmatory sound study shall be conducted focusing on the specific receptor where there was an exceedance of the predicted sound levels to ensure the effectiveness of the additional mitigation measures.

[1] The six (6) decibel increase is conservative given that, according to the DEC noise guidance, "[a]n increase of 10 dB(A) deserves consideration of avoidance and mitigation measures in most cases." DEC Noise Policy,p. 13.