AECOM Environment

Prepared for:
BASF Corporation
Florham Park,

Prepared by:
AECOM
Chelmsford, MA
60197930
February 2014

Natural Resource Restoration Work Plan
Hudson River Operable Units 1 and 2
BASF Rensselaer
Rensselaer, New York

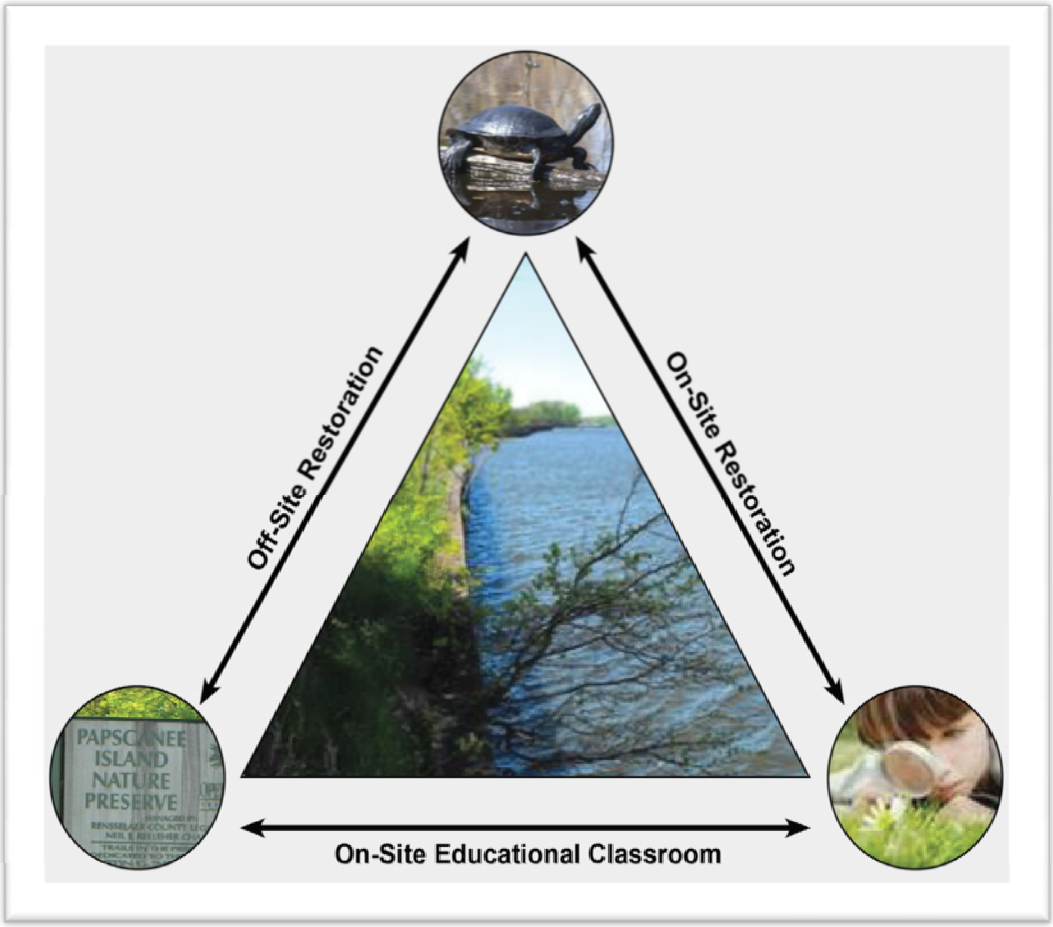

AECOM Environment

Prepared for:
BASF Corporation
Florham Park,

Prepared by:
AECOM
Chelmsford, MA
60197930
February 2014

Natural Resource Restoration Work Plan Hudson River Operable Units 1 and 2 Rensselaer, New York

Prepared By Don Kretchmer

Reviewed By John Bleiler

Contents

1.0 Introduction.....1

2.0 Program Element 1: River-Based Projects 3

2.1 Bulkhead Enhancement 3

2.2 Wildlife Ramp 7

2.3 Riverfront Buffer 8

2.4 On-Site Pond..... 8

3.0 Program Element 2: Off-Site Ecological Enhancements 11

3.1 Papscanee Island Nature Preserve Master Plan..... 13

3.2 Papscanee Island Nature Preserve Ecological Enhancements..... 13

3.2.1 Vernal Pool Invasive Species Management 13

3.2.2 Vernal Pool Trash and Debris Management 14

3.2.3 Osprey Platform 15

3.2.4 Interpretive Signage..... 15

3.3 Map Turtle Population and Potential for Re-Introduction Study..... 16

3.4 Historic Dredge Fill Removal 18

4.0 Program Element 3: BASF Education Classroom 19

4.1 Head-starting..... 21

5.0 Summary 22

6.0 Literature Cited.....24

List of Appendices

Appendix A Submar 4540 Technical Specifications

Appendix B Osprey Pole Specifications

List of Tables

Table 1. Summary of Restoration/Mitigation Projects 22

List of Figures

Figure 1.Site Locus 2
Figure 2. Bulkhead Enhancement Plan View 4
Figure 3. Artist's Rendering of Fringe Wetland 6
Figure 4. Conceptual Cross-Section: Fringe Wetland 6
Figure 5. Artist's Rendering of Wildlife Ramp 9
Figure 6. River-Front Buffer Strip and Pond 10
Figure 7. Papscanee Island Nature Preserve and Site 12
Figure 8. Education Classroom and Wildlife Refuge 20

1.0 Introduction

This work plan has been prepared on behalf of BASF Corporation (BASF) to present the scope of work for compensating asserted natural resource service losses from historical discharges at or from the BASF Rensselaer Site (the "Site"), Rensselaer, New York (NY) including the Hudson River. The Site, which is the subject of an ongoing Remedial Investigation/Feasibility Study (RI/FS) effort under the direction of the New York State Department of Environmental Conservation (NYSDEC), is depicted in Figure 1.

The BASF approach consists of an integrated combination of on-Site and off-Site ecological service projects that will provide both near-term and long-term benefits. The projects comprising this program share a common Hudson River ecological restoration linkage and tie on-going and future activities at the Site with tangible on-site and off-site ecological restoration initiatives. This ecological restoration program also provides a substantive opportunity to showcase the Rensselaer site closure program relative to newly issued NYSDEC guidance (DER-31, August 2010) on Green Remediation. This guidance provides a framework for improving the sustainability of environmental cleanups and recognizes that successful projects provide positive economic and social benefits, as well as use more sustainable practices and technologies.

The work plan reflects the following exchanges of information between NYSDEC and BASF. In January 2011, NYSDEC trustees (Division of Fisheries, Wildlife, and Marine Resources (DFWMR)) presented a preliminary settlement offer to BASF relative to perceived injuries in the Hudson River adjacent to the BASF Rensselaer Site. On August 12, 2011, BASF presented NYSDEC with its proposed approach to address natural resource damage (NRD) concerns at a meeting at NYSDEC headquarters in Albany, NY. A NRD work plan was developed by BASF and submitted to NYSDEC on September 20, 2011. A response letter from NYSDEC was sent from Andrew Guglielmi (NYSDEC) to John Bleiler (AECOM) on November 11, 2011. On April 5, 2012, a meeting was held at NYSDEC headquarters in Albany to further discuss NRD issues at the BASF Rensselaer Site. A letter was sent from Nan Bernardo (BASF) to Andrew Guglielmi on April 20, 2012, summarizing the discussion at the April 5, 2012 meeting. A June 8, 2012 Site inspection was attended by NYSDEC, AECOM, and BASF. Potential revisions to the NRD program based on this Site visit and previous agency consultation were summarized in a letter from Nan Bernardo (BASF) to Andrew Guglielmi (NYSDEC) on July 31, 2012. A letter from Andrew Guglielmi (NYSDEC) to Nan Bernardo (BASF), sent on October 26, 2012, and subsequent communications in March and May, 2013, provided further guidance from NYSDEC for the preparation of the Final Work Plan that is presented in this document. The Draft NRDA Work Plan was published in the NYSDEC Environmental Notice Bulletin (ENB) for public comment on December 11, 2013. The comment period ran from December 11, 2013 through January 31, 2014. No comments were received during the ENB comment period and this Work Plan has accordingly been finalized.

This work plan outlines the scope of work for the NRD program, which includes the following inter-connected elements:

- **Program Element 1:** River-based Projects (on-Site);
- **Program Element 2:** Off-Site Ecological Enhancements; and
- **Program Element 3:** Environmental Education Components

Figure 1. Site Locus

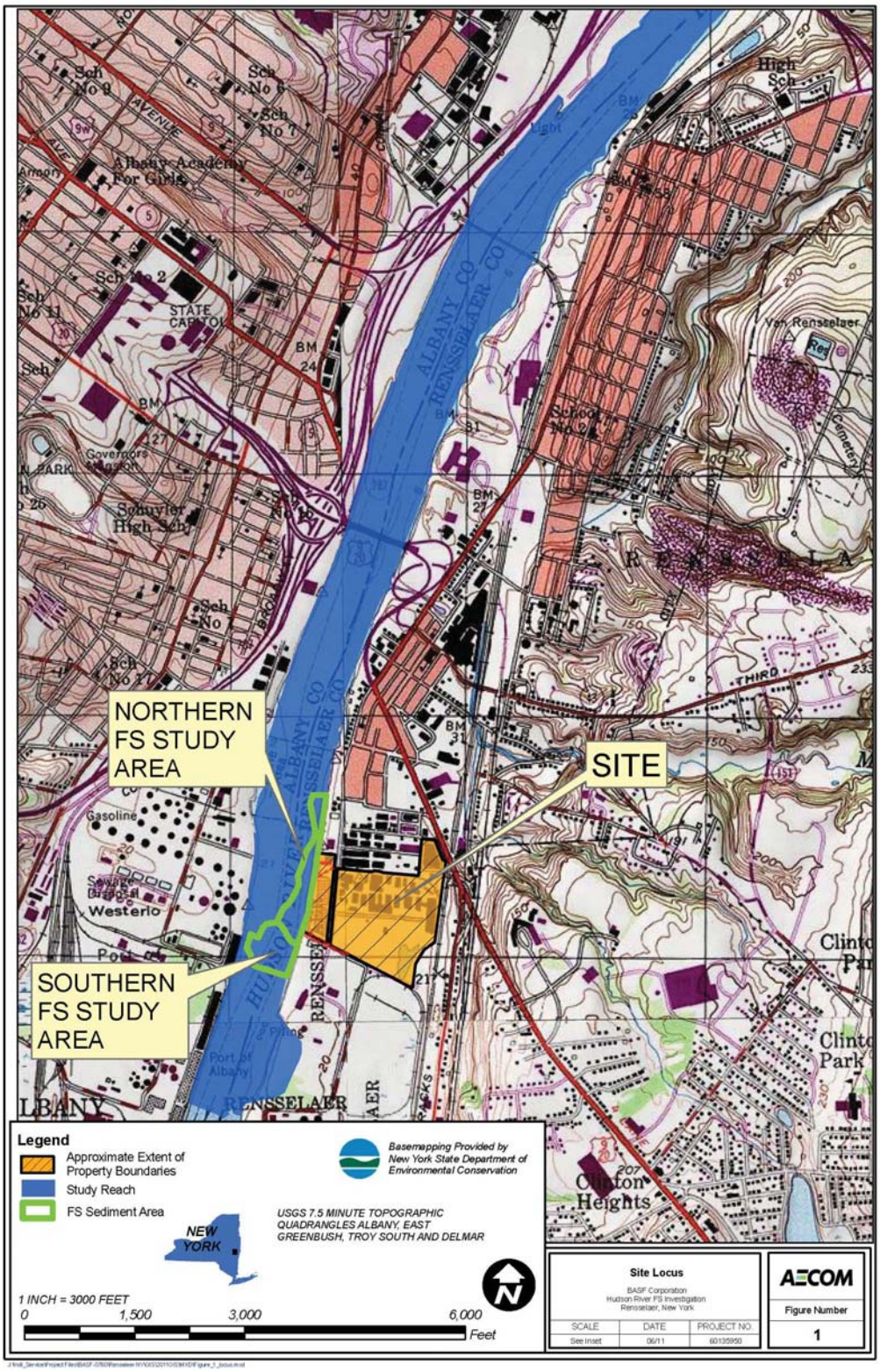

2.0 Program Element 1: River-Based Projects

The BASF NRD restoration program includes the following series of river-based projects designed to "green" the existing steel and concrete bulkhead at the Site and provide ecological continuity between the Hudson River and the adjacent upland buffer zone described in Section 2.3 below. These project elements will proceed in an adaptively managed fashion as data on early phases are obtained. BASF and the Department may mutually agree to replace elements of the river-based projects with elements of a similar scale if early data support a change in project scope.

2.1 Bulkhead Enhancement

The bulkhead enhancement effort is designed to provide a fringe intertidal wetland at the Site. This is a resource area that does not currently exist at the Site and that is in short supply along the industrialized section of the Hudson River in the vicinity of the Site. This restoration component represents an innovative approach that can be directly linked to Hudson River ecology, as well as to ongoing and future educational programming efforts. It is envisioned that the bioengineered fringe wetland components discussed in this work plan would extend approximately 10 feet into the river, and would potentially provide fringe wetland cover along five hundred (500) linear feet of the bulkhead (Figure 2), for a total of up to 5,000 square feet (sq ft) of fringe wetland system. If practical, BASF intends to utilize fill removed from elsewhere in the river in the fringe wetland and wildlife ramp construction (see Section 3.4 for additional detail regarding potential use of historic fill from elsewhere in the river).

Creation of 5,000 sq ft of fringe intertidal wetland in this region will provide immediate environmental benefit to the river. A fringe wetland system in this area will provide a stable and ecologically valuable division between dry land uses and the navigational portion of the river, will promote recovery of a vegetated shoreline in an area with virtually no extant fringe wetland habitat, and will provide habitat and dissolved oxygen for native and migratory fish and intertidal organisms, as well as habitat for wildlife. Furthermore, given the lack of fringe wetlands in the immediate vicinity of the Site, this system has the potential to provide the area with a variety of other environmental and social values such as sediment trapping, aesthetics, and educational opportunities. Potential use of fill material from historic filled tidelands and channels to build the fringe wetlands offers the further opportunity to improve river and associated wetland habitat in the vicinity of the Site, as well as improve habitat at the site of fill removal.

Much of the river bank abutting the western portion of the Site is comprised of steel sheet pile bulkhead and concrete bulkhead founded on timber piles. The existing steel sheet pile bulkhead consists of three different sections of wall that range in exposed wall height from approximately 12' to 15.5' high. From south to north, the following sheet pile configuration exists at the Site (Figure 2):

- Approximately 270 feet (ft) of the steel sheet pile wall was constructed in 1974 and consists of external double, back to back, 1 ft deep "c"-channel walers (i.e., horizontal beams used to brace or support the upright members), with tie rods spaced at approximately 12 ft-3 inches (in).
- The next section of the sheet pile wall is approximately 180 ft long and was constructed in the 1980's. Based on available drawings the "newer" steel sheet pile bulkhead has an internal bracing system that consists of double, back to back, 1 ft deep "c"-channels with tie rods.

- The northernmost (approximately 260 ft) steel sheet pile wall was constructed around 1936. This section of the bulkhead consists of steel sheet piles and an assumed internal bracing system with tie rods similar to the newer sheet pile section.

The bulkhead changes to an existing concrete bulkhead founded on timber piles north of the 1936 steel sheet pile bulkhead. This concrete bulkhead appears to be the original wall and runs behind the steel sheet pile bulkhead. This concrete bulkhead continues north for quite some length, beyond the northern extent of the Site.

Figure 2. Bulkhead Enhancement Plan View

All of these bulkhead structures must remain on the Site in order to preserve the structural integrity of the Site; therefore, there is no opportunity to transition these bulkheads from a hard armored structure to a vegetated bank or terraced wetland. Furthermore, the dynamic nature of the river (e.g., this region is subject to hydraulic stresses, tidal action, propeller wash, ice scour and damming, etc.) creates considerable technical challenges relative to planting of emergent hydrophytes on the westerly (river) side of the bulkhead. Several fringe wetland bioengineering options were evaluated relative to their ability to withstand the conditions and shear stresses present in the Hudson River adjacent to the Site. Conceptually, the preferred option will likely consist of a multilayer system composed of a leveling layer, armor layer and planting layer. Conceptual details of such a system are presented below; however, the final configuration will be dependent on details of the sediment remediation program in the river.

- Fringe wetland construction will begin by placing a leveling layer on the native sediment. The leveling layer will be composed of clean sand or sediment, preferably from historically filled tidelands and channels, as described in Section 3.4. The purpose of the leveling layer is to bring the sediment surface to the appropriate slope and elevation while also providing a stable, uniform foundation for the armoring layer. The armoring layer will likely be “keyed” into the slope for geotechnical stability. This means that the leveling layer would likely not start at the sheet pile wall, but would instead start roughly two feet from the wall and would extend downslope for 8-10 ft. An armoring layer will be placed over the leveling layer and the area at the foot of the sheet pile will be backfilled, locking the armor layer in place. It is possible that a geotextile layer will be placed between the leveling layer and the native sediment if field testing shows that the native sediment is not competent to support the leveling layer. It is envisioned that the leveling layer will be placed in sections and covered with the armor layer to avoid scour rather than placing the entire length of the leveling layer first and then armoring it.
- In addition to providing scour protection, the armor layer needs to be compatible with supporting the fringe wetland. This means that the armor layer has to be porous or to have open spaces that can anchor sediment in a fashion that will provide habitat for marsh flora and fauna. The armor layer also should be aesthetically pleasing when exposed, should be relatively easy to install and maintain, should have a low risk of failure, and should be cost-effective to install, monitor, and maintain. Several technologies meet these requirements to various degrees.
- The role of the armor layer will change as the wetland matures. Initially the armor layer may be exposed or just under the sediment surface and will serve to prevent scour and to protect the new plantings. As the plants become established, it is envisioned that they will serve to slow the riverine current and create a depositional environment that will bury the armor layer under newly deposited sediment. At this point, the armor layer will serve to protect the slope from scour due to high-energy events such as flooding or prop wash, or from ice scour.
- A planting layer will cover the armor layer and will be comprised of substrate compatible with the selected plantings and able to withstand the anticipated water velocities.

The selected conceptual approach employs articulated concrete block (ACB) mattresses. Figure 3 presents a conceptual drawing of this technology, and Figure 4 presents a conceptual engineering cross-section. Most ACB mattresses are made of pre-cast concrete blocks tied together to form a mat. Each block has a hollow or open space in the middle that runs through the block from top to bottom, so that there is a space to fill with clean sediment and to plant seedlings. The amount of open space varies by block type and manufacturer, but is typically around 30% of the mattress. ACB mattresses are attractive because they can be designed with flexibility in the along shore and across shore directions.

Figure 3. Artist's Rendering of Fringe Wetland

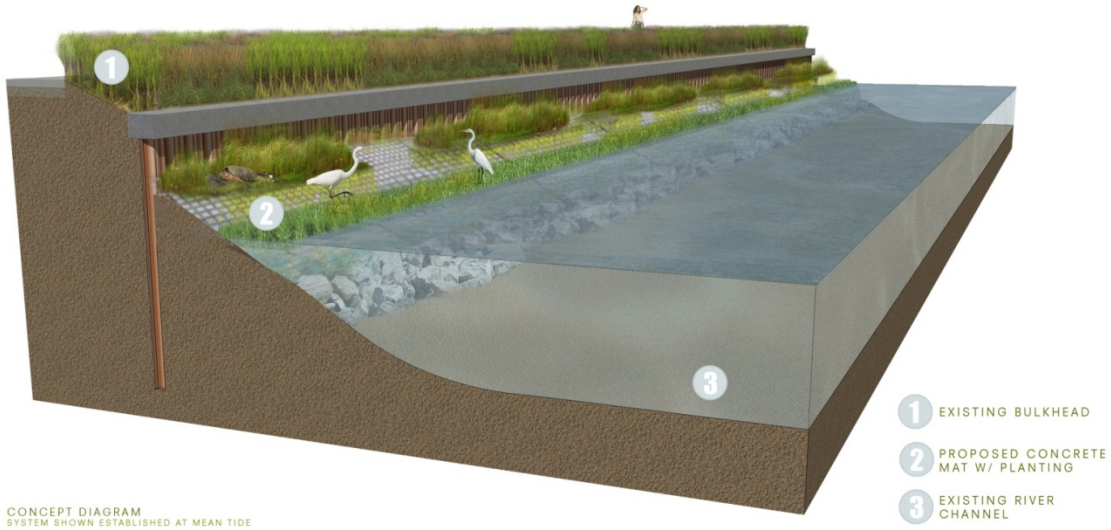

Note: Figure Depicts Flexible Concrete Mat with Vegetation Growing in Cells without Concrete

Figure 4. Conceptual Cross-Section: Fringe Wetland

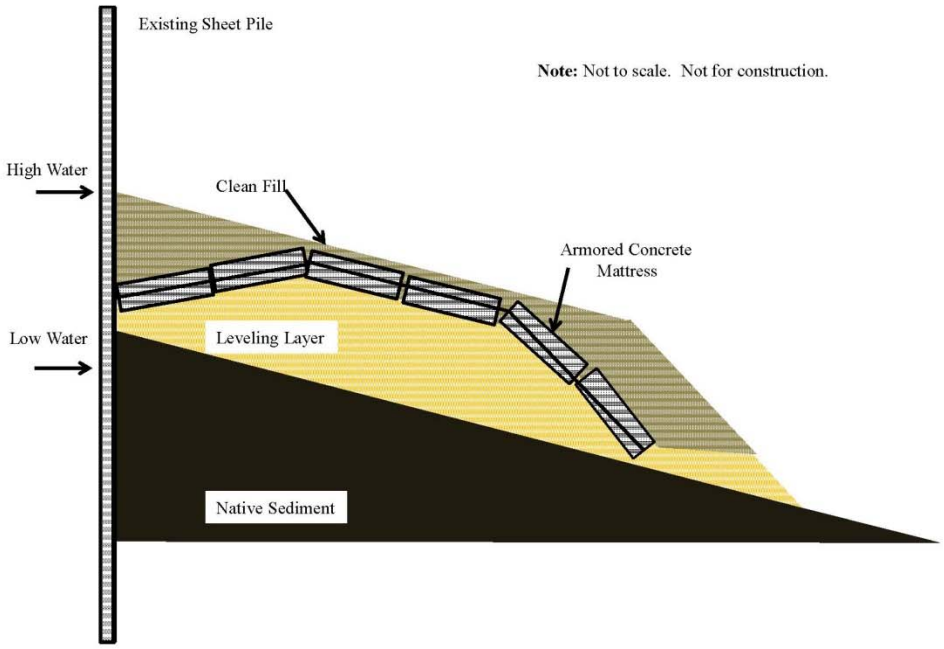

The conceptual design is based on placement of ACB mattresses similar to the M4540 by Submar, Inc. (spec sheet included in Appendix A). The M4540 is a 4-in thick mattress. The open spaces in each block encompass 30% of the total area on the top of the block and taper down to 20% of the total area on the bottom of the block. The mattresses will be delivered to the Site by truck in 10 ft x 10 ft pre-assembled sheets. They will be lifted off the trucks by a crane using a spreader-bar, a steel frame that supports the mattress while it is suspended, and then placed on the leveling layer. Prior to placing the mattress, it is general practice to cover the underlying sediment with a polypropylene geotextile liner with an apparent opening size of about 0.017 in (0.5 millimeters (mm)). While it is likely that a geotextile liner will be employed, more analysis will be required to choose the appropriate geotextile fabric based on the grain size of the material in the leveling layer. The design currently calls for placing sheets of geotextile weighted with chain or steel rod over the leveling layer prior to placing the mattress. The sheets will be 10 to 12 ft wide and 50 to 100 ft long. The length of the sheet will depend on how many mattresses can be placed in a day, as any uncovered fabric could drift and tangle during tidal cycles.

The leveling layer will not extend to the toe of the sheetpile, but will instead end short of the toe, leaving a shallow trench adjacent to the sheetpile. The mattresses will be placed so that the two edge blocks of the mattress dip into the trench. The trench will then be backfilled with sand or sediment, which will lock the mattress in place. Similar backfilling at the toe of the mattress with stone will further stabilize the mattress. The mattress would not be anchored to the sheetpile wall. The individual mattresses will be chained or bolted together to form a single monolithic armor layer across the slope. Figure 4 shows a cross section of the mattress system. The final elevation of the newly constructed fringe wetland system at the toe of the sheet pile wall will be roughly equal to the high water mark, with a strip of sediment exposed as the tide falls. The final elevation and slope will be designed to match that of other naturally vegetated areas in the river floodplain. It is expected that most of the new slope will be wadeable at low tide, which will allow planting seedlings in a hydric soil substrate either in the backfill at the base of the sheetpile and at the toe of the slope or in the holes in the mattress blocks in the middle section of the fringe wetland.

Seedlings of native hydrophytic and semi-aquatic plants are the most likely candidates for re-vegetation in this area. The selection of plants will be matched to the percentage of time the substrate is to be submerged. The substrate in the open cells will be a locally obtained wetland soil sufficiently dense to stay in place until the root matrix of the plantings is established. Standard procedures call for established seedlings in biodegradable pots to be placed in the sediment-filled spaces of the armor layer, rather than placing bare root seedlings. This will provide protection from high flow events and should reduce shock to the seedling, enhancing survival rates. Tubers of *Nymphea odorata* may also be planted. Rhizomes of freshwater tidal species such as *Typha latifolia* (common cattail) or *Scirpus fluviatilis* (river bulrush) may also be planted at the toe of the sheet pile wall to provide food and habitat as well as soften the wall. Ideally, the plants will be placed in spring or early summer to provide time to become established during the growing season. Monitoring at the end of each growing season will include plant survival, and will also look for evidence of sediment deposition or scour. Monitoring will continue for a five year period after the planting to ensure that the plant community becomes established. Vegetation metrics to be evaluated will include density, percent community composition, diversity and dominance.

2.2 Wildlife Ramp

Two wildlife ramps will be installed along the bulkhead in order to ecologically link the riverine habitat and the newly installed fringe wetland to the upland areas (and the recently installed wooded buffer zone [see Section 4]). Constructed of logs adjacent to the sheet pile, wildlife ramps will allow wildlife to easily ascend from the river into the upland buffer zone woody habitat and descend back to the

fringe wetland system. This installation will provide ecological continuity between the river and upland habitats, and would potentially be used by birds, amphibians, reptiles, and small mammals. Existing conditions (i.e., the sheet pile bulkhead) do not allow for free access between the fringe wetland and the upland areas. The two habitats are isolated from each other along the entire length of the bulkhead, except for a small wooded parcel at the extreme southern end of the site.

It is envisioned that the two ramps will be constructed of two 12-in diameter logs (oak, cedar or cypress) tied and/or bolted together to simulate fallen trees. Directly attaching the logs to the sheet pile wall is not advisable as the wall could be damaged if ice or floating debris is caught by the logs. Instead, the ramp will be tied to a poured concrete pier or a pile at the bottom and land-based anchors at the top. The top of the log ramp will be supported by a steel rod inserted transversely through the logs. One end of the rod will terminate in a pile driven next to the sheet pile, while the other end will terminate in a stone or wooden element that is anchored to the ground behind the sheet pile. A second pile or concrete pier will be located at the bottom of the ramp to keep it oriented parallel to the sheet pile (Figure 5 depicts a conceptual rendering of the ramp). The angle of the ramps will be between 3:1 and 4:1. Because the bark will be left on the logs, it is anticipated that some vegetation will colonize the ramps as the logs age. The vegetation on the ramp, overhanging vegetation on the bulkhead, and vegetation on the constructed intertidal marsh will soften the aesthetic impact of the sheet pile wall while also providing fringe habitat for wetland species. The ramps will be monitored for a period of five years and repaired or replaced if it is determined that they are not functioning as designed.

2.3 Riverfront Buffer

Riverfront buffers serve as natural filters for water, critical habitat for many semi-aquatic species and as shade for nearshore riverine organisms. In 2010, BASF planted a 50 foot wide buffer at the top of the bulkhead with a mixture of native shrub and tree species to replicate a natural riverfront buffer (Figure 6 presents additional detail regarding the riverfront buffer system). This buffer will become increasingly valuable over time as a water quality buffer and as habitat grows and becomes denser. It is anticipated that this buffer will be used by both upland species and semi-aquatic species of birds, amphibians, reptiles, and mammals. Organisms will be able to move freely between the river and the upland buffer through the existing wooded waterfront section at the southern end of the site and the wildlife ramp described in Section 2.2. Although this feature provides substantial ecological benefit, it is understood that this element is not viewed by the Department as compensation for natural resource injuries at the Site.

2.4 On-Site Pond

In 2010, as part of the lagoon closure process, a 0.5 acre freshwater pond with a fringe wetland was constructed at the southern end of the Site adjacent to the riverfront buffer (Figure 6). Prior to Site development, the waterfront in the vicinity of the Site would have had a series of berms and ponds formed in response to fluctuations in river water level. Due to bulkheading and development along the river in the vicinity of the site, this type of pond habitat is now locally rare. This constructed pond in close proximity to the river restores some of the ecological functions of these historic ponds to the Site. The pond is expected to support aquatic plants, aquatic insects, small fish species, amphibians, reptiles, waterfowl, and mammals as it matures. Several of these species have already been observed. The direct connection with the river offered by the riverfront buffer described in Section 2.4 enhances the value of the pond as an “off river” refuge for waterfowl, amphibians, retiles, and mammals. The pond is adjacent to the small portion of the Site that is not bulkheaded, which further facilitates movement of organisms to and from the river to the pond. Although this feature provides substantial ecological benefit, it is understood that this element is not viewed by the Department as compensation for natural resource injuries at the Site.

Figure 5. Artist's Rendering of Wildlife Ramp

Figure 6. River-Front Buffer Strip and Pond

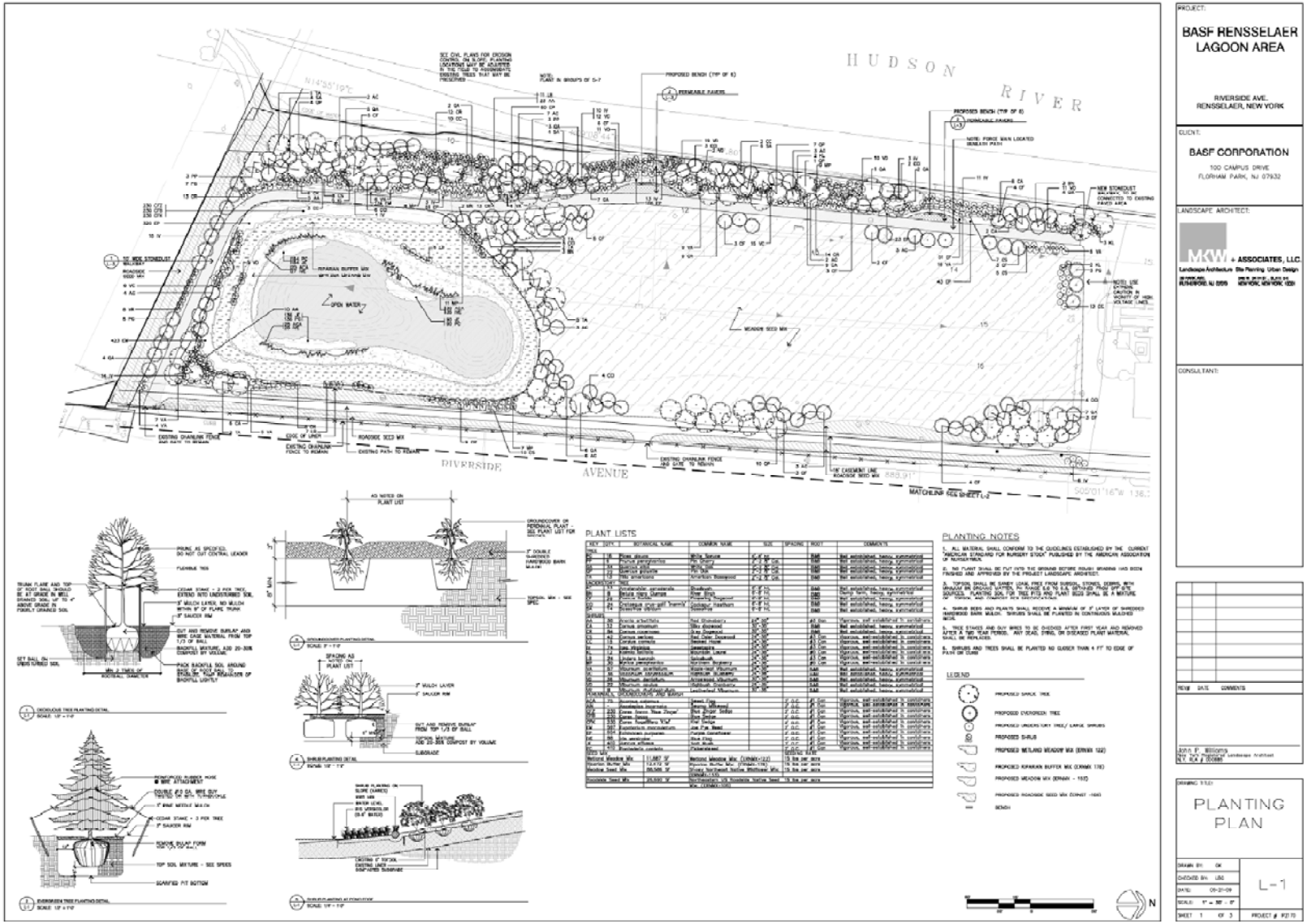

3.0 Program Element 2: Off-Site Ecological Enhancements

The second element of the program involves an off-site high visibility ecological restoration project with direct links to the Hudson River ecology and to nature center operations. Several high-visibility restoration initiatives have been preliminarily identified in the Papscanee Island Nature Preserve, a major freshwater wetland and tributary system located along the upper Hudson River, approximately 3 to 5 miles south of the Site.

The Papscanee Marsh and Creek system is primarily a floodplain wetland area, encompassing a tidal creek system, emergent marshes, freshwater tributaries, old fields, agricultural in-holdings, and deciduous woodlands. This system provides a variety of fish and wildlife related recreational uses for residents of the Capital District. According to NYSDEC FWS[1], "Papscanee Marsh and Creek is the northernmost major wetland area in the Hudson River estuary and is located on the east side of the Hudson just south of the city of Rensselaer at river kilometer 222 (river mile 138). The marsh and backwater extend south for some 6.4 kilometers (4 miles) and are bordered on the east by New York State Route 9J and on the west by the railroad. West of the railroad is a palustrine scrub-shrub swamp. Sections of two tidal creeks, the Moordener and Papscanee, provide spawning and nursery habitat for anadromous and resident freshwater fish as well as for a reported population of map turtles. Besides using this habitat for feeding and resting during migration, many bird species nest here; these include least bittern, green-backed heron, Canada goose (*Branta canadensis*), American black duck, wood duck, mallard, Virginia rail, common moorhen, spotted sandpiper, common sandpiper, swamp sparrow, marsh wren, and belted kingfisher. The deepwater main channel of the Hudson River bordering Schodack-Houghtaling and Shad and Schermerhorn Islands, and Papscanee Marsh and Creek is spawning area for shortnose sturgeon north to Troy."

The Papscanee Island Nature Preserve, encompassing more than 300 acres, is located at the northerly end of the Papscanee Marsh and Creek system (Figure 7). This preserve is owned by the Open Space Institute (OSI), a private non-profit organization dedicated to protecting scenic, natural, and historic landscapes to ensure public enjoyment, conserve habitats, and sustain community character. The Papscanee Island Nature Preserve includes a variety of habitat types, as well as seven miles of trails and limited interpretive signs to help educate visitors[2]

[1] http://library.fws.gov/pubs5/web_link/text/upp_hud.htm

[2] http://www.osiny.org/site/PageServer?pagename=Capital_Papscanee_Island

Figure 7. Papscanee Island Nature Preserve and Site

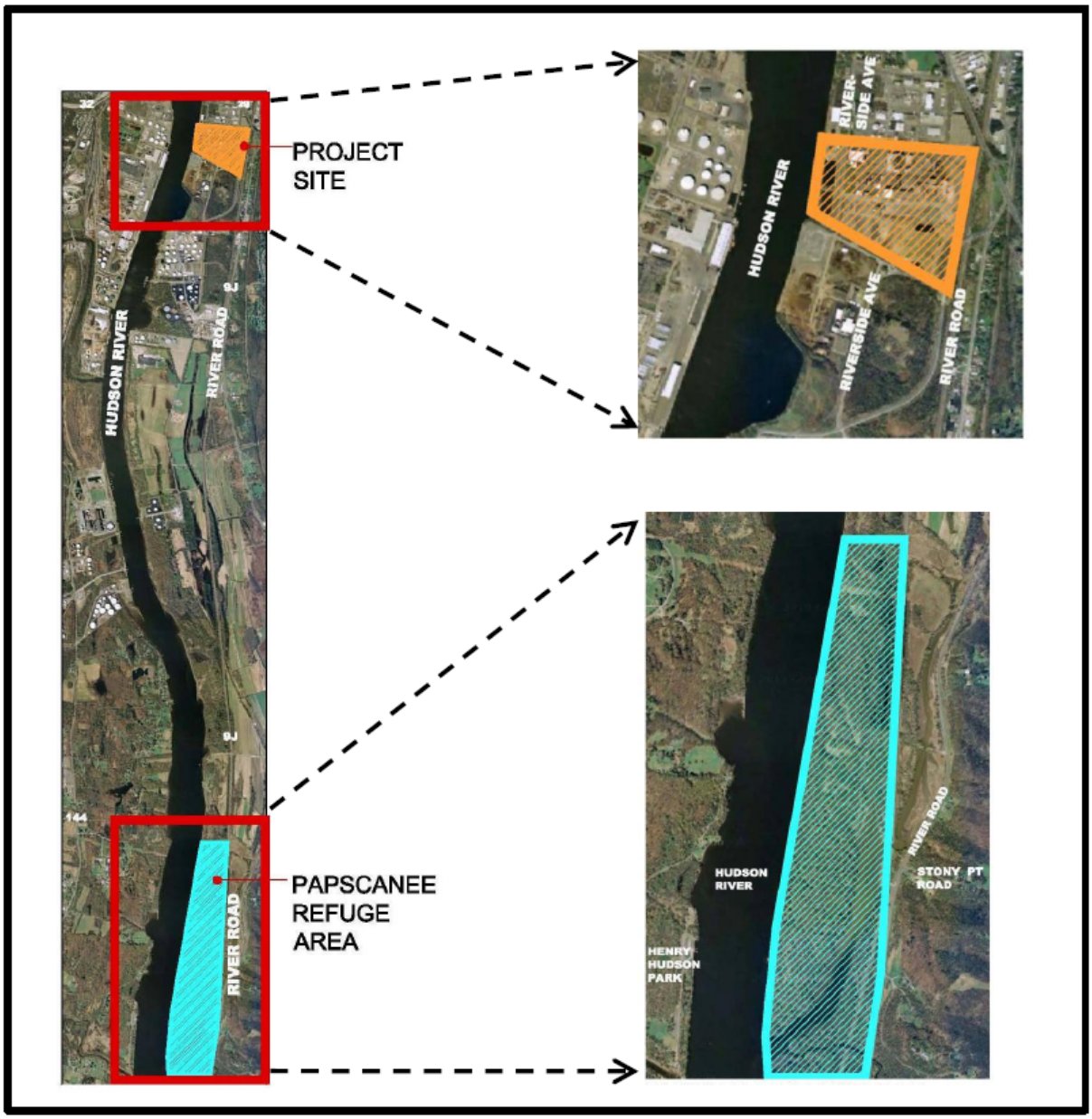

Based upon an initial review of this off-site parcel and communications with OSI and representatives from Rensselaer County, the following series of potential Papscanee Island Nature Preserve mitigation/ecological enhancement items related to ecological services have been identified. A meeting between BASF representatives and OSI was held on September 2, 2011 to refine the scope of work for the Papscanee Island Nature Preserve mitigation/ecological enhancement program. Both the County and OSI endorse the off-site ecological enhancements identified in this Work Plan and are working closely with BASF to prioritize the list of ecological enhancements relative to their needs.

3.1 Papscanee Island Nature Preserve Master Plan

No comprehensive master plan exists for management of the 300+ acre Papscanee Island Nature Preserve. Such a plan would be useful to define the natural resources at this important ecological resource, and to recommend policies and actions to preserve the Papscanee Island Nature Preserve's resources for future generations. As an initial off-site mitigation effort, BASF will facilitate the development of a Natural Resources Management Plan/Master Plan to discuss and provide recommendations relative to natural lands management; urban forest management; native vegetation; invasive plant species; geological resources; archeological and cultural resources; fish and wildlife resources; preserve management and planning concerns; land acquisition and conservation easements; cooperative management opportunities; partnership development; and natural resources education.

This Master Plan will include the following elements:

- Focused Resource Inventory: focusing on natural resources (e.g., habitats, communities, and species), trails, facility, and land use.
- Needs Assessment: focusing on habitat and species-specific needs, land use and buffer zones, access, facilities, and recreational/programming needs.
- Prioritization: priorities for management at the preserve would be assigned based on short- and long-term projections, need, and cost

It is anticipated that the plan would include short-term recommendations (< 5 years), long-range planning elements, and opportunities for training and local community participation. The Master Plan would be prepared by a BASF-funded graduate student at a local college or university, or by a local non-profit group (with funding from BASF). BASF will produce the Master Plan no later than 18 months after finalization of the NRD Restoration Plan and NYSDEC issuance of the NRD order.

3.2 Papscanee Island Nature Preserve Ecological Enhancements

Depending upon the results of the Master Planning initiative and the continuing dialogue between OSI, Rensselaer County, and BASF, a series of ecological enhancements/improvements will be implemented at the Papscanee Island Nature Preserve. These initiatives will focus on management of invasive plant species in vernal pools at the preserve, vernal pool trash and debris removal, and rare species re-introductions (as appropriate). In order to coordinate Papscanee restoration activities with NYSDEC ecological management stakeholders, BASF has initiated contacts with a NYSDEC Region 4 wildlife biologist (Nancy Heaslip) and is awaiting feedback regarding the Papscanee Island Nature Preserve mitigation/ ecological enhancement effort.

3.2.1 Vernal Pool Invasive Species Management

Vernal pools are a prominent feature of the Papscanee Island Nature Preserve. By definition, a vernal pool is an isolated, intermittent body of water that does not have fish. These pools provide breeding

and rearing habitat for waterfowl, amphibians, mammals, reptiles, and birds as well as many species of plants. In the Rensselaer area, these pools were likely much more common before development of the riverfront. As a result, the continued existence and function of these pools at Papscanee is critical to the ecological integrity of the area. The Papscanee Island Nature Preserve currently features several vernal pools as well as floodplain pools that may function as vernal pools during times of isolation from the river. However, the function of some of these pools has the potential to be compromised by the presence of invasive aquatic and semi-aquatic plants. The first step in this effort is to carefully inventory the vegetation in the vernal pools and identify aquatic and semi aquatic species with the potential to degrade the function of the vernal pools. Among those plants, *Phragmites australis* is one of particular concern due to its prevalence in the immediate area, its ability to rapidly colonize new areas once introduced, and its low value as habitat for many vernal pool species. Following the inventory, and prior to implementation of any other field activities, a detailed SOP will be developed for NYSDEC review: this SOP will document the protocols and procedures to be employed for both the trash removal (Section 3.2.2) and invasive species management efforts. BASF has developed an invasive species control program at the on-site nature center consisting of monitoring and targeted control that will be extended to Papscanee to protect the vernal pool habitat.

BASF will include funding for Cornell University's Ecology and Management of Invasive Plants Program as a part of the invasive species management program. This funding would be targeted towards development and implementation of biological controls for common reed (*Phragmites australis*) and could potentially be used to support a graduate student or research scientist. Funding biological control research represents a long-term commitment to invasive species management with potential widespread benefit.

It is anticipated that invasive species control in these ponds will occur once annually with a duration of five years (e.g., five invasive species control management events are included in this work plan). BASF will coordinate any invasive control efforts at Papscanee with the NYSDEC Office of Invasive Species Coordination. The master plan for Papscanee will include a discussion of how BASF will assist NYSDEC, Rensselaer County and the Papscanee trustees (Open Space Institute) in investigating opportunities for future funding and partnerships for the period following completion of BASF's financial commitment to this project element.

3.2.2 Vernal Pool Trash and Debris Management

The appearance of the Papscanee Island Nature Preserve is directly correlated to how people use and appreciate it. In other words, a preserve with visible trash and debris will decrease perceived value and invite further littering while a natural looking, trash free environment will tend to increase the perceived value and discourage additional littering. It is anticipated that the trash and debris management effort would be organized by BASF and that BASF would work with volunteer groups to provide labor. BASF would then be responsible for collecting and disposing of removed litter. A program of awareness through publicity and signage may keep future debris removal activities to a minimum although it is expected that debris and litter that is deposited by the river during high water events will persist and need to be periodically picked up. A detailed SOP will be developed for NYSDEC review: this SOP will document the protocols and procedures to be employed for the trash removal. It is anticipated that this program would occur once annually with a duration of five years (e.g., five trash and litter management events are included in this work plan). BASF will coordinate activities with NYSDEC, Rensselaer County and the Papscanee trustees (Open Space Institute) to develop a plan for continuation of these activities beyond the initial five years.

3.2.3 Osprey Platform

The Hudson River Valley supports a significant diversity of birds, including many species of regional and continental conservation concern. In order to enhance avian ecology in the region, BASF will erect an osprey (*Pandion haliaetus*) nesting platform along the banks of the Hudson River at the Papscanee Island Nature Reserve. The osprey is a state-listed Species of Special Concern in New York.

The osprey platform will be constructed to provide suitable nesting habitat (secure breeding grounds) and to preserve and encourage the local osprey colony to expand its Upper Hudson River range. Such platforms are typically constructed to accommodate a typical clutch size laid by the female (one to four, but usually three eggs). Situated along the banks of the Hudson River, the osprey tower will be located where the birds are likely to nest and in close proximity to the osprey's main prey/ source of food (fish).

Due to the instability of the naturally constructed nests and the osprey's penchant for nesting in undesirable habitats, birds nesting on man-made platforms experience a greater chance of survival and success of their young when compared to birds at natural sites. These platforms are sturdy in construction, require no maintenance, and allow a secure location for raising young chicks. Construction of the Papscanee platform is will occur during the late fall, winter, or early spring when the ospreys are at their wintering grounds. It is estimated that this platform will have a useful life of approximately ten years.

The osprey platform will be constructed of cedar lumber to ensure the longevity of the installation. Cedar fibers contain oils that are natural preservatives and prevent rot/ decay. Sticks will be placed and arranged in the nest platform during installation to promote the use of the platform. Anti-predator safeguards may include sheet metal sheathing over the center pole or an inverted cone. The platform will be assembled in accordance with the construction plans contained in Appendix B, adapted from regional specifications such as the Connecticut Department of Environmental Protection's "General Permit for Osprey Platforms and Perch Poles". In addition, the osprey platform construction guidance published by the International Osprey Foundation[3] and the official design for the state of New Jersey[4] will be consulted.

3.2.4 Interpretive Signage

Interpretative signs or exhibits offer information that is designed to stimulate trail or park visitors' interest while challenging their imaginations and presenting new perspectives on familiar topics. Trail or park signage themes, ideas, and facts are presented to visitors to help them more clearly understand the historical significance of the site, the natural world around them, or cultures that may have previously inhabited the site.

The Papscanee Island Nature Preserve boasts over 6 miles of hiking trails, three picnic areas, two educational kiosks, and a limited number of informational signs. The current limited signage is primarily focused on the historical existence of the Mohican tribe and their use of the Papscanee land. There is an opportunity to bolster the signage related to the natural environment at the Papscanee Preserve. As part of this program weather resistant plaques will be installed presenting examples of

---

[3] http://www.ospreys.com/downloads-2/files/OspreyNestPlan.pdf

[4] http://www.cumauriceriver.org/pages/platform/OSPREY%20PLATFORM.pdf

individual species and Hudson River and floodplain habitat types; in addition, wooden framed sign boards will be erected along the trails to help educate and stimulate park visitors.

The following potential candidates for signage have been identified:

- Animal life, such as wood ducks, least bittern, spotted sandpiper, map turtles, etc.
- Vegetative habitats along the trail, such as the large tidal creek, emergent marshes, young woodlands, etc.
- Other natural conditions, such as seasonal variations, viewsheds, rocky outcrops
- Current day activities, such as nearby transportation routes (rail) and recreational uses (hunting, bird watching, etc).
- Safety and preventive measures, such as poison ivy, personal safety, swelling of the creek and river during the winter and spring season, not feeding wildlife, and litter.

BASF will provide the signs and guidance while local volunteers from the community will determine locations and install the signs. Community member or subject matter experts would be incorporated into the design and review process of this project. This approach would produce a finished product more tailored to the needs of the community and visitors.

There are currently a limited amount of maps in the Papscanee Island Nature Preserve that adequately depict the hiking trails and other features. Therefore, an updated map of the Preserve will be developed, utilizing a high accuracy GPS to collect point feature data within the Preserve (benches, information centers, points of interest, etc). The GPS can also be utilized to collect trail data (length of hike, change in elevation, etc) for presentation. This survey will be conducted using a Global Positioning System (GPS) with Real-Time-Kinematics (RTK) capabilities or equivalent (accuracy to +/- 0.05 ft). The end product will be a full color map of the trails of the Nature Preserve complete with detailed information about each trail. These will be printed poster size and hung on each of the wooden framed sign boards around the Preserve. This signage program will develop and install up to 10 interpretive signs and/or maps over the course of the five year program.

3.3 Map Turtle Population and Potential for Re-Introduction Study

The Papscanee Island Nature Preserve area may provide current habitat for and/or an opportunity to reintroduce at-risk turtle species such as the Northern map turtle (*Graptemys geographica).* Focusing restoration efforts on at-risk turtle species provides stakeholders with a species with strong linkage to ongoing regional environmental education efforts, high visibility, and a high degree of stakeholder interest. While relocation of turtles is often not recommended due to the strong homing instinct of many species, relocation in the context of “head-starting” turtles may be possible, and it is possible that a Papscanee Island Nature Preserve restoration effort could be linked to a turtle head-starting and reintroduction effort (the concept of turtle “head-starting” is discussed further in Section 4.1 of this Work Plan). The Papscanee Island Nature Preserve covers more than 300 acres, and includes several vernal pools and floodplain ponds, as well as alluvial deposits that are well suited to turtle nesting.

BASF has coordinated turtle re-introduction planning efforts with a regional expert, Mr. Alvin Breisch, and will be retaining Mr. Breisch as a technical expert and advisor regarding this component of the NRD program. Mr. Breisch recently retired from his position as the former NYSDEC state herpetologist and is currently editing the NY Herpetological Atlas. Mr. Breisch, in his capacity as a technical expert and advisor to this component of the BASF NRD program, made the following

observations relative to a map turtle population and potential for re-introduction program in this portion of the Hudson River estuary:

(1) The Papscanee Island Nature Preserve is not likely suitable for box or spotted turtle re-introduction, but does have potential to provide map turtle habitat (map turtles are a declining species in NY state);

(2) There are potentially several other areas in the Upper Hudson that would benefit from turtle re-introduction efforts;

(3) Map turtle populations occur to the north and south of BASF Rensselaer, but there is little to no information regarding whether or not these populations communicate ecologically with one another; and

(4) There is a pressing scientific need for a map turtle study in the Upper Hudson River to help document the most appropriate conservation measures for this declining species.

Given these observations, BASF has included the following phased program. Initially, under Mr. Breisch's direction, BASF will coordinate a map turtle study in the Upper Hudson River, with a focus on documenting the presence/absence of this species, and ascertaining the best approach for re-introduction of this species into the area. It is envisioned that elements of this study will be conducted by a local university, with research funding and oversight provided by BASF. Once the first phase of this study is conducted, BASF will coordinate with NYSDEC to develop subsequent phases of the study that will attempt to gather data relevant to observations 3 and 4 above, including whether map turtle populations in this area communicate ecologically with one another, where these populations may nest, and where locations for possible turtle re-introduction or habitat enhancements would be most appropriate. Finally, a turtle re-introduction program will be initiated with a goal of releasing 5 to 10 head-started turtles per year over five years to help establish a map turtle population in the Papscanee Reserve (or elsewhere, depending upon the study results).

BASF will perform the turtle reintroduction work in phases with Department consultation at critical milestones as the project progresses. Turtle reintroduction would only be considered if it is determined to be advisable after the map turtle study is completed and after consultation with the Department and others.

If turtle reintroduction is conducted, BASF will develop a supplemental plan that will outline recommended map turtle habitat management activities that may include: 1) elimination of barriers that hinder migration between ponds and nest or hibernation sites, 2) construction of barriers to keep turtles off highways and other hazardous environments, 3) placement of "turtle crossing" signs to warn motorists of the turtle's presence in key areas, and 4) maintenance of open areas for nesting.

The BASF on-Site Education Classroom (see Section 4.0 of this Work Plan) will be an integral part of this effort, serving not only as a source of rearing and holding space but also as a center for monitoring any recovering populations. Specific opportunities to accomplish this would need to be further evaluated in conjunction with NYDEC staff and would likely need to be preceded by an inventory of existing populations of turtles and available habitat in the Papscanee Marsh. It is possible that BASF could collaborate on this effort with regional and local experts in addition to Mr. Breisch (e.g., Syracuse University, SUNY Albany, Bronx Zoo, Cornell University, or another college or university) who have been active participants in the New York turtle conservation and head-starting community.

This project element will proceed in an adaptively managed fashion as data on early phases are obtained. BASF and the Department may mutually agree to replace elements of the project with elements of a similar scale if early data support a change in project scope.

3.4 Historic Dredge Fill Removal

According to sources such as Miller et al. (2006) and Collins and Miller (2011), the Hudson River has a long history of channel modifications that have substantively altered ecosystem function and structure. These alterations have included dredging and filling operations to enhance the navigational use of the river, shoreline hardening activities, and dam construction/operation. In the vicinity of the Rensselaer Site, there are numerous locations where historic side channels and wetlands have been filled with material dredged from the main river channel as part of operation and maintenance of the federal navigational channel. Removal of fill from these locations could restore wetlands and secondary channels and has the potential to significantly improve spawning, nursery, and refuge habitat for resident and migratory fish species.

In response to a request from NYSDEC, BASF will evaluate Hudson River fill removal projects in the context of the overall remedial planning for the Site. As part of the over-all Hudson River Operable Unit Site Closure Process, it is recognized that some dredging and/or capping of Hudson River sediments will likely be required in the nearshore environment at the Site. If it is logistically and economically feasible (i.e., practical), and if the NYSDEC deems the fill material as suitable for in-river beneficial re-use relative to contaminant residuals management, BASF will further evaluate sourcing fringe wetland construction material, remedial dredging backfill and capping materials from historic in-river fill sources. Use of fill material represents an innovative and sustainable approach to on-Site sediment management.

The locations of the historic fill sites to be restored will be determined by BASF and NYSDEC collaboratively. In order for this element of the NRD program to proceed, removal of fill material must be practical when compared to alternatives for obtaining fill for the fringe wetland construction and dredge remediation, and the material must have the proper geophysical and chemical properties for removal and re-use. From the NYSDEC perspective, the areas to be restored must have the potential to have high ecological function and be in places that are consistent with long term ecological restoration strategies. It is recognized that this element of the NRD settlement will require considerable collaboration between NYSDEC and BASF and will need to be adaptively managed. If the removal of fill material is determined by BASF or NYSDEC to be impractical for this purpose, BASF and the NYSDEC will mutually agree to replace one or more of the elements of the historic dredge fill removal project with a project that is scaled to the ecological service loss for which this element of the program was intended to compensate. Preferred replacement projects would restore the Hudson River's resources by re-creating or re-connecting habitat, and examples would include, but not be limited to, replacement or rehabilitation of fully or partially impassable culvert(s), and removal or modification of a barrier to fish passage.

The amount of material removed from these historic fill sites will be scaled to the need for material for construction of the fringe wetland (Section 2.1), if permittable, and the need for materials to backfill and cover BASF remedial response action locations in the river.

4.0 Program Element 3: BASF Education Classroom

On-going and future educational programming at the BASF Rensselaer Educational Classroom represents the third link of the natural resource restoration program, and is consistent with NYSDEC DER-31 policy concepts such as “fostering green and healthy communities and working landscapes which balance ecological, economic and social goals; and integrating the remedy with the end use where possible and encouraging green and sustainable re-development”.

The Educational Center complex includes both the LEED-certified educational classroom, as well as the recently constructed 10-acre wildlife refuge, which includes approximately 7.5 acres of upland meadow and a 2.5 acre wetland complex (Figure 8). Neither development of the LEEDs-certified Education Center and 10-acre wildlife refuge nor providing educational funding were required in order to comply with NYSDEC closure requirements for OU-1.

BASF’s educational effort at the on-Site education classroom will be tied into ecological mitigation efforts described in prior sections of this Work Plan (e.g., fringe wetland creation, turtle conservation, etc.). For instance, the turtle head-starting effort described below is often the type of project that is done collaboratively with local nature centers and other non-governmental organizations, with oversight and support from state trustees. Such programs will be used to provide a valuable bridge between the community, the Hudson River, and the on-Site and off-Site restoration efforts at the bulkhead and the Papscanee Island Nature Preserve, respectively. As described in Section 3.3 of this Work Plan, BASF has initiated contacts with the former NYSDEC state herpetologist (Mr. Alvin Breisch) and will be retaining Mr. Breisch as a technical expert and advisor regarding this component of the NRD program. As part of this program, BASF is committed to providing five years of educational funding for Hudson River interpretive programs, and other educational programs focused on the ecology, natural, and cultural resources of the Upper Hudson River Valley. This funding will be used to provide about 10 one-day programs per year. These programs will include a professional outdoor educator, materials as well as indoor and outdoor space for instruction. The estimated 50 one-day educational programs (10 programs per year over 5 years) represent a substantial commitment above and beyond what BASF was committed to providing at the on-Site educational classroom in the absence of an NRD resolution. BASF is also committed to prepare a plan to provide a road map for longer term integration of the Educational Center operations into the Rensselaer schools and educational programming.

BASF is committed to working with the other parties to pursue funding that will allow this element of the project to continue after BASF’s five year commitment is completed. The completion report for this element of the NRD program will include a discussion of how BASF will assist project partners in investigating opportunities for future funding and partnerships for the period following completion of BASF’s financial commitment to this project.

Figure 8. Education Classroom and Wildlife Refuge

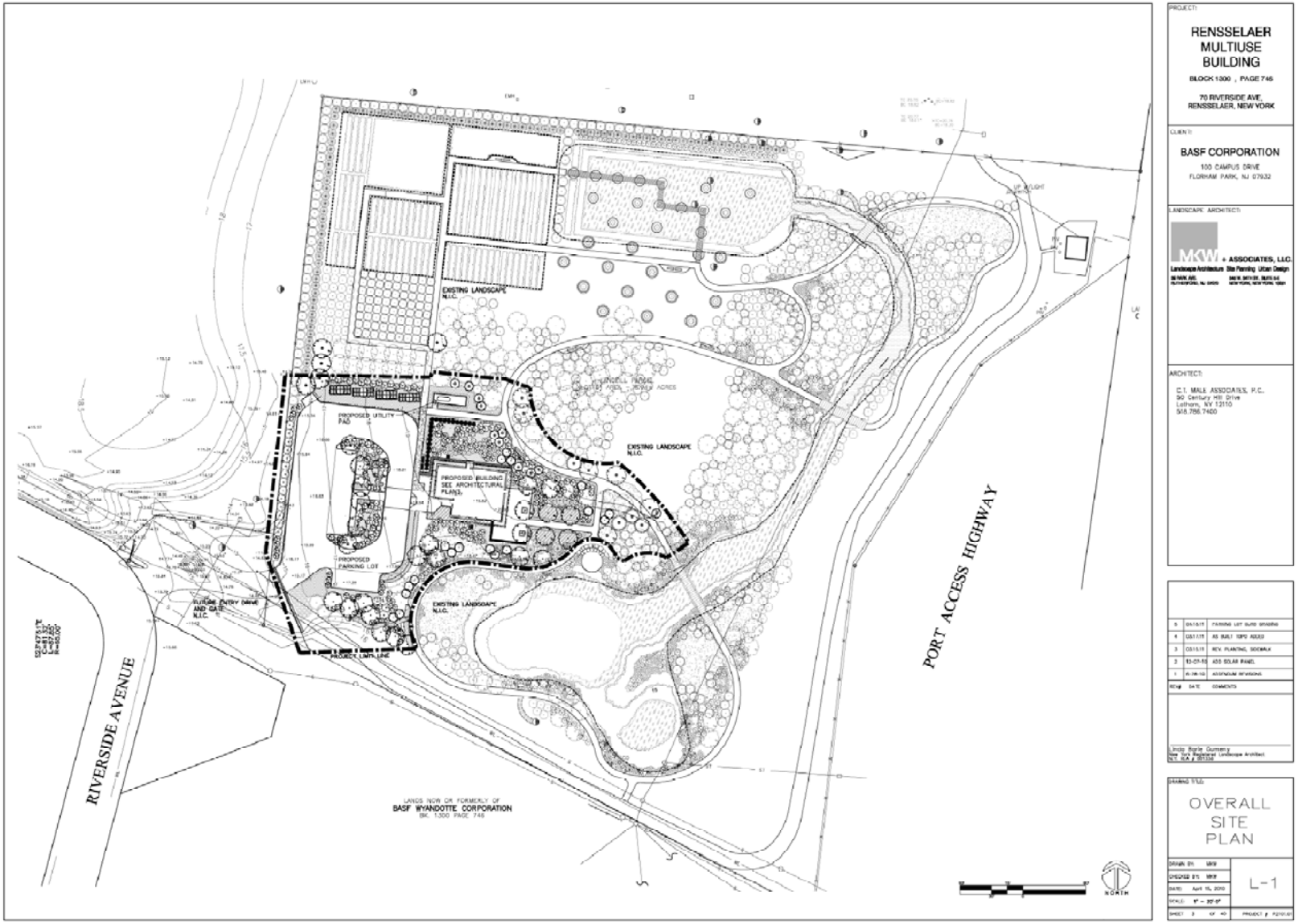

4.1 Head-starting

Rare and endangered turtles such as the spotted turtle and box turtle are present in the Hudson River Valley. Head-starting entails collecting and feeding wild hatchlings until they are significantly larger, and then releasing them into the wild once they have reached a size that minimizes hatchling predation. This gives the turtles a better chance to survive and have hatchlings of their own. At the Bronx Zoo/Wildlife Conservation Park in New York City, spotted turtles are being head-started. Farther north, in Syracuse, bog and Blanding's turtles are being given a better chance at survival. The program described above includes the use of the education classroom in a pivotal role relative to turtle head-starting in the Upper Hudson Valley for a period of five years.

As discussed in Section 3.2.3 of this Work Plan, BASF is working with Mr. Alvin Breisch to coordinate turtle head-starting planning efforts. In addition to the map turtle program described in Section 3, BASF remains committed to head-starting box turtles in the Educational Center for re-introduction at a site other than Papscanee. Furthermore, after touring the Educational Center complex (including both the LEED-certified educational classroom and the 10-acre wildlife refuge), Mr. Breisch recommended that BASF consider addition of another turtle innovative conservation element to the on-site NRD program. This additional element would involve re-landscaping and re-fencing portions of the refuge so that it could be used by box turtles that otherwise could not be released into the wild. BASF believes that a coordinated head-starting program, coupled with use of the refuge by box turtles, would represent a valuable educational as well as conservation opportunity and should be included in the NRD plan. BASF will provide specifications and plans for the Educational Center including information on soils and plantings to the Department to confirm that the site is suitable for use as a Box Turtle refuge.

It is assumed that eggs or hatchlings for the head-starting program will be provided to BASF from an ongoing university, state sponsored or conservation group program. If eggs are provided, they will be incubated in a manner that mimics natural conditions. The hatchlings will be raised and then released back into the re-introduction habitat (at either Papscanee Island Nature Preserve) or an alternative site designated by NYSDEC) when they reach the appropriate size to escape predation (typically about 1 year or more of age).

If possible, mini-transmitters will be attached to a sub-set of the hatchlings prior to release. Telemetry data and behavioral observations gathered from these animals will be compared to that of wild-caught juveniles to measure possible impacts of head-starting as a conservation method.

As described in Section 3.3, BASF's goal is to release 5 to 10 head-started turtles per year over five years to help establish a population at the release site. It is envisioned that the turtle head-starting effort will be conducted by a combination of private non-profit turtle experts, academicians, and wildlife consultants. Further, it is anticipated that once coordination with NYSDEC and Fish & Wildlife trustees is underway, an additional more detailed supplement to this work plan will be prepared to further describe BASF's turtle conservation efforts.

BASF will perform the turtle reintroduction work in phases with Department consultation at critical milestones as the project progresses. BASF and the Department may mutually agree to replace elements of the project with elements of a similar scale if early data support a change in project scope.

5.0 Summary

As described throughout this Work Plan and summarized in Table 1, the programmatic elements provide substantive ecological services both in the short and long-term, and provide linkage to off-Site and on-Site restoration opportunities. Furthermore, these projects, coupled with the extensive recently completed green and sustainable projects at the Site (e.g., construction of the LEED-certified on-Site Education Classroom, 10-acre upland wildlife refuge atop the closed landfill, stormwater management features, and dry meadow lagoon cap) provide an ideal opportunity relative to the Green Remediation initiative outlined in the recent NYSDEC DER-31 policy document. Lastly, BASF is committed to ensuring that many of the activities outlined in this work plan provide value beyond the time frames outlined in this work plan; the completion report for this NRD program will include a discussion of how BASF will assist project partners in investigating opportunities for future funding and partnerships for the period following completion of BASF's financial commitment to this project.

Table 1. Summary of Restoration/Mitigation Projects

Mitigation Project	Description
Program Element 1: River-Based Projects	
Bulkhead Ecological Enhancement	Innovative use of bioengineering technologies to create 5,000 square feet of fringe wetland to "green" the bulkhead at Site. Includes 5 years monitoring.
Wildlife Ramp	Construction of two wildlife ramps to link riverine habitat, fringe wetland, with vegetated upland areas. Includes 5 years monitoring.
Riverfront Buffer	Creation of a 50-ft wide, 600 ft long wooded vegetated buffer at top of bulkhead to provide habitat for nearshore wildlife. This voluntary project has already been planted and is becoming established. Includes 5 years monitoring.
On-Site Pond	Creation of 0.5 acre freshwater pond adjacent to riverfront buffer to support aquatic plants, aquatic insects, small fish species, amphibians, reptiles, waterfowl, and mammal. This voluntary project has already been constructed and is becoming established.Includes 5 years monitoring.
Program Element 2: Off-Site Ecological Enhancements	
Papscanee Island Nature Preserve Master Plan	Preparation of Master Plan for Papscanee Island Nature Preserve to define the natural resources at the preserve, and to recommend policies and actions to preserve the resource for future generations.
Vernal Pool Invasive Species Management	Develop and implement an invasive species control program targeting invasive plants in vernal pools at the Papscanee Island Nature Preserve. Include up to five years of monitoring and targeted control.
Trash and Debris Management	BASF be responsible for collecting and disposing of removed litter from the Papscanee Island Nature Preserve vernal pools and floodplain. Includes five years of trash and debris management.
Map Turtle Migration and Potential Re-Introduction Study	BASF, in coordination with NYSDEC, DFWMR, and other regional experts, will conduct a map turtle population study in the vicinity of the Site. Depending on the results of the map turtle study, rare and endangered turtle re-introduction program may be designed to re-introduce rare turtles to Papscanee Island Nature Preserve or an equivalent area. Goal is to

Mitigation Project	Description
	release 5 to 10 head-started turtles per year over five years to help establish a population in the Papscanee Island Nature Preserve.
Osprey Platform	An osprey nesting platform will be erected at the Papscanee Island Nature Preserve.
Interpretive Signage	Weather resistant plaques to be installed presenting examples of individual species, Hudson River and floodplain habitat types, and other topics at the Papscanee Island Nature Preserve. The program includes up to 10 signs or maps to be installed over 5 years.
Historic Dredge Fill Removal	Removal of material from historically filled wetlands and secondary channels has the potential to significantly improve spawning, nursery, and refuge habitat for resident and migratory fish species. Removal of material to be scaled to fringe wetland construction, if permittable, and BASF remedial dredging backfill and cover needs. If the removal of fill material is determined by BASF or NYSDEC to be impractical for this purpose relative to alternatives for obtaining fill material, or if the material does not have the proper geophysical and chemical properties for the intended in-river beneficial reuse of the material, BASF and the NYSDEC will mutually agree to replace one or more of the elements of the historic dredge fill removal project with a project that is scaled to the ecological service loss for which this element of the program was intended to compensate. Preferred replacement projects would restore the Hudson River's resources by re-creating or re-connecting habitat, and examples would include, but not be limited to, replacement or rehabilitation of fully or partially impassable culvert(s), and removal or modification of a barrier to fish passage.
Program Element 3: BASF Educational Classroom	
Educational Programming	BASF to provide five years of educational funding for Hudson River interpretive programs, and other educational programs focused on the ecology, natural, and cultural resources of the Upper Hudson River Valley. The programs will be based at the on-site nature center. An estimated 10 programs per year is envisioned.
Turtle Head-Starting	BASF, in coordination with NYSDEC, DFWMR, and other regional efforts, will lead a rare and endangered turtle re-introduction program designed to re-introduce rare turtles to an appropriate area. Goal is to use the BASF education center to head-start rare turtles, with a goal of releasing 5 to 10 head-started turtles per year over five years to help establish a population at the release site.

6.0 Literature Cited

Collins, M., Miller, D., 2011. Upper Hudson River Estuary (USA) Floodplain Change over the 20th Century. River Research and Applications, Short Communication, Manuscript ID: RRA-10-0193.R1.

Miller, D., Ladd, J. Neider, W.C., 2006. Channel Morphology in the Hudson River Estuary: Historical Changes and Opportunities for Restoration, American Fisheries Society Symposium 51, Bethesda, MD

Appendix A

Submar 4540 Technical Specifications

Technical Library for UltraFlex & UltraLok

Submar® Synergy happens when our products compliment nature.

Erosion control solutions require more than just time-tested products. Our systems have been hydraulically tested in strict compliance with FHWA, ASTM and NCMA standards. Our technical expertise and experience in the proper application of these products result in long-term solutions while protecting nature.

UltraFlex

UltraFlex Revetment System Specifications

Unit		Dimensions			Coverage Area SF/Unit	Unit Weight (LBS)	Weight (PSF)	Open Area %	
Size	Style	L	W	H				Bottom of Unit	Top of Unit
M4540	Open	17.1	11.9	4.5	1.33	42-49	32-37	20	30
M4545	Closed	17.1	11.9	4.5	1.33	53-61	40-46	10	15
M6050	Open	17.1	11.9	6	1.33	61-72	46-54	20	30
M6055	Closed	17.1	11.9	6	1.33	72-83	54-62	10	15
M9070	Open	17.1	11.9	9	1.33	91-108	65-75	20	30
M9085	Closed	17.1	11.9	9	1.33	108-124	78-91	10	15
XL4540	Open	17.4	23.9	4.5	2.67	90-106	34-40	20	30
XL4545	Closed	17.4	23.9	4.5	2.67	108-128	40-48	10	15
XL6050	Open	17.4	23.9	6	2.67	116-134	43-50	20	30
XL6055	Closed	17.4	23.9	6	2.67	139-163	52-61	10	15
XL9070	Open	17.4	23.9	9	2.67	173-201	65-75	20	30
XL9085	Closed	17.4	23.9	9	2.67	209-243	78-91	10	15

* Compressive Strength: 4000 PSI (Minimum)
** Maximum Absorption: 12.0 LBS FT^3 (Average of Three Units)

UltraFlex M4540

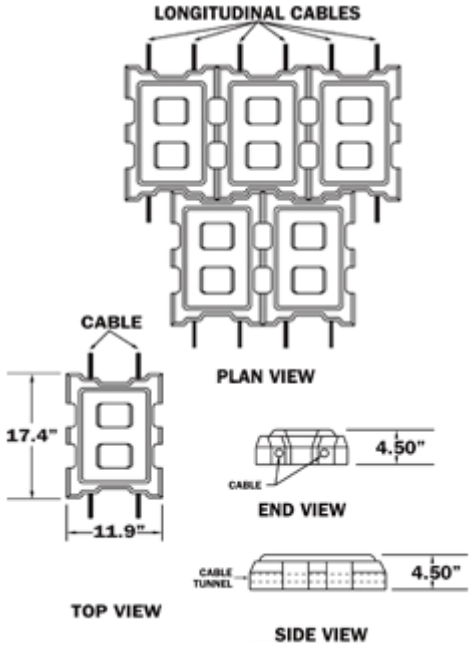

Appendix B

Osprey Pole Specifications

APPENDIX A

OSPREY PLATFORM PLANS

Rev. 1/8/08

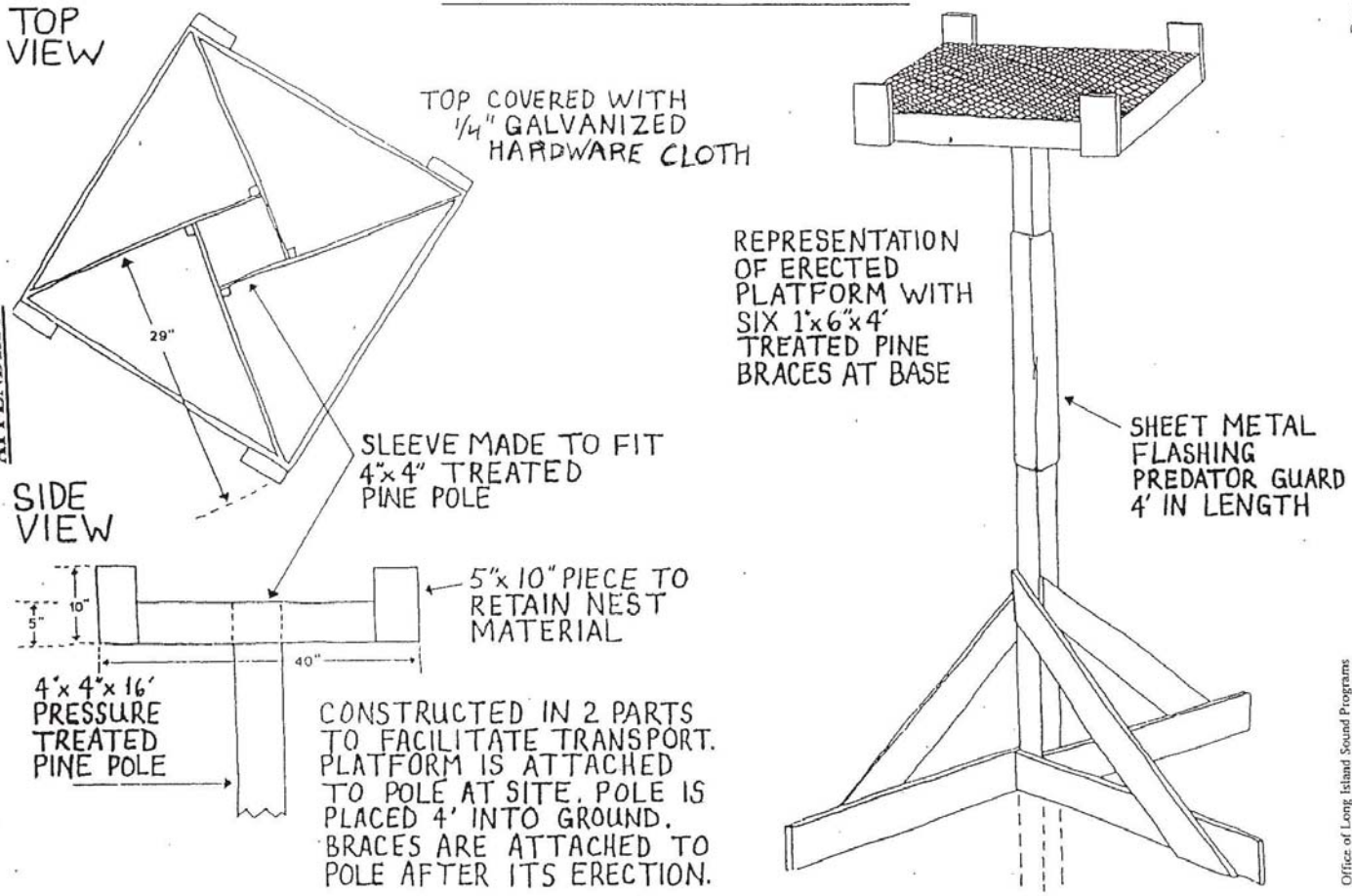

Office of Long Island Sound Programs
DEP-LIS-GP-004

OSPREY NEST PLATFORM

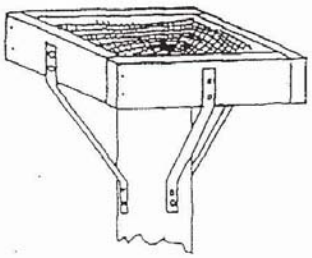

LUMBER: One 12" x 12" x ½" exterior plywood
One 2" x 6" x 12' cedar board
One 20' or 30' cedar support post
One 2" x 6" x 8' cedar board

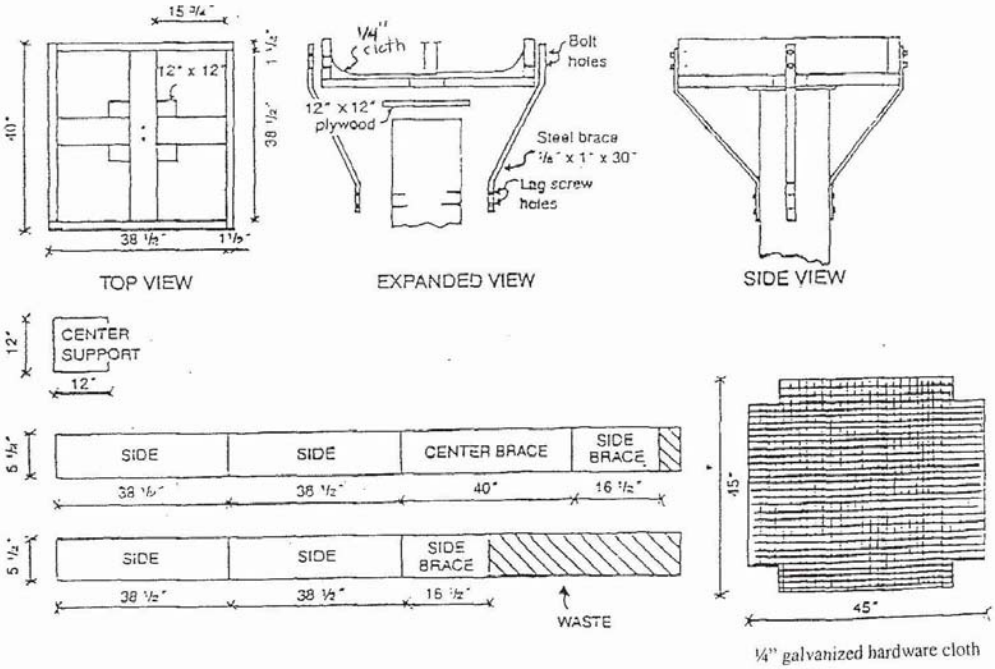

This diagram and information appears in *Woodworking for Wildlife*, Henderson (1984). Please see this publication for additional information on platform construction and placement.

Office of Long Island Sound Programs
DEP-LIS-GP-004

Rev. 1/8/08

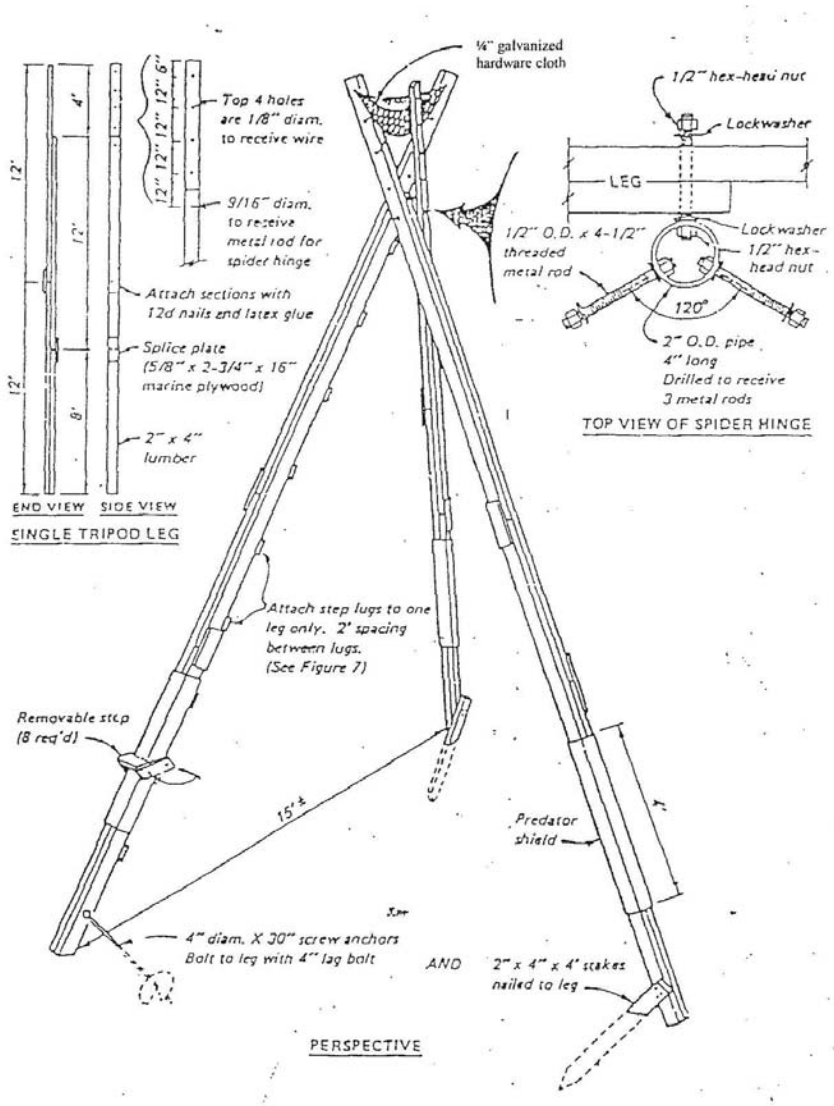

Design specifications for a Sanibel Tripod nesting platform for ospreys (after Webb and Lloyd, in press)

Office of Long Island Sound Programs
DEP-LIS-GP-004

Rev. 1/8/08