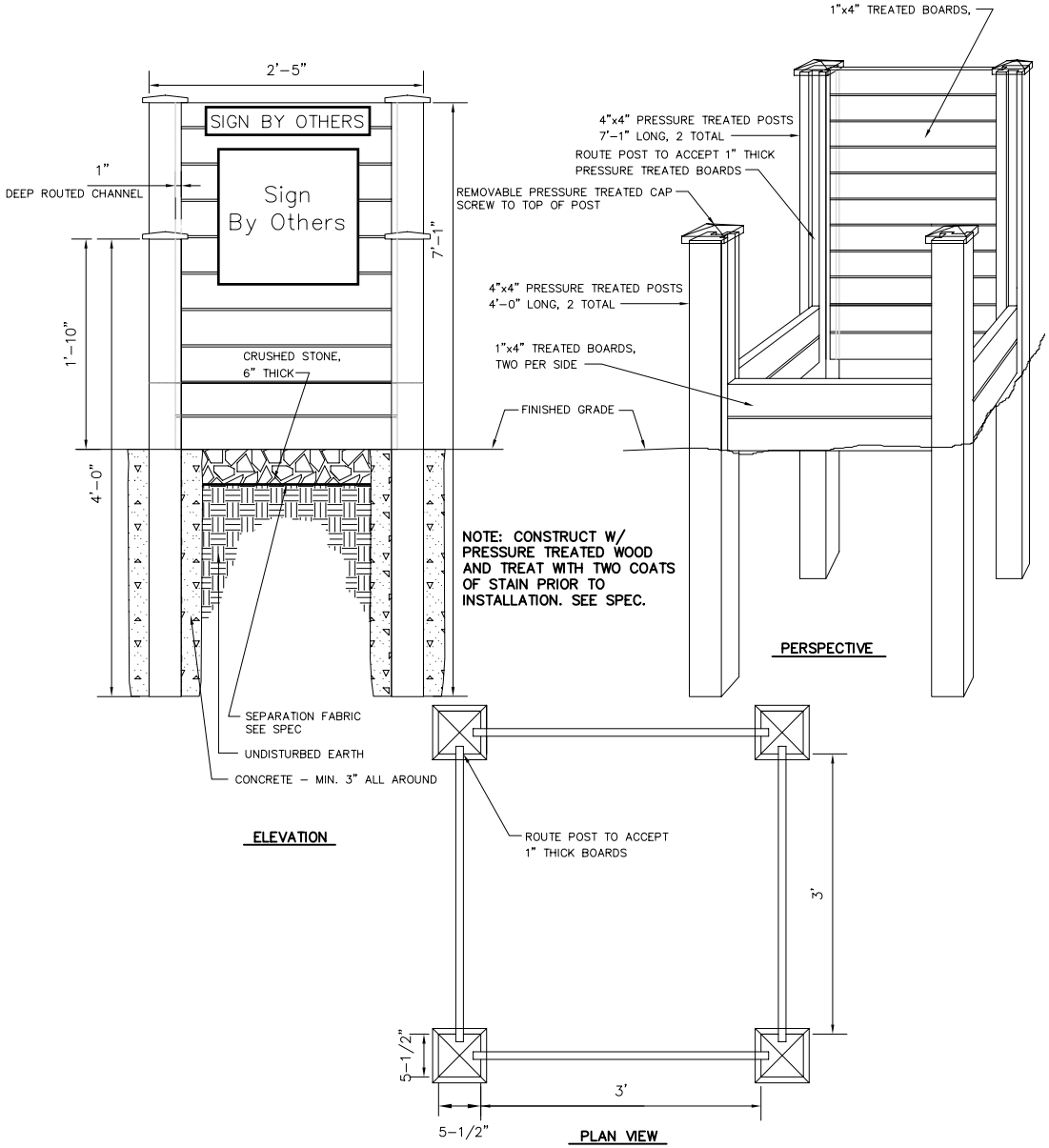

INVASIVE SPECIES DROP BOX DETAILS

SCALE: 1" = 1'-0"