# PART 231 New Source Review for New and Modified Facilities (effective 2/25/21) Applicability Flowcharts



## Subparts 231-5 & 6 Nonattainment (NA) Area NSR

- **Flowchart FC-1: Facility Type/Applicability Determination**
- **Flowchart FC-2: Proposed New Facility in an Ozone NA Area or Attainment Portion of the Ozone Transport Region (VOC & NOx)**
- **Flowchart FC-3: Proposed New Facility in a PM-10 NA Area**
- **Flowchart FC-4: Existing Facility Applicability Determination**
- **Flowchart FC-5A: Existing Major Facility Modification in a Severe Ozone NA Area (VOC & NOx)**
- **Flowchart FC-5B: Existing Major Facility Modification - Special Rules in Severe Ozone NA Area (VOC & NOx)**
- **Flowchart FC-6: Existing Major Facility Modification in a PM-10 NA Area**
- **Flowchart FC-7: Existing Major Facility Modification - Marginal/Moderate Ozone NA Areas or Attainment Portion of the Ozone Transport Region (VOC & NOx)**
- **Flowchart FC-8: Existing Non-Major Facility Modification in a Severe Ozone NA Area (VOC & NOx)**
- **Flowchart FC-9: Existing Non-Major Facility Modification in a PM-10 NA Area**
- **Flowchart FC-10: Existing Non-Major Facility Modification - Marginal/Moderate Ozone NA Areas or Attainment Portion of the Ozone Transport Region (VOC & NOx)**
- **Flowchart FC-11: Net Emission Increase**
- **Flowchart FC-12: Contemporaneous Period Determination for Severe Ozone NA Area (VOC & NOx)**
- **Flowchart FC-13: Contemporaneous Period Determination for Marginal/Moderate Ozone NA Areas and Attainment Portion of the Ozone Transport Region (VOC & NOx) or PM-10 NA Areas**
- **Flowchart FC-14: Contemporaneous Period Determination for Facilities Using an Alternative Operating Scenario**

## Subparts 231-7 & 8 Attainment Area NSR (PSD)

- **Flowchart FC-15: Facility Type/Applicability Determination**
- **Flowchart FC-16: Proposed New Facility**
- **Flowchart FC-17: Existing Facility Modification**
- **Flowchart FC-18: Net Emission Increase**
- **Flowchart FC-19: Contemporaneous Period Determination**
- **Flowchart FC-20: Contemporaneous Period Determination for Facilities Using an Alternative Operating Scenario**

## Appendices

- Appendix A: Examples
- Appendix B: Maps of Nonattainment Areas in New York
- Appendix C: Nonattainment (NA) Area NSR - Area/Contaminant Classification and Significant Net Emission Increase Thresholds
- Appendix D: Attainment Area (PSD) NSR - Regulated NSR Contaminants, Significant Project/Significant Net Emission Increase Thresholds and Source Category List
- Appendix E: Attainment Area (PSD) NSR - Global Warming Potential Values for Calculating $CO_2$ Equivalents

# Preface



There are four main scenarios on which the following flowcharts were based. These scenarios are presented below along with key points.

- Nonattainment NSR (Subparts 231-5 & 6)
  - New major facility or modification to an existing non-major facility (Subpart 231-5)
    - Nonattainment contaminants subject to Part 231 are only those with a potential to emit that exceeds the applicable major facility threshold
    - The facility cannot net out of Part 231 since netting is only allowed at existing major facilities
  - Existing major facility (Subpart 231-6)
    - The facility is considered to be major for all nonattainment contaminants for that location and the project's emissions are compared to the applicable significant project thresholds
- Attainment (PSD) NSR (Subparts 231-7 & 8)
  - New major facility or modification to an existing non-major facility (Subpart 231-7)
    - If emissions of one PSD contaminant are greater than the applicable major facility threshold then the facility is considered major for all PSD contaminants and the project's emissions of all other applicable PSD contaminant(s) are compared to the applicable significant project threshold(s)
  - Existing major facility (Subpart 231-8)
    - The facility is considered to be major for all PSD contaminants and the project emissions are compared to the applicable significant project thresholds

# Subparts 231-5 & 6
# Nonattainment (NA) Area NSR
# Flowchart FC-1: Facility Type/Applicability Determination



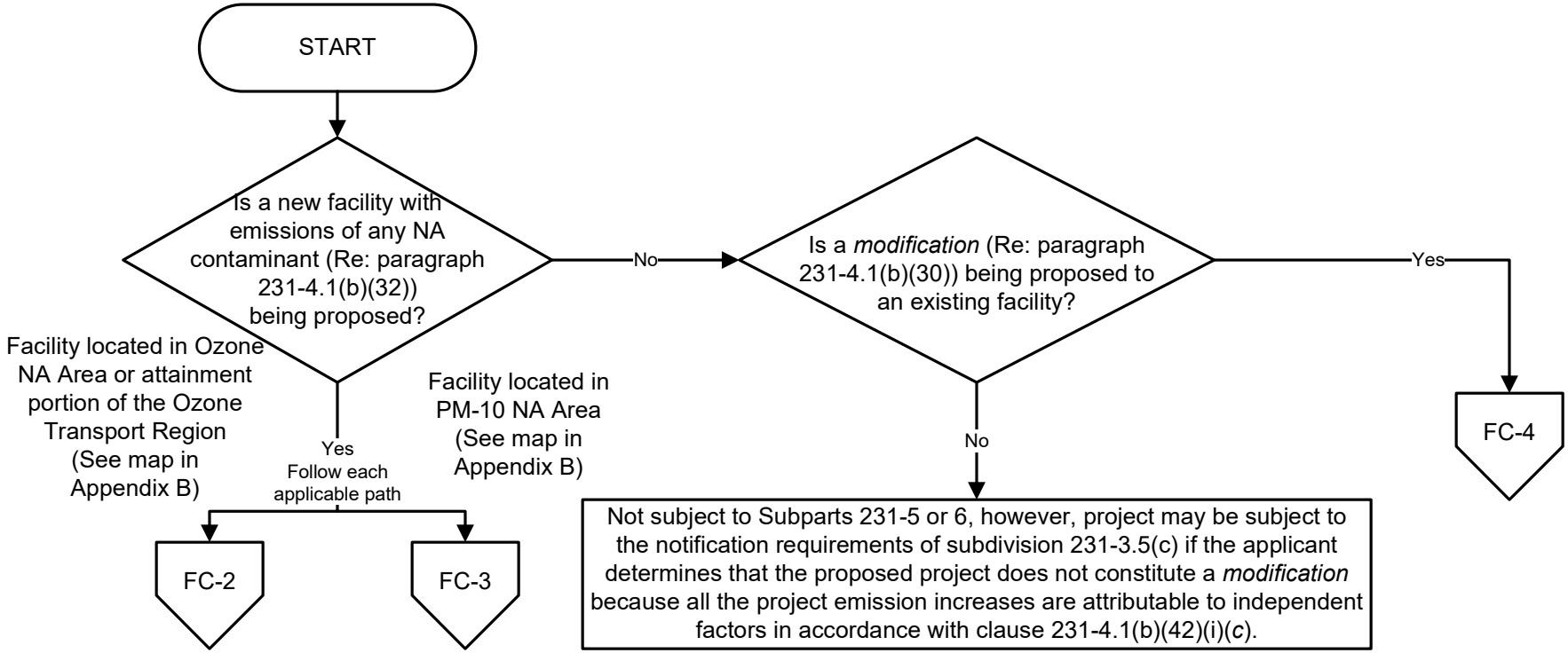


***Modification (231-4.1(b)(30))***. Any physical change in, or change in the method of operation of, a facility which results in a level of annual emissions (not including any emission reductions) in excess of the Baseline Actual Emissions of any Regulated NSR Contaminant emitted by such facility or which results in the emission of any Regulated NSR Contaminant not previously emitted. A modification shall not include the following:

(i) routine maintenance, repair, or replacement as defined in 6 NYCRR Part 200.

(ii) use of an alternative fuel or raw material by reason of an order under sections 2(a) and (b) of the Energy Supply and Environmental Coordination Act of 1974 (or any superseding legislation) or by reason of a natural gas curtailment plan pursuant to the Federal Power Act;

(iii) use of an alternative fuel by reason of an order or rule under section 125 of the Clean Air Act;

(iv) use of an alternative fuel at a steam generating unit to the extent that the fuel is generated from municipal solid waste;

(v) use of an alternative fuel or raw material by a facility which:

(*a*) the facility was capable of accommodating before January 6, 1975, unless such change would be prohibited under any federally enforceable permit condition which was established after January 6, 1975 pursuant to 40 CFR 52.21 or under regulations approved pursuant to 40 CFR Part 51Subpart I or 40 CFR 51.166; or

(*b*) the facility is approved to use, pursuant to this Part, or which is included in a permit issued pursuant to 40 CFR 52.21.

(vi) an increase in the hours of operation or in the production rate, unless such change would be prohibited under any permit condition which was established after January 6, 1975, pursuant to 40 CFR 52.21 or under regulations approved pursuant to 40 CFR Part 51 Subpart I or 40 CFR 51.166;

(vii) any change in ownership at a facility.

# Subpart 231-5
# Nonattainment (NA) Area NSR
# Flowchart FC-2: Proposed New Facility in an Ozone NA Area or Attainment Portion of the Ozone Transport Region (VOC & NOx)



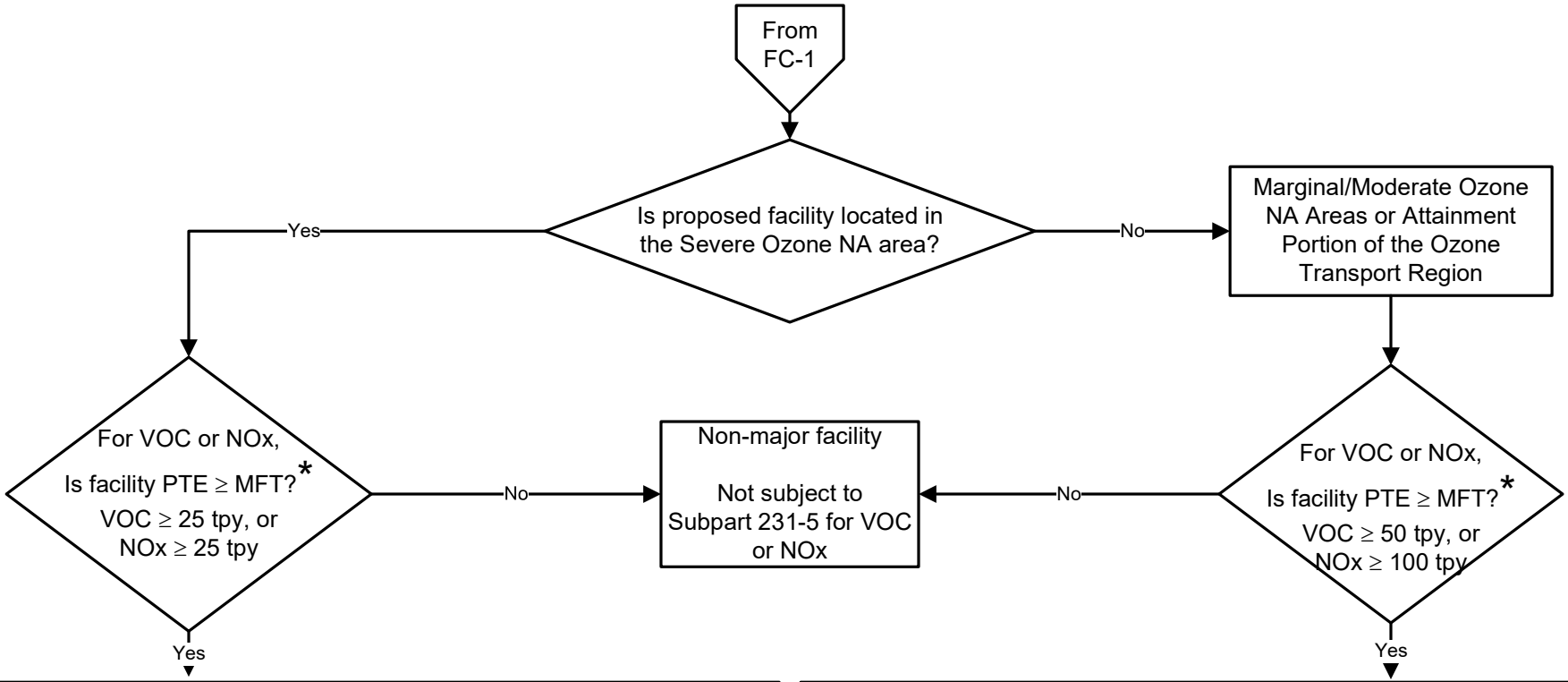


Major facility subject to Subpart 231-5 for each NA contaminant for which facility PTE ≥ MFT.

LAER control technology required for each emission source which is part of the proposed major facility and which emits any such NA contaminant.

Emission offset† required for the entire amount of the facility PTE times offset ratio for each such NA contaminant:
For VOC & NOx: 1.3:1 offset ratio

Major facility subject to Subpart 231-5 for each NA contaminant for which facility PTE ≥ MFT.

LAER control technology required for each emission source which is part of the proposed major facility and which emits any such NA contaminant.

Emission offset† required for the entire amount of the facility PTE times offset ratio for each such NA contaminant.
For VOC & NOx: 1.15:1 offset ratio

*Each NA contaminant is evaluated independently and can result in the need to follow the "yes" path for one and the "no" path for another

†An emission offset may be obtained from another NA area of equal or higher classification if emissions from such other area contribute to a violation of the National Ambient Air Quality Standard for the NA contaminant in the NA area of the proposed facility (Re: section 231-5.5)

Key:

PTE: Potential To Emit
MFT: Major Facility Threshold
LAER: Lowest Achievable Emission Rate

# Subpart 231-5
# Nonattainment (NA) Area NSR
# Flowchart FC-3: Proposed New Facility in a PM-10 NA Area



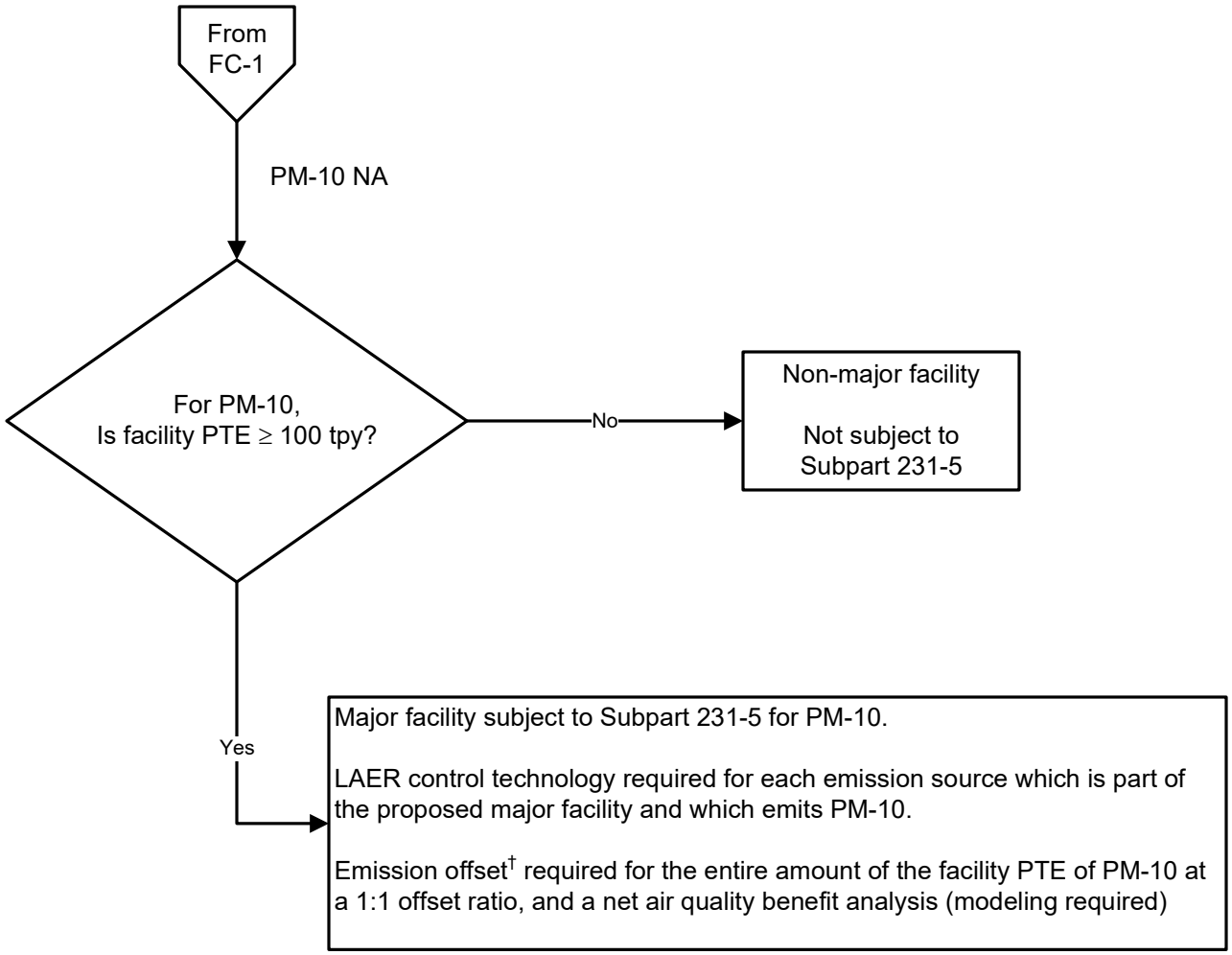


†An emission offset may be obtained from another NA area of equal or higher classification if emissions from such other area contribute to a violation of the National Ambient Air Quality Standard for PM-10 in the NA area of the proposed facility (Re: section 231-5.5)

Key:

PTE: Potential To Emit
MFT: Major Facility Threshold
LAER: Lowest Achievable Emission Rate

# Subparts 231-5 & 6
# Nonattainment (NA) Area NSR
# Flowchart FC-4: Existing Facility Applicability Determination



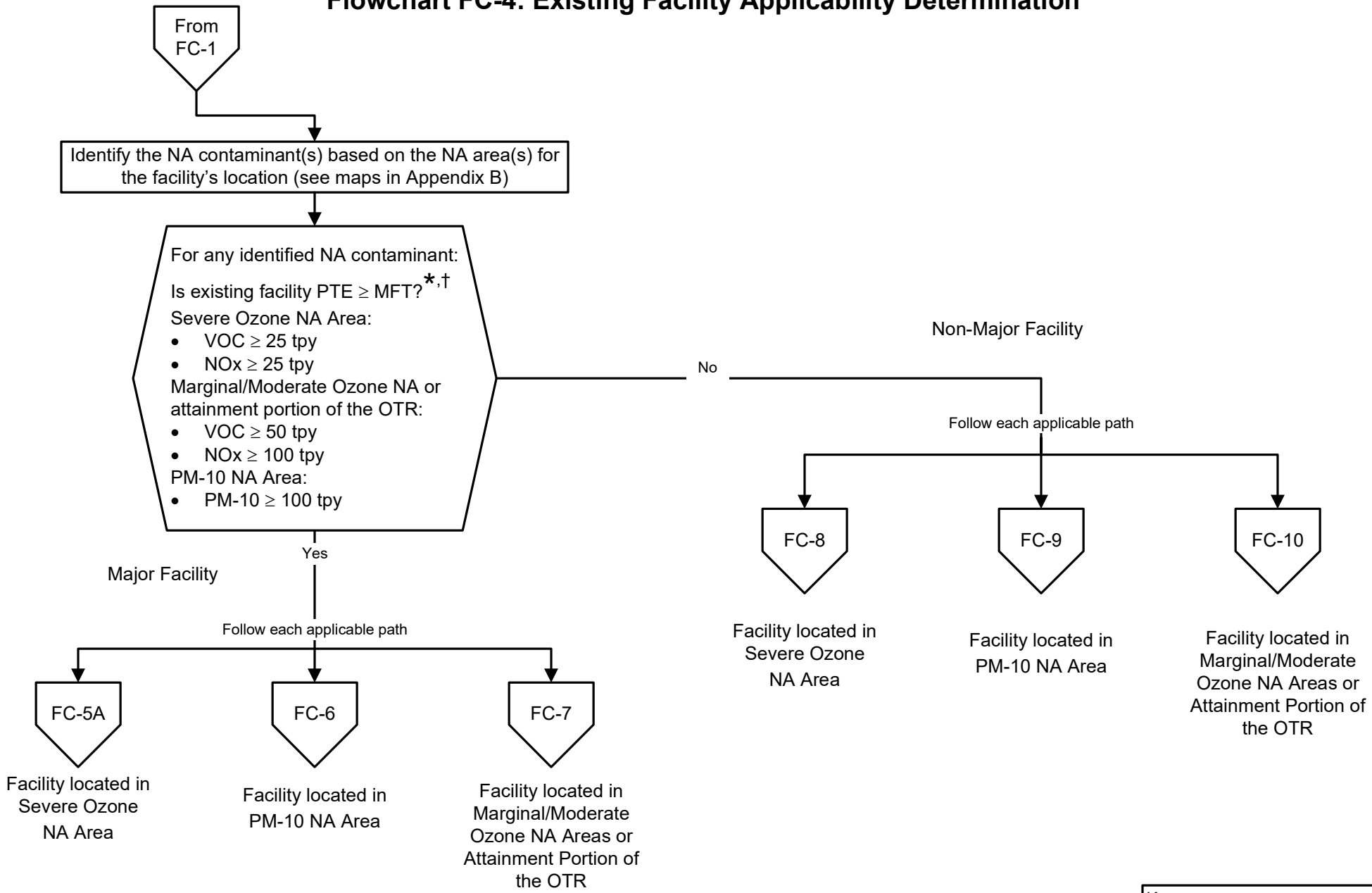


*For a facility in an area that is NA for multiple contaminants, if the facility PTE is greater than or equal to the MFT for one NA contaminant it is considered to be major for all applicable NA contaminants

†See Appendix A for examples

Key:

PTE: Potential To Emit
MFT: Major Facility Threshold
OTR: Ozone Transport Region

# Subpart 231-6
# Nonattainment (NA) Area NSR
# Flowchart FC-5A: Existing Major Facility Modification in a Severe Ozone NA Area (VOC & NOx)



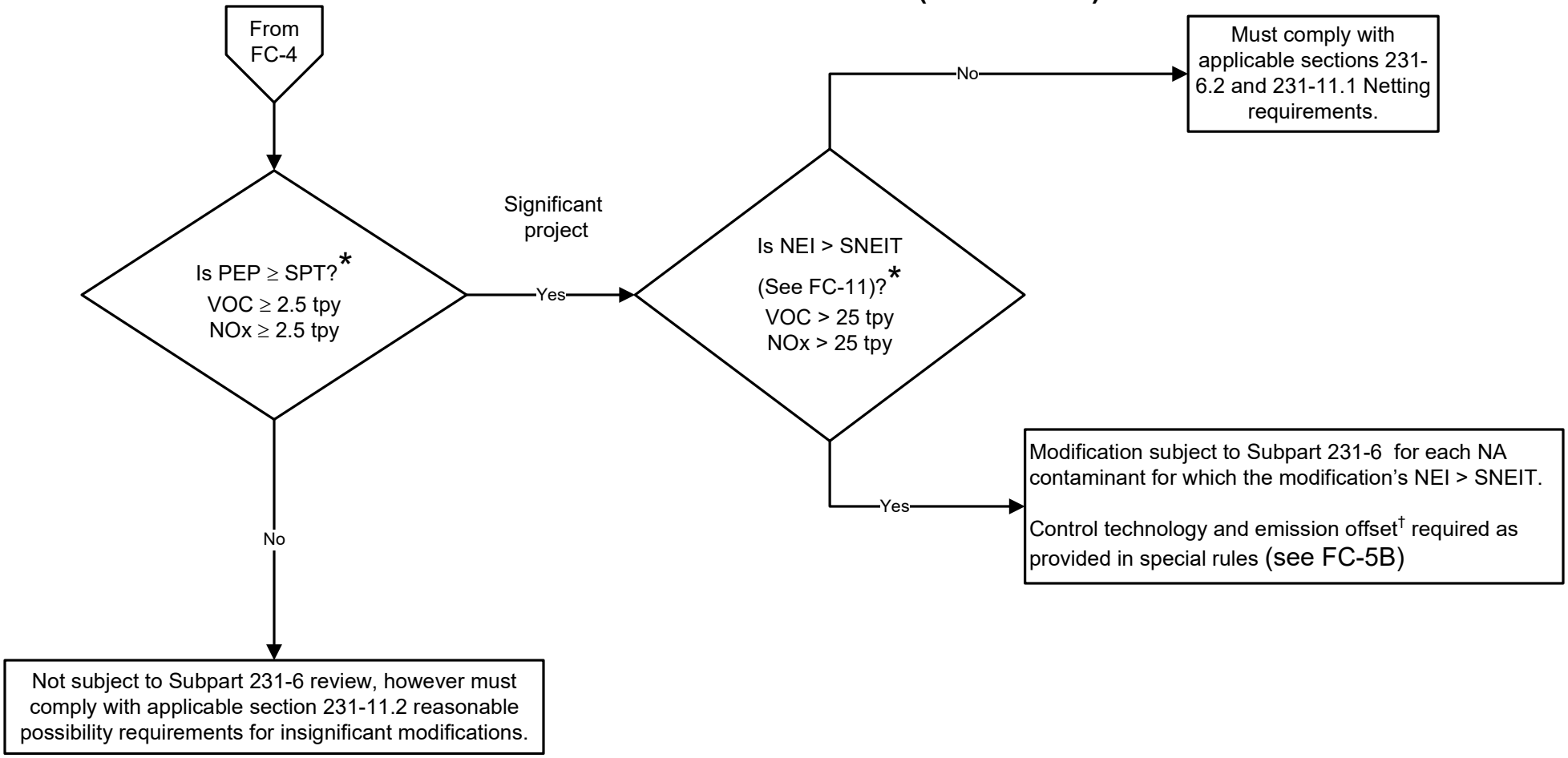


*Each NA contaminant is evaluated independently and can result in the need to follow the "yes" path for one and the "no" path for another

†An offset may be obtained from another NA area of equal or higher classification if emissions from such other area contribute to a violation of the National Ambient Air Quality Standard for the NA contaminant in the NA area of the modification (Re: Section 231-6.6).

Key:

PEP: Project Emission Potential
SPT: Significant Project Threshold
NEI: Net Emission Increase
SNEIT: Significant Net Emission Increase Threshold

# Subpart 231-6
# Nonattainment (NA) Area NSR
# Flowchart FC-5B: Existing Major Facility Modification - Special Rules in Severe Ozone NA Area (VOC & NOx)

**Re: subdivision 231-6.1(d) (for a modification where NEI > SNEIT for VOC or NOx)**



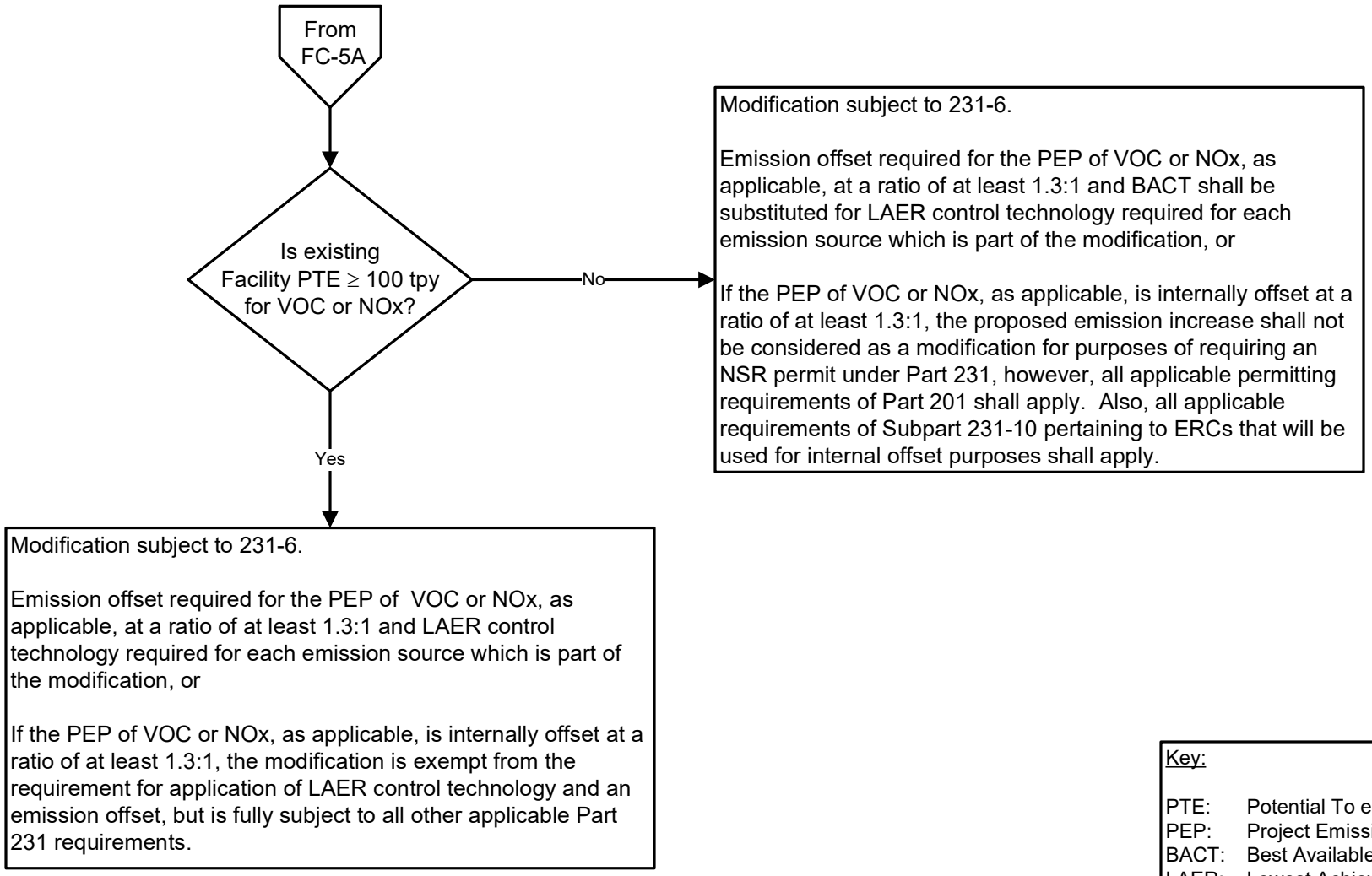


Key:

PTE: Potential To emit
PEP: Project Emission Potential
BACT: Best Available Control Technology
LAER: Lowest Achievable Emission Rate
ERC: Emission Reduction Credits

# Subpart 231-6
# Nonattainment (NA) Area NSR
# Flowchart FC-6: Existing Major Facility Modification in a PM-10 NA Area



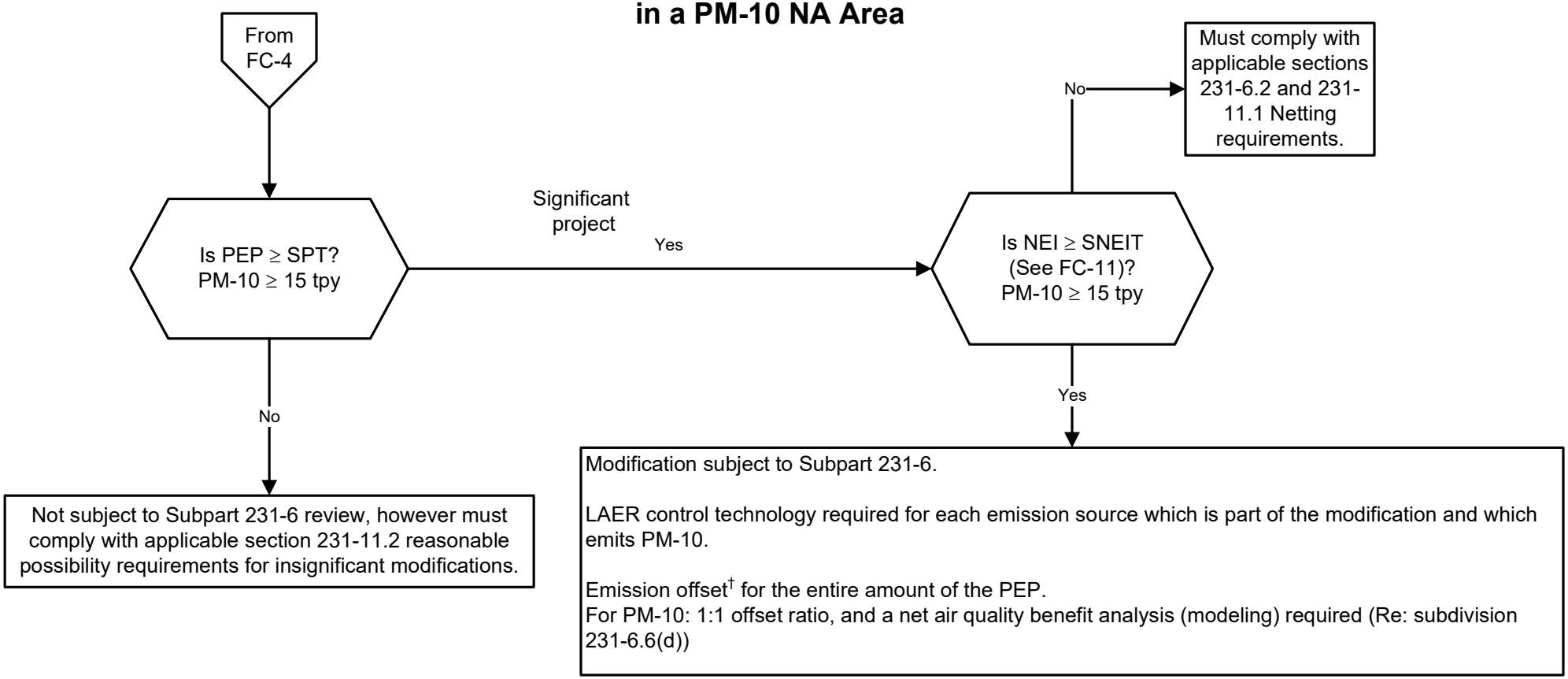


†An emission offset may be obtained from another NA area of equal or higher classification if emissions from such other area contribute to a violation of the National Ambient Air Quality Standard for PM-10 in the NA area of the proposed facility (Re: section 231-6.6)

Key:

| | |
|---|---|
| PEP: | Project Emission Potential |
| SPT: | Significant Project Threshold |
| NEI: | Net Emission Increase |
| SNEIT: | Significant Net Emission Increase Threshold |
| LAER: | Lowest Achievable Emission Rate |

# Subpart 231-6
# Nonattainment (NA) Area NSR
# Flowchart FC-7: Existing Major Facility Modification - Marginal/Moderate Ozone NA Areas or Attainment Portion of the Ozone Transport Region (VOC & NOx)



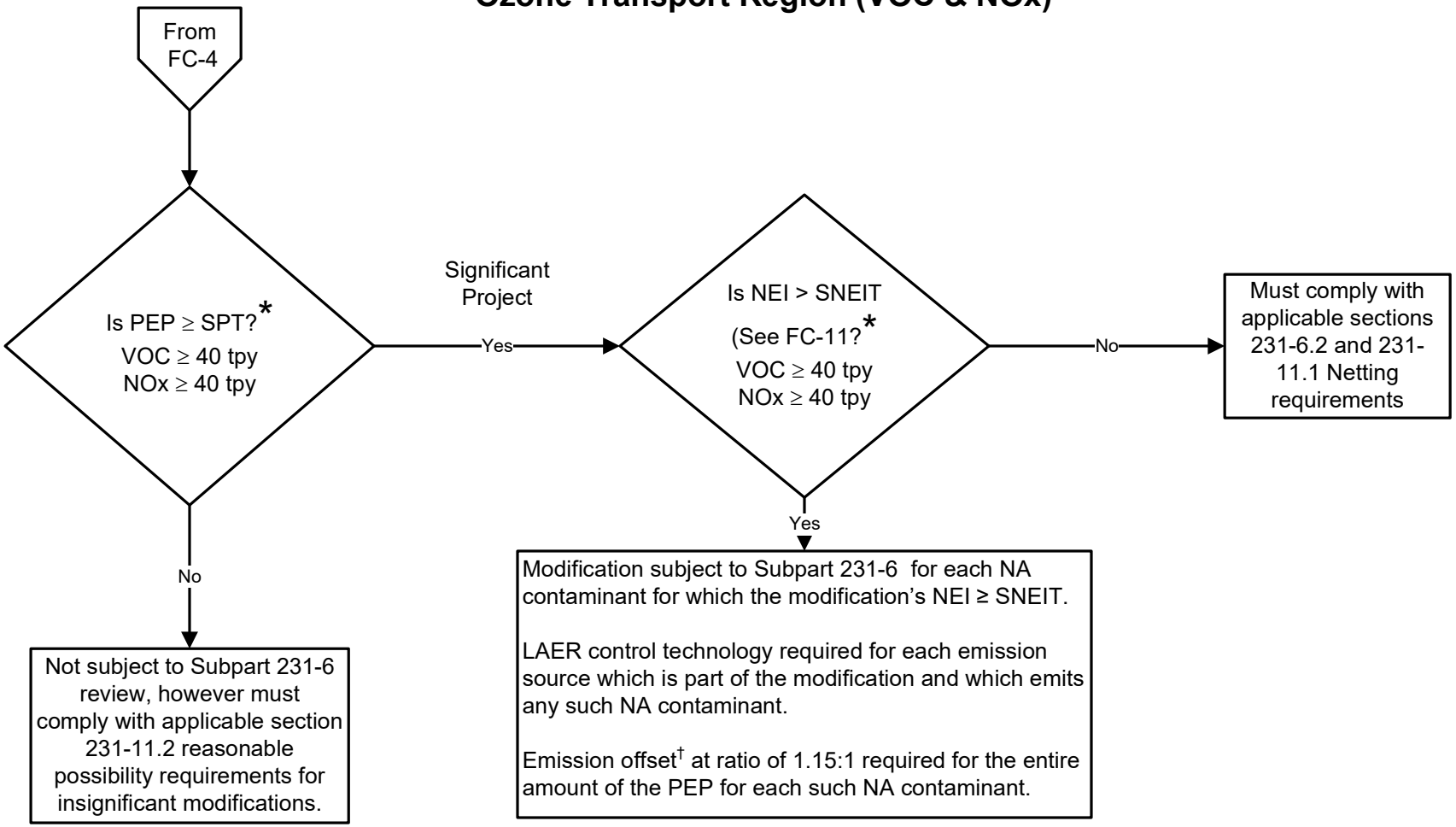


*Each NA contaminant is evaluated independently and can result in the need to follow the "yes" path for one and the "no" path for another

†An offset may be obtained from another NA area of equal or higher classification if emissions from such other area contribute to a violation of the National Ambient Air Quality Standard for the NA contaminant in the NA area of the modified facility (Re: Section 231-6.6).

Key:

| | |
|---|---|
| PEP: | Project Emission Potential |
| SPT: | Significant Project Threshold |
| NEI: | Net Emission Increase |
| SNEIT: | Significant Net Emission Increase Threshold |
| LAER: | Lowest Achievable Emission Rate |

# Subpart 231-5
# Nonattainment (NA) Area NSR
# Flowchart FC-8: Existing Non-Major Facility Modification in a Severe Ozone NA Area (VOC & NOx)



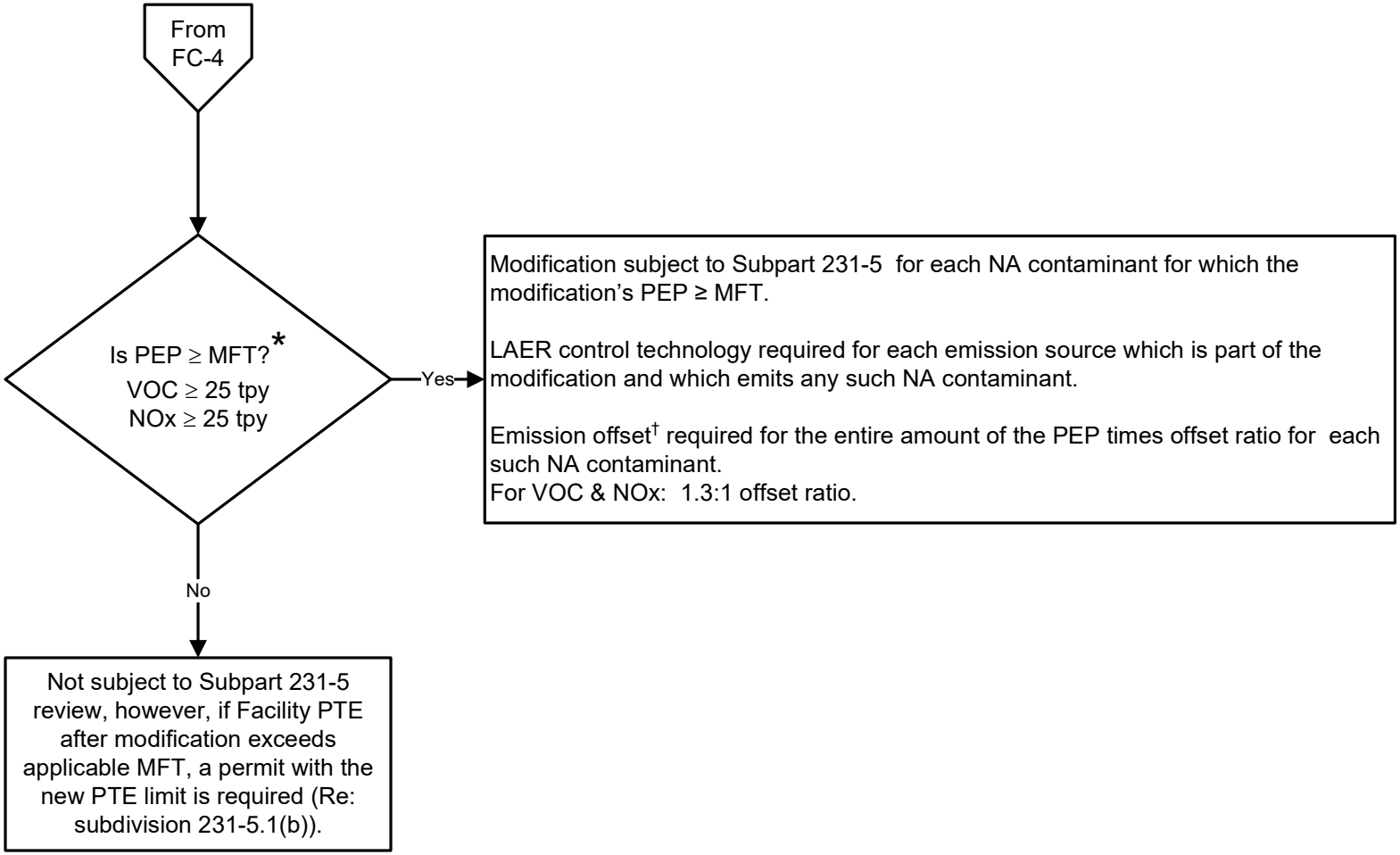


*Each NA contaminant is evaluated independently and can result in the need to follow the "yes" path for one and the "no" path for another

†An offset may be obtained from another NA area of equal or higher classification if emissions from such other area contribute to a violation of the National Ambient Air Quality Standard for the NA contaminant in the NA area of the modification (Re: section 231-5.5).

Key:

PEP: Project Emission Potential
MFT: Major Facility Threshold
PTE: Potential To Emit
LAER: Lowest Achievable Emission Rate

# Subpart 231-5
# Nonattainment (NA) Area NSR
# Flowchart FC-9: Existing Non-Major Facility Modification in a PM-10 NA Area



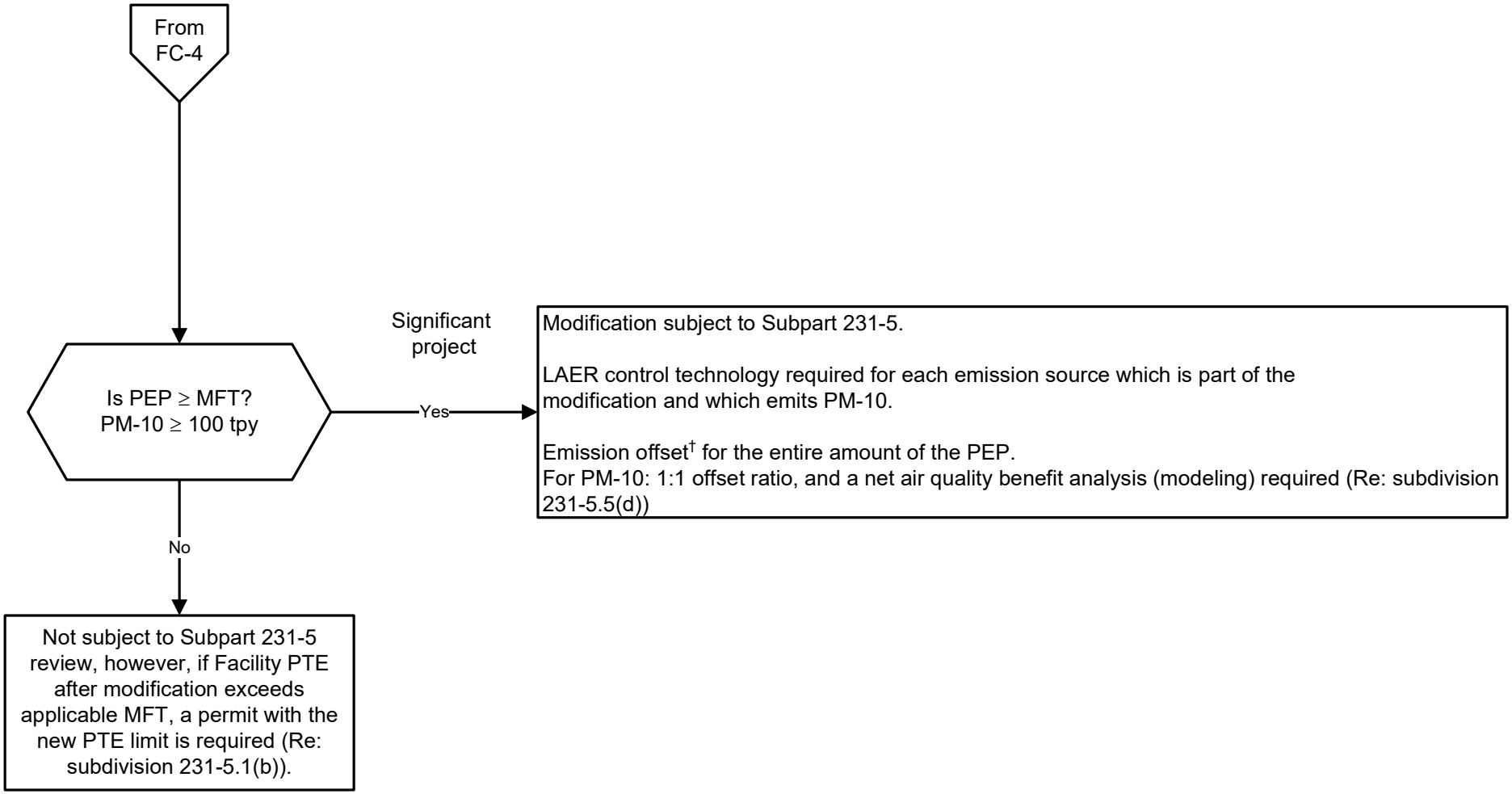


†An emission offset may be obtained from another NA area of equal or higher classification if emissions from such other area contribute to a violation of the National Ambient Air Quality Standard for PM-10 in the NA area of the proposed facility (Re: Section 231-5.5)

Key:

| | |
|---|---|
| PEP: | Project Emission Potential |
| MFT: | Major Facility Threshold |
| PTE: | Potential To Emit |
| LAER: | Lowest Achievable Emission Rate |

# Subpart 231-5
# Nonattainment (NA) Area NSR
## Flowchart FC-10: Existing Non-Major Facility Modification - Marginal/Moderate Ozone NA Areas or Attainment Portion of the Ozone Transport Region (VOC & NOx)



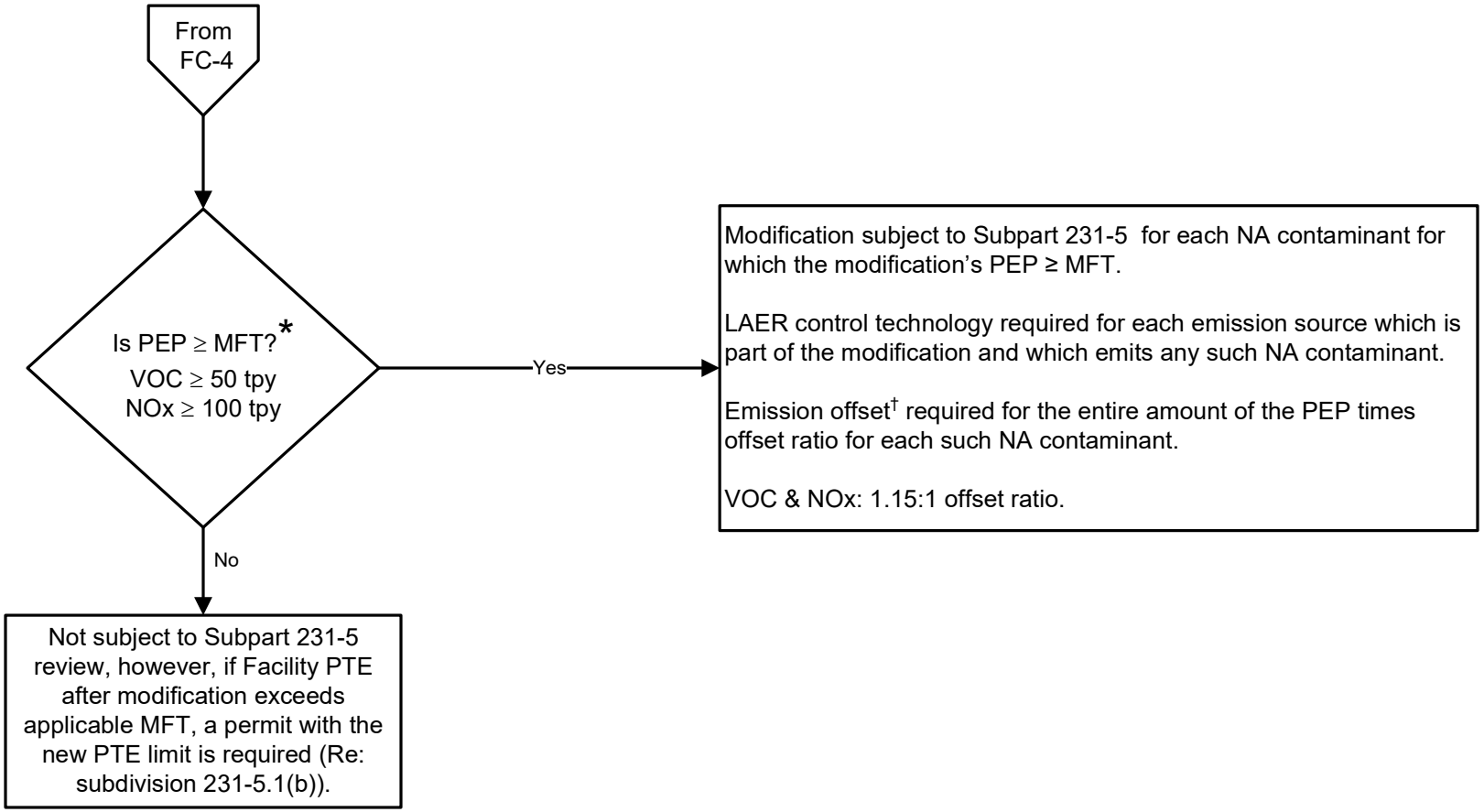


*Each NA contaminant is evaluated independently and can result in the need to follow the "yes" path for one and the "no" path for another

†An offset may be obtained from another NA area of equal or higher classification if emissions from such other area contribute to a violation of the National Ambient Air Quality Standard for the NA contaminant in the NA area of the modified facility (Re: section 231-5.5).

Key:

PEP: Project Emission Potential
MFT: Major Facility Threshold
PTE: Potential To Emit
LAER: Lowest Achievable Emission Rate

# Subpart 231-6
# Nonattainment (NA) Area NSR
# Flowchart FC-11: Net Emission Increase

**Re: paragraph 231-4.1(b)(31)**



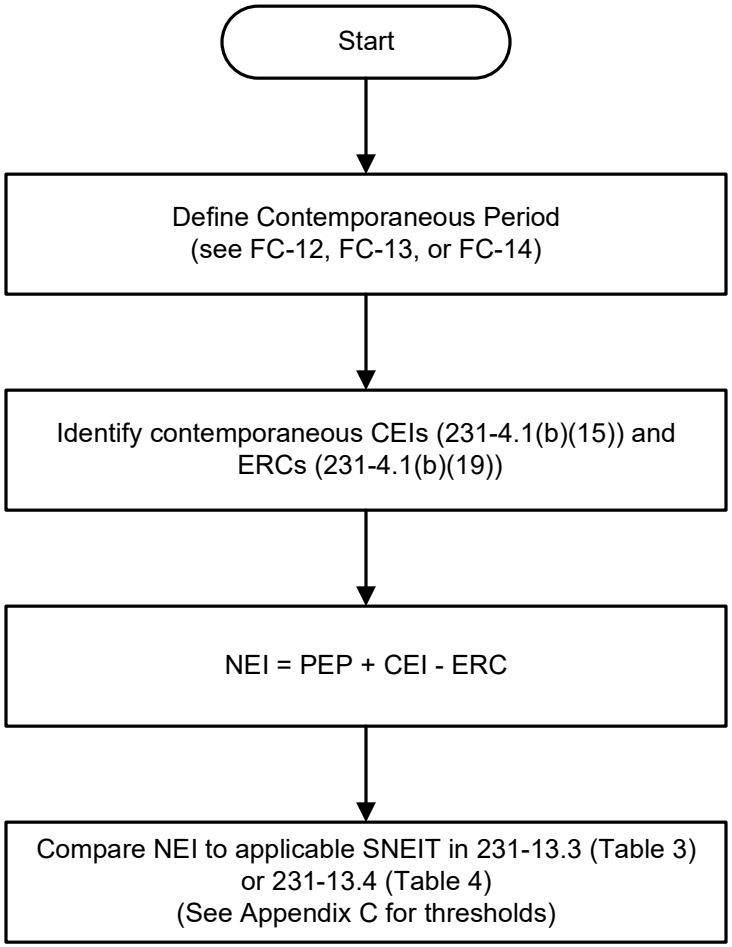


Key:

CEI: Creditable Emission Increase
ERC: Emission Reduction Credits
NEI: Net Emission Increase
PEP: Project Emission Potential
SNEIT: Significant Net Emission Increase Threshold

# Subpart 231-6
# Nonattainment (NA) Area NSR
# Flowchart FC-12: Contemporaneous Period Determination for Severe Ozone NA Area (VOC & NOx)

**Re: paragraph 231-4.1(b)(14)(ii)**



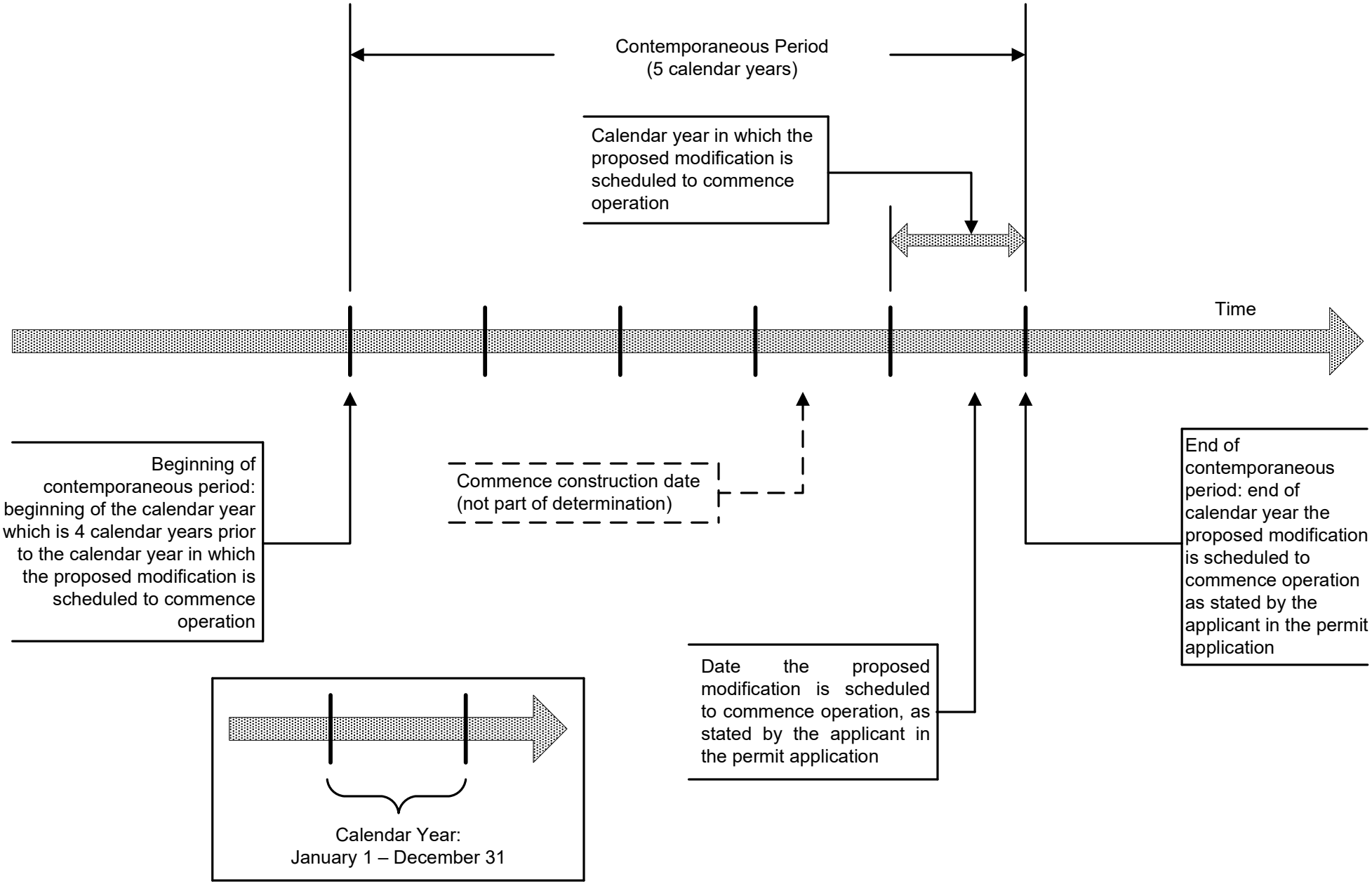

# Subpart 231-6
# Nonattainment (NA) Area NSR
# Flowchart FC-13: Contemporaneous Period Determination for Marginal/ Moderate Ozone NA Areas and Attainment Portion of the Ozone Transport Region (VOC & NOx) or PM-10 NA Area



**Re: paragraph 231-4.1(b)(14)(i)**

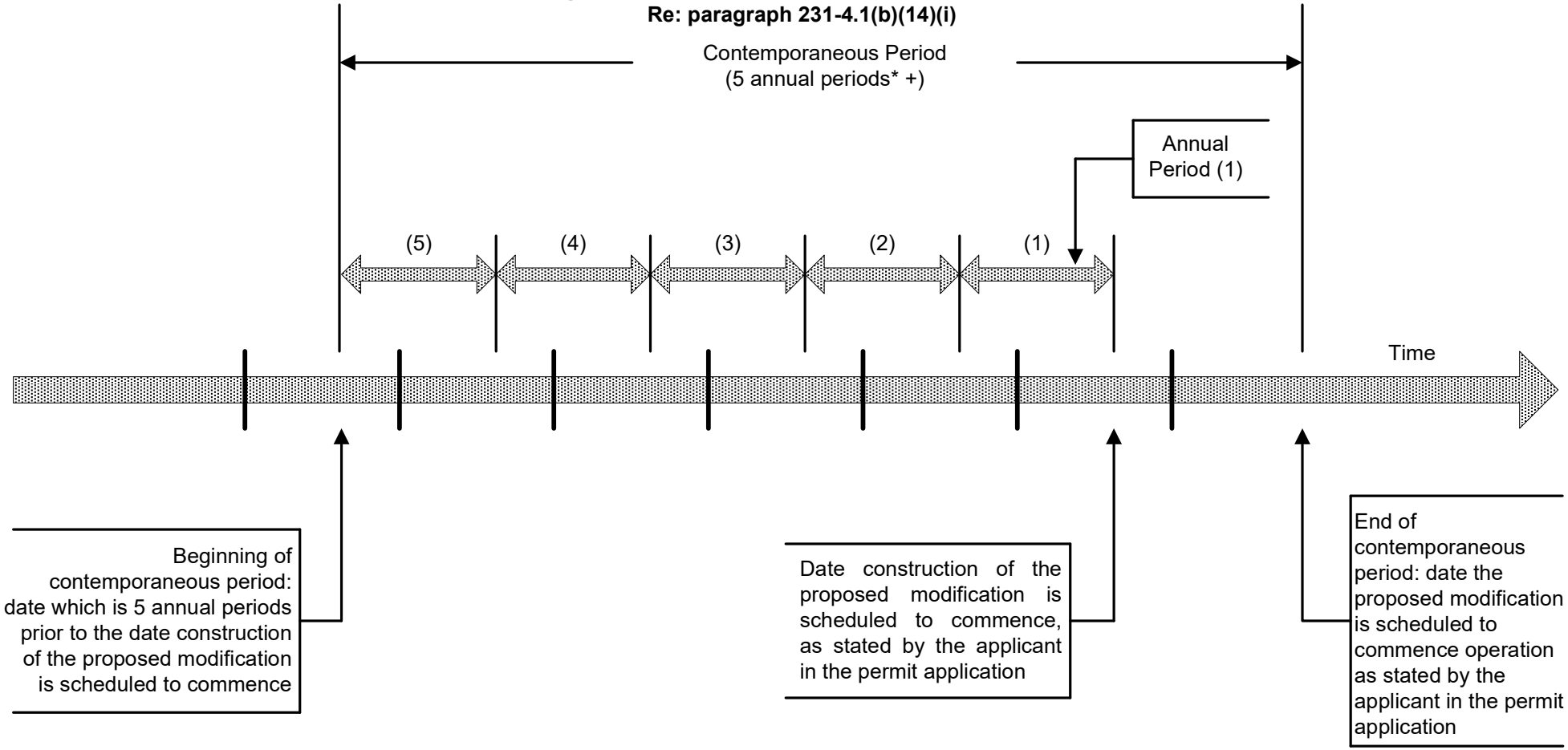


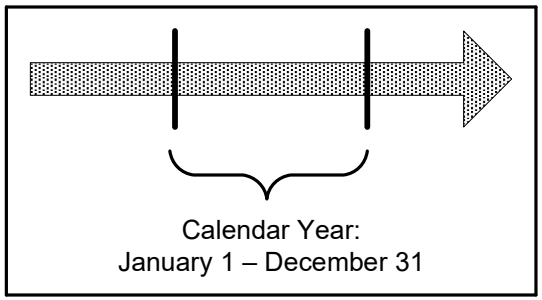


*Annual Period: a period of 365 consecutive days

# Subpart 231-6
# Nonattainment (NA) Area NSR
# Flowchart FC-14: Contemporaneous Period Determination for Facilities using an Alternative Operating Scenario

**Re: paragraph 231-4.1(b)(14)(iii)**



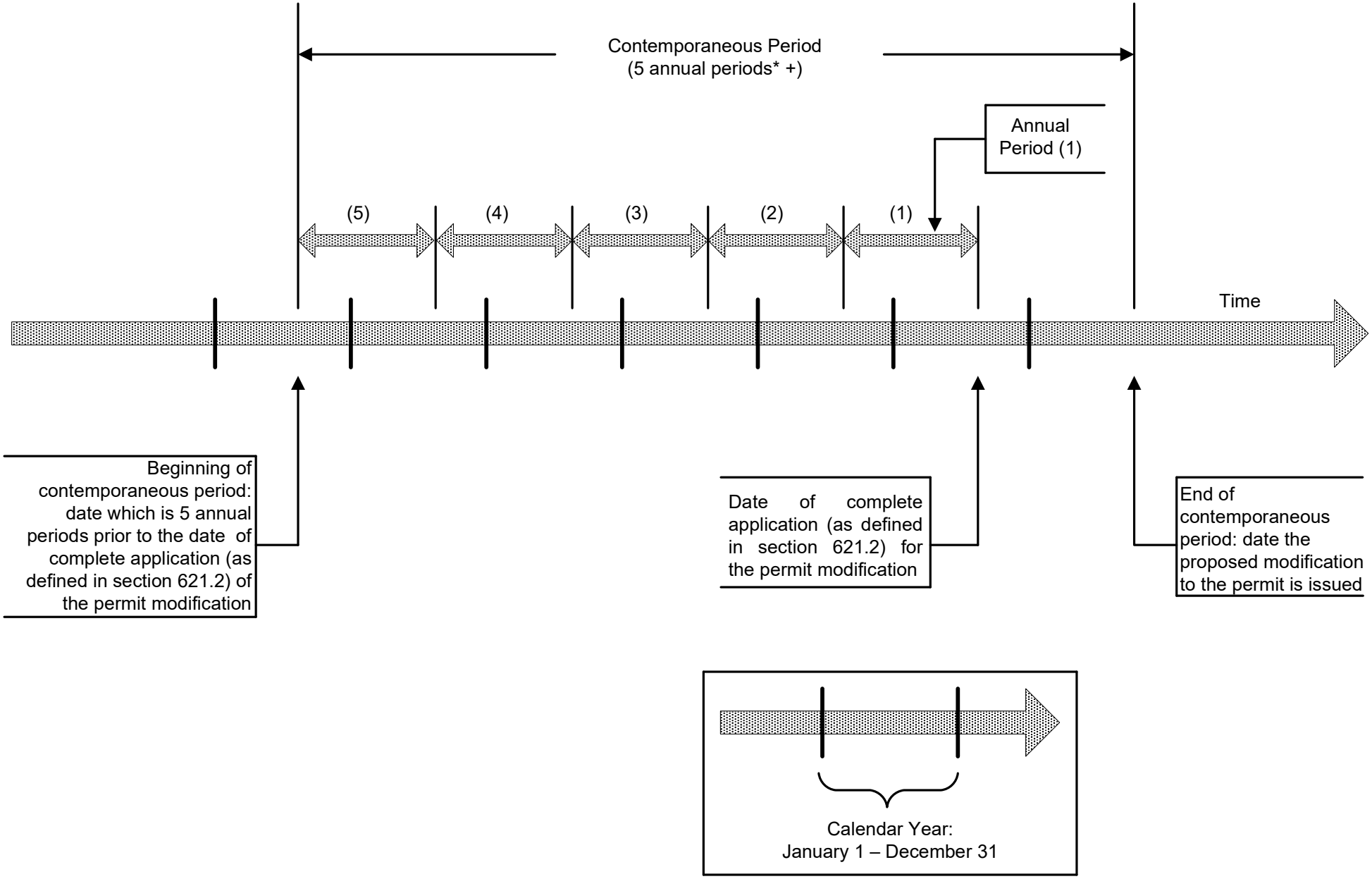


*Annual Period: a period of 365 consecutive days

# Subparts 231-7 & 8
# Attainment Area (PSD) NSR
# Flowchart FC-15: Facility Type/Applicability Determination



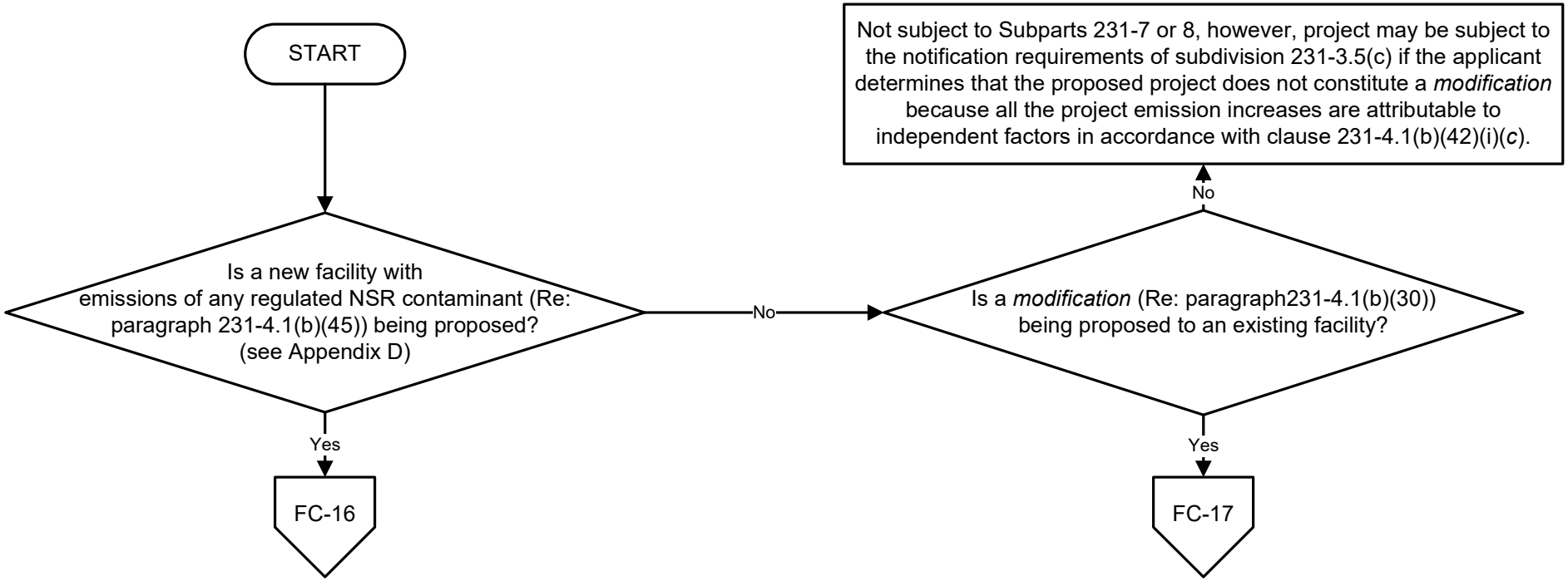


***Modification (231-4.1(b)(30))***. Any physical change in, or change in the method of operation of, a facility which results in a level of annual emissions (not including any emission reductions) in excess of the Baseline Actual Emissions of any Regulated NSR Contaminant emitted by such facility or which results in the emission of any Regulated NSR Contaminant not previously emitted. A modification shall not include the following:

(i) routine maintenance, repair, or replacement as defined in 6 NYCRR Part 200.

(ii) use of an alternative fuel or raw material by reason of an order under sections 2(a) and (b) of the Energy Supply and Environmental Coordination Act of 1974 (or any superseding legislation) or by reason of a natural gas curtailment plan pursuant to the Federal Power Act;

(iii) use of an alternative fuel by reason of an order or rule under section 125 of the Clean Air Act;

(iv) use of an alternative fuel at a steam generating unit to the extent that the fuel is generated from municipal solid waste;

(v) use of an alternative fuel or raw material by a facility which:

(*a*) the facility was capable of accommodating before January 6, 1975, unless such change would be prohibited under any federally enforceable permit condition which was established after January 6, 1975 pursuant to 40 CFR 52.21 or under regulations approved pursuant to 40 CFR Part 51Subpart I or 40 CFR 51.166; or

(*b*) the facility is approved to use, pursuant to this Part, or which is included in a permit issued pursuant to 40 CFR 52.21.

(vi) an increase in the hours of operation or in the production rate, unless such change would be prohibited under any permit condition which was established after January 6, 1975, pursuant to 40 CFR 52.21 or under regulations approved pursuant to 40 CFR Part 51 Subpart I or 40 CFR 51.166;

(vii) any change in ownership at a facility.

# Subpart 231-7
# Attainment Area (PSD) NSR
# Flowchart FC-16: Proposed New Facility



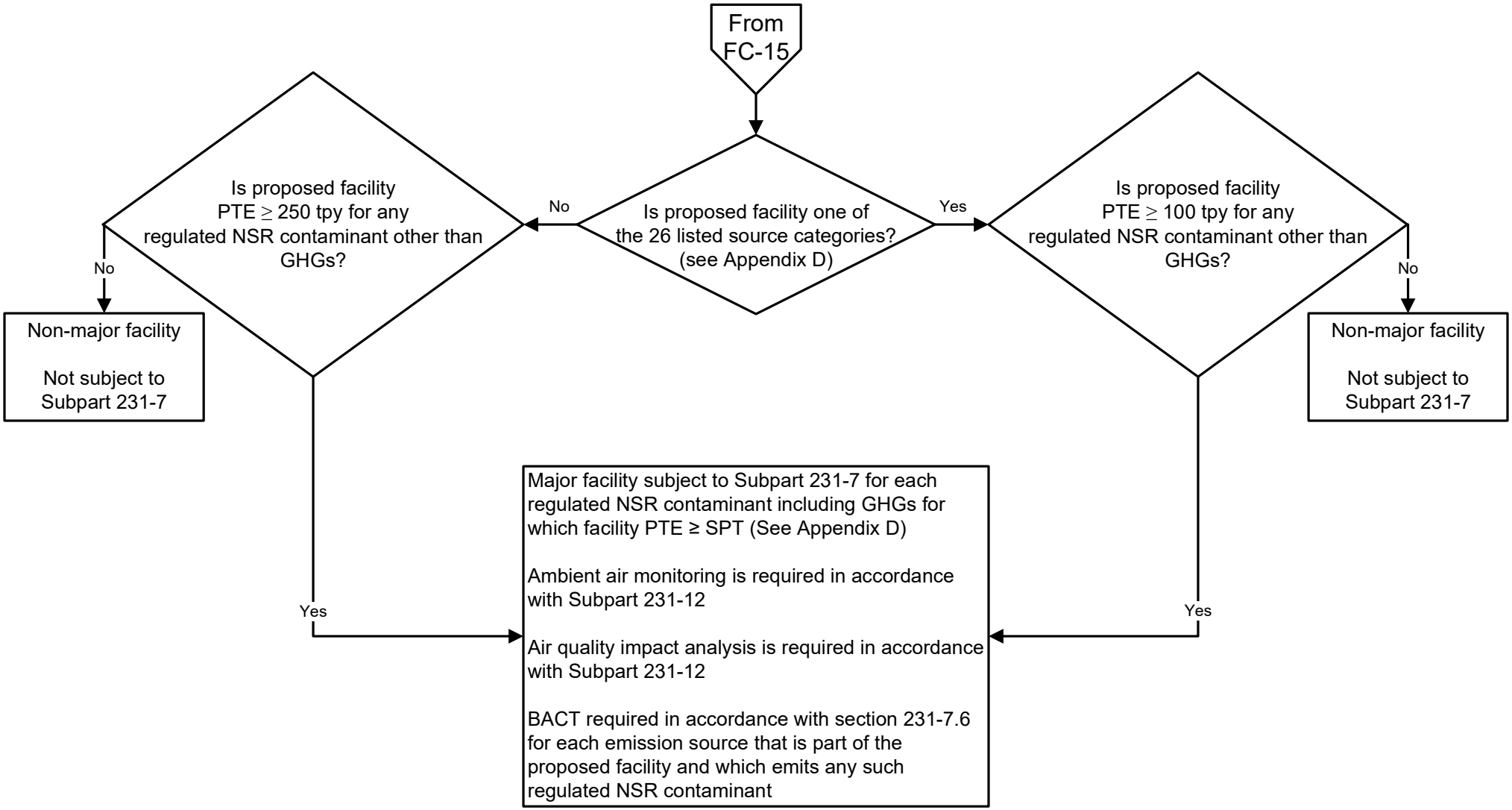


Key:

PSD: Prevention of Significant Deterioration
PTE: Potential To Emit
GHGs: Greenhouse Gases
SPT: Significant Project Threshold
BACT: Best Available Control Technology

# Subpart 231-7 & 8
# Attainment Area (PSD) NSR
# Flowchart FC-17: Existing Facility Modification



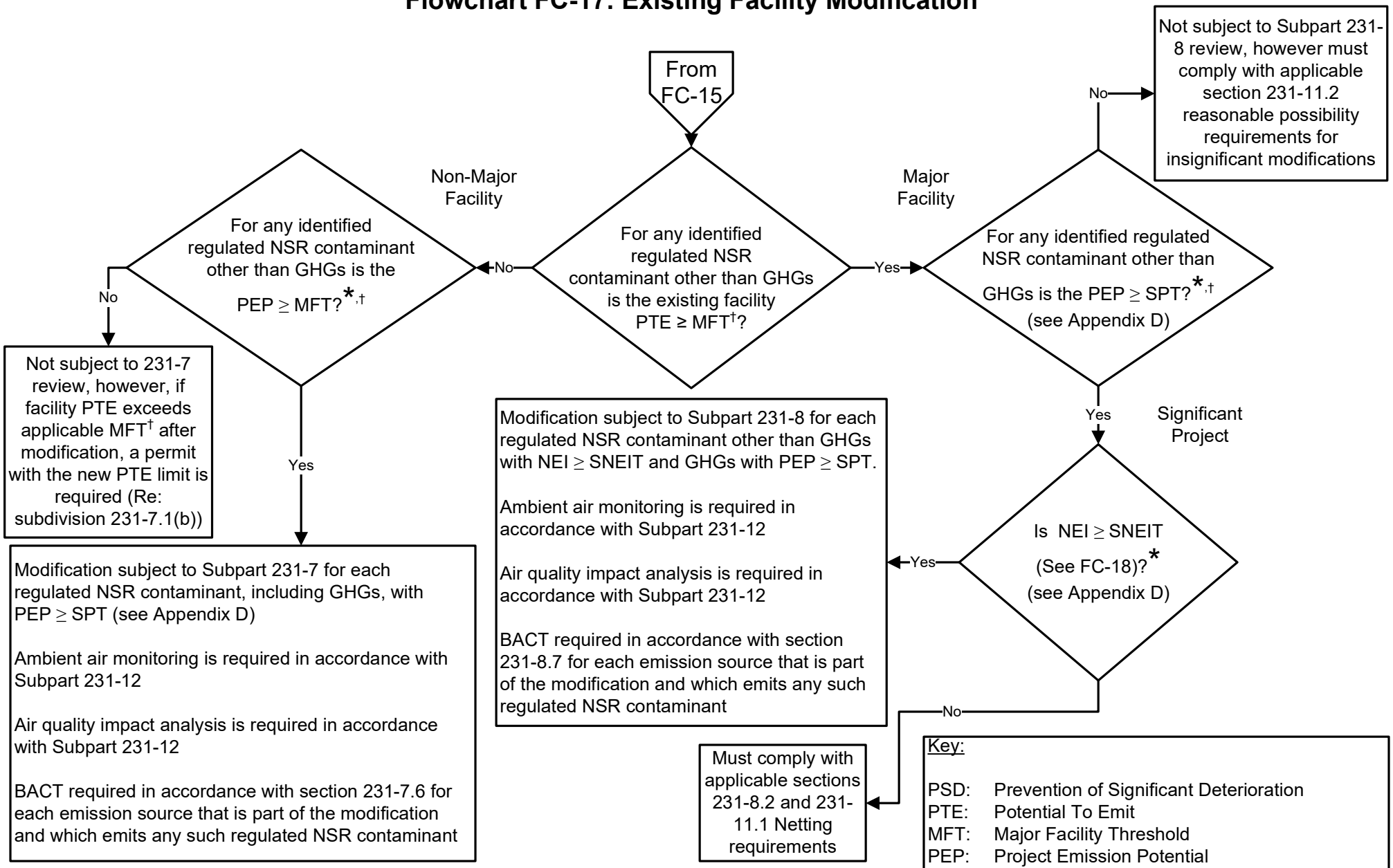


Key:

| | |
|---|---|
| PSD: | Prevention of Significant Deterioration |
| PTE: | Potential To Emit |
| MFT: | Major Facility Threshold |
| PEP: | Project Emission Potential |
| SPT: | Significant Project Threshold |
| NEI: | Net Emission Increase |
| SNEIT: | Significant Net Emission Increase Threshold |
| BACT: | Best Available Control Technology |
| GHGs: | Greenhouse Gases |

†MFT = 100 tpy for source categories listed in Appendix D or 250 tpy if not listed

*Each regulated NSR contaminant is evaluated independently and can result in the need to follow the "yes" path for one and the "no" path for another

# Subpart 231-8
# Attainment Area (PSD) NSR
# Flowchart FC-18: Net Emission Increase

**Re: paragraph 231-4.1(b)(31)**



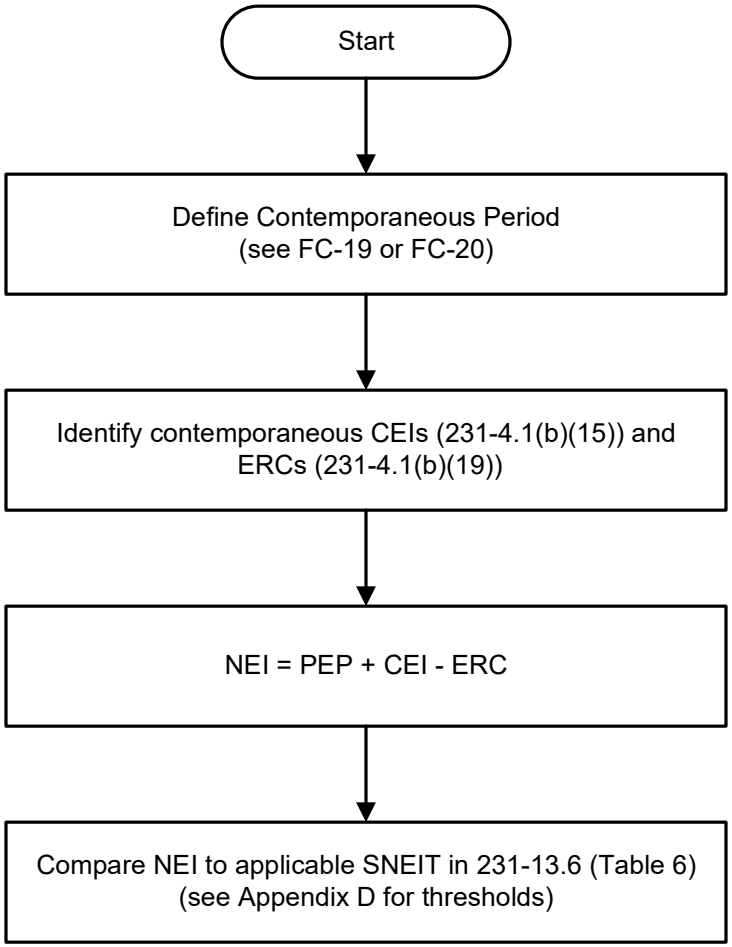


Key:

CEI: Creditable Emission Increase
ERC: Emission Reduction Credit
NEI: Net Emission Increase
PEP: Project Emission Potential
SNEIT: Significant Net Emission Increase Threshold

# Subpart 231-8
# Attainment Area (PSD) NSR
# Flowchart FC-19: Contemporaneous Period Determination



**Re: paragraph 231-4.1(b)(14)(i)**

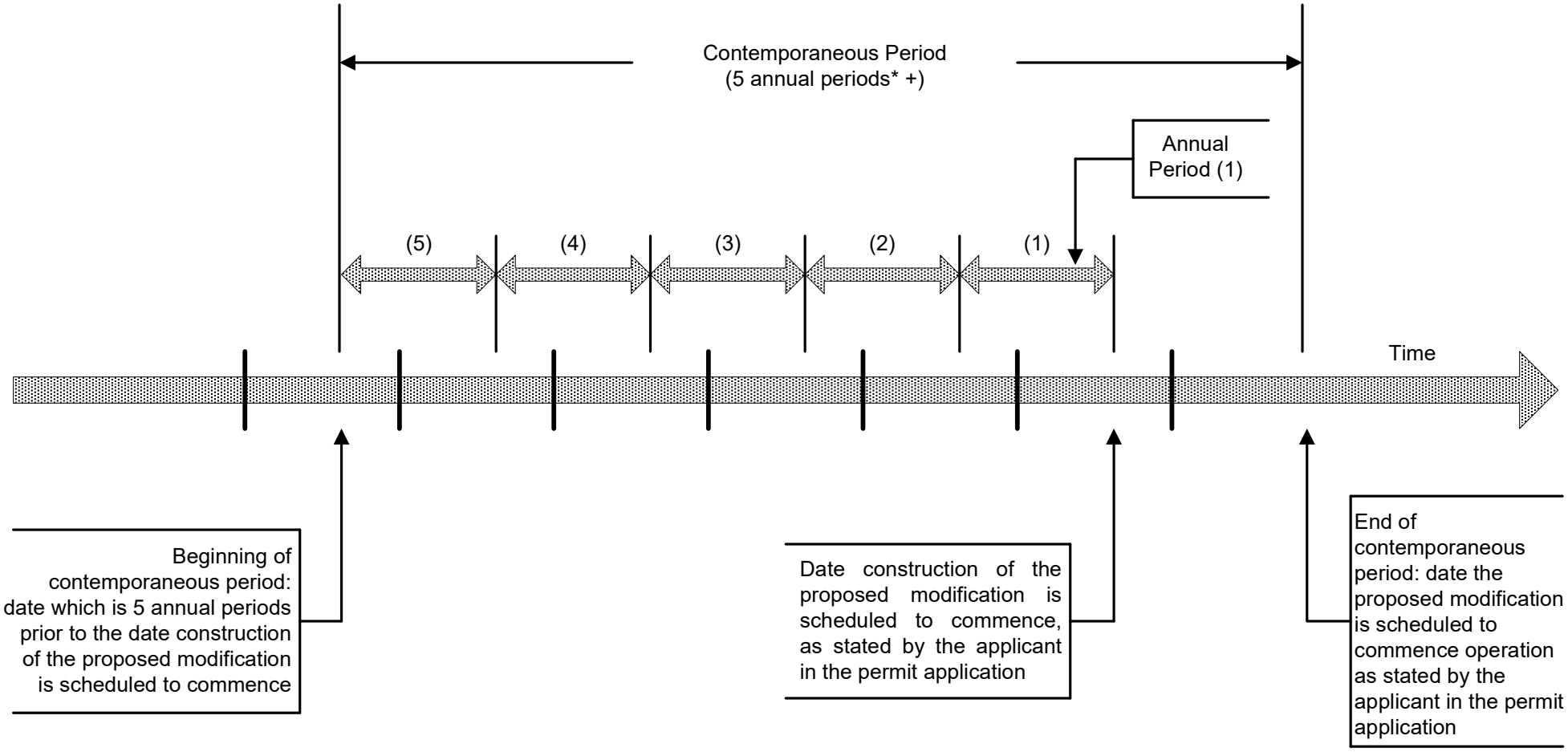


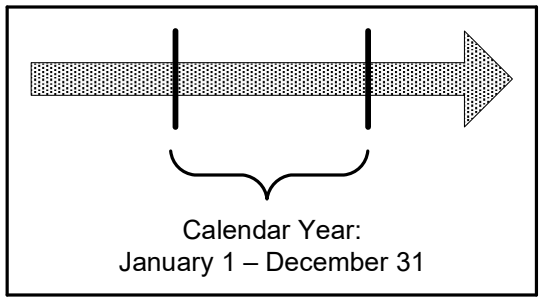


*Annual Period: a period of 365 consecutive days

# Subpart 231-8
# Attainment Area (PSD) NSR
## Flowchart FC-20: Contemporaneous Period Determination for Facilities using an Alternative Operating Scenario

**Re: paragraph 231-4.1(b)(14)(iii)**



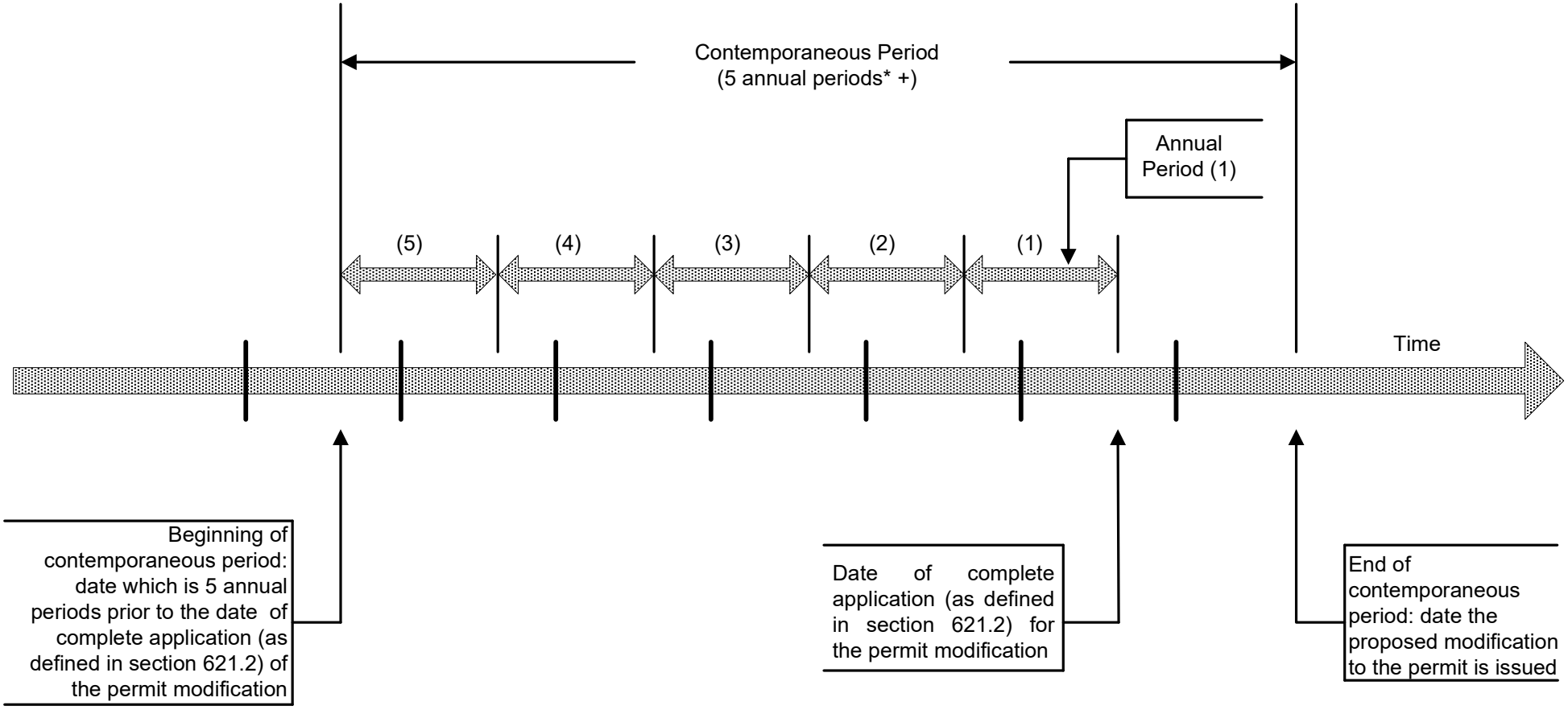


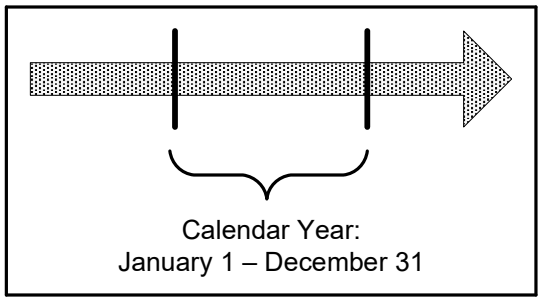


*Annual Period: a period of 365 consecutive days

# Appendix A: Examples
# Nonattainment Area and Attainment Area NSR

## Subparts 231-5 & 6 Nonattainment (NA) Area NSR

- **Example A-1: Existing Major Facility Modification in Manhattan with No Contemporaneous Modifications**
- **Example A-2: Existing Major Facility Modification in Manhattan with Contemporaneous Modifications**
- **Example A-3: Existing Non-Major Facility Modification in Manhattan**
- **Example A-4: Existing Major Facility Modification in Syracuse with No Contemporaneous Modifications**
- **Example A-5: Existing Major Facility Modification in Syracuse with Contemporaneous Modifications**
- **Example A-6: Existing Non-Major Facility Modification in Syracuse**

## Subparts 231-7 & 8 Attainment Area NSR (PSD)

- **Example A-7: Existing Non-Major Facility Modification**

# Example A-1: Existing Major Facility Modification in Manhattan with No Contemporaneous Modifications Nonattainment (NA) Area NSR



Existing Facility PTE:

| | |
|---|---|
| VOC: | 5 tons |
| NOx: | 40 tons |
| PM-10 | 30 tons |

Facility's NOx PTE is above the major facility threshold of 25 tpy for severe ozone nonattainment and therefore is an existing major facility for NA contaminants (VOC, NOx, and PM-10) based on facility location (see maps of nonattainment areas in Appendix B).

| Modification PEP/NEI: | | SPT: | SNEIT: |
|---|---|---|---|
| VOC: | 4 tons | 2.5 tons | 25 tons |
| NOx: | 45 tons | 2.5 tons | 25 tons |
| PM-10: | 10 tons | 15 tons | 15 tons |

VOC and NOx for severe ozone nonattainment evaluated on FC-5A
PEP for VOC is greater than the significant project threshold but NEI is less than the significant net emission increase threshold so only sections 231-6.2 and 231-11.1 netting requirements apply to VOC.

PEP and NEI for NOx are greater than both the significant project and significant net emission increase thresholds and is subject to Subpart 231-6 for NOx.

PM-10 nonattainment evaluated on FC-6
PEP for PM-10 is less than the significant project threshold and therefore not subject to Subpart 231-6, however, the facility must still comply with the section 231-11.2 reasonable possibility provisions for PM-10.

Key:

| | |
|---|---|
| PTE: | Potential To Emit |
| PEP: | Project Emission Potential |
| NEI: | Net Emission Increase |
| SPT: | Significant Project Threshold |
| SNEIT: | Significant Net Emission Increase Threshold |

# Example A-2: Existing Major Facility Modification in Manhattan with Contemporaneous Modifications Nonattainment (NA) Area NSR



| | | Recent CEI and ERC at the facility | | | |
|---|---|---|---|---|---|
| Existing Facility PTE: | | 7/1/10 decrease: | | 1/1/09 increase: | |
| VOC: | 20 tons | VOC: | 3 tons | VOC: | 7 tons |
| NOx: | 50 tons | NOx: | 22 tons | NOx: | 20 tons |
| PM-10: | 10 tons | PM-10: | 3 tons | PM-10: | 4 tons |

Facility's NOx PTE is above the major facility threshold of 25 tpy and therefore is an existing major facility for NA contaminants (VOC, NOx, and PM-10) based on facility location (see maps of nonattainment areas in Appendix B).

| Modification PEP: | | SPT: | Modification NEI (PEP+CEI-ERC): | SNEIT: |
|---|---|---|---|---|
| VOC: | 2 tons | 2.5 tons | N/A (PEP < SPT) | 25 tons |
| NOx: | 45 tons | 2.5 tons | 45 + N/A - 22 = 23 tons | 25 tons |
| PM-10: | 17 tons | 15 tons | 17 + 4 – 3 = 18 | 15 tons |

Project scheduled to commence construction on 10/1/13 and commence operation on 3/1/14.

VOC and NOx for severe ozone nonattainment evaluated on FC-5A
Contemporaneous period starts at the beginning of the calendar year which is four calendar years prior to the calendar year in which the proposed modification is scheduled to commence operation and finishes at the end of the calendar year the proposed modification is scheduled to commence operation.
Contemporaneous period: 1/1/10 to 12/31/14

PEP for VOC is below significant project thresholds and are not subject to Subpart 231-6, however, the modification must comply with the reasonable possibility provisions in section 231-11.2.

PEP for NOx is greater than the significant project threshold but below the significant net emission increase threshold and, therefore, subject to sections 231-6.2 and 231-11.1 for netting.

PM-10 nonattainment evaluated on FC-6
Contemporaneous period starts on the date five annual periods (1825 consecutive days) prior to the date construction of the proposed modification is scheduled to commence and ends on the date the proposed modification is scheduled to commence operation.
Contemporaneous period: 10/1/08 to 3/1/14

PEP and NEI for PM-10 are greater than both the significant project and significant net emission increase thresholds and is subject to Subpart 231-6.

Key:

| | |
|---|---|
| CEI: | Creditable Emission Increase |
| ERC: | Emission Reduction Credit |
| PTE: | Potential To Emit |
| PEP: | Project Emission Potential |
| NEI: | Net Emission Increase |
| SPT: | Significant Project Threshold |
| SNEIT: | Significant Net Emission Increase Threshold |

# Example A-3: Existing Non-Major Facility Modification in Manhattan Nonattainment (NA) Area NSR



| Existing Facility PTE: | | MFT |
|---|---|---|
| VOC: | 7 tons | 25 tons |
| NOx: | 20 tons | 25 tons |
| PM-10: | 5 tons | 100 tons |

Facility's PTE is below the major facility threshold for all NA contaminants (VOC, NOx, and PM-2.5) and therefore is an existing non-major facility (not allowed to net out of NSR applicability).

Modification PEP:

| | |
|---|---|
| VOC: | 20 tons |
| NOx: | 75 tons |
| PM-10: | 20 tons |

VOC and NOx for severe ozone nonattainment evaluated on FC-8

PEP for VOC is less than the major facility threshold and is not subject to Subpart 231-5, however, the facility potential to emit after the modification is greater than the major facility threshold and an emission limit (in tons per year) for VOC set at the new potential to emit is required in the permit.

PEP for NOx is greater than the major facility threshold and is subject to Subpart 231-5.

PM-10 nonattainment evaluated on FC-9

PEP for PM-10 is less than the major facility threshold and are not subject to 231-5.

Key:

| | |
|---|---|
| PTE: | Potential To Emit |
| MFT: | Major Facility Threshold |
| PEP: | Project Emission Potential |

# Example A-4: Existing Major Facility Modification in Syracuse with No Contemporaneous Modifications Nonattainment (NA) Area NSR



Existing Facility PTE:
VOC: 25 tons
NOx: 140 tons

Facility's NOx PTE is above the major facility threshold of 100 tpy and therefore is an existing major facility for NA contaminants (VOC and NOx) based on facility location (see maps of nonattainment areas in Appendix B).

| Modification PEP/NEI: | | SPT/SNEIT: |
|---|---|---|
| VOC: | 4 tons | 40 tons |
| NOx: | 45 tons | 40 tons |

VOC and NOx for attainment portion of the ozone transport region evaluated on FC-7
PEP and NEI for VOC are below the significant project threshold and is not subject to 231-6 however the facility must still comply with section 231-11.2 reasonable possibility provisions.

PEP and NEI for NOx are greater than both the significant project and significant net emission increase thresholds and is subject to Subpart 231-6.

Key:

PTE: Potential To Emit
PEP: Project Emission Potential
NEI: Net Emission Increase
SPT: Significant Project Threshold
SNEIT: Significant Net Emission Increase Threshold

# Example A-5: Existing Major Facility Modification in Syracuse with Contemporaneous Modifications Nonattainment (NA) Area NSR



Existing Facility PTE:
VOC: 25 tons
NOx: 150 tons

Recent emission reduction credits at the facility:
1/1/10 decrease:
VOC: 3 tons
NOx: 20 tons

Facility's NOx PTE is above the major facility threshold of 100 tpy and therefore is an existing major facility for NA contaminants (VOC and NOx) based on facility location (see maps of nonattainment areas in Appendix B).

| Modification PEP: | | SPT: | Modification NEI (PEP+CEI-ERC): | SNEIT: |
|---|---|---|---|---|
| VOC: | 5 tons | 40 tons | N/A (PEP < SPT) | 40 tons |
| NOx: | 50 tons | 40 tons | 50 + N/A - 20 = 30 tons | 40 tons |

Project scheduled to commence construction on 10/1/13 and commence operation on 3/1/14.

VOC and NOx for attainment portion of the ozone transport region evaluated on FC-7
Contemporaneous period starts on the date five annual periods (1825 consecutive days) prior to the date construction of the proposed modification is scheduled to commence and ends on the date the proposed modification is scheduled to commence operation
Contemporaneous period: 10/1/08 to 3/1/14

PEP for VOC is below significant project threshold and is not subject to Subpart 231-6 however must comply with the reasonable possibility provisions in section 231-11.2.

PEP for NOx is greater than the significant project but less than the significant net emission increase thresholds and therefore subject to sections 231-6.2 and 231-11.1 for netting.

Key:

PTE: Potential To Emit
PEP: Project Emission Potential
NEI: Net Emission Increase
CEI: Creditable Emission Increase
ERC: Emission Reduction Credit
SPT: Significant Project Threshold
SNEIT: Significant Net Emission Increase Threshold

# Example A-6: Existing Non-Major Facility Modification in Syracuse Nonattainment (NA) Area NSR



| Existing Facility PTE: | | MFT: |
|---|---|---|
| VOC: | 40 tons | 50 tons |
| NOx: | 70 tons | 100 tons |

Facility's PTE is below the major source threshold for all NA contaminants and, therefore, is an existing non-major facility.

Modification PEP:
VOC: 20 tons
NOx: 125 tons

VOC and NOx for attainment portion of the ozone transport region evaluated on FC-10
PEP for VOC is less than the major facility threshold and is not subject to Subpart 231-5, however, the facility potential to emit after the modification is greater than the major facility threshold and an emission limit (in tons per year) for VOC set at the new potential to emit is required in the permit.

PEP for NOx is greater than the major facility threshold and, therefore, is subject to Subpart 231-5.

Key:

PTE: Potential To Emit
MFT: Major Facility Threshold
PEP: Project Emission Potential

# Example A-7: Existing Non-Major Facility Modification Attainment (PSD) Area NSR



The facility is one of the source categories listed in Appendix D, so the major facility threshold is 100 tons.

| Existing Facility PTE: | | MFT | | |
|---|---|---|---|---|
| CO: | 20 tons | 100 tons | | |
| $SO_2$: | 30 tons | 100 tons | | |
| PM: | 10 tons | 100 tons | | |
| Greenhouse Gases | | N/A | GWP: | |
| $CO_2$: | 90,000 tons | | $CO_2$: | 1 |
| $CH_4$: | 1 ton | | $CH_4$: | 25 |
| $N_2O$: | 1 ton | | $N_2O$: | 298 |
| $SF_6$: | 0.5 tons | | $SF_6$: | 22,800 |
| $GHG_m$: | 90,000 + 1 + 1 + 0.5 = 90,002.5 tons | | | |
| $GHG_e$: | (90,000)(1) + (1)(25) + (1)(298) + (0.5)(22,800) = 101,723 tons $CO_2e$ | | | |

Facility's PTE is below the major facility threshold for all regulated NSR contaminants and, therefore, is an existing non-major facility for the purposes of PSD.

| Modification PEP: | | SPT: |
|---|---|---|
| CO: | 120 tons | 100 tons |
| $SO_2$: | 45 tons | 40 tons |
| PM: | 15 tons | 25 tons |
| Greenhouse Gases | | |
| $CO_2$: | 140,000 tons | N/A |
| $CH_4$: | 2 tons | N/A |
| $N_2O$: | 0.5 tons | N/A |
| $SF_6$: | no increase | N/A |
| $GHG_m$: | 140,000 + 2 + 0.5 + 0 = 140,002.5 tons | any increase |
| $GHG_e$: | (140,000)(1) + (2)(25) + (0.5)(298) + (0)(22,800) = 140,199 tons $CO_2e$ | 75,000 tons $CO_2e$ |

PSD contaminants evaluated on FC-17

PEP for CO is above the major facility threshold and, therefore, subject to Subpart 231-7. PEP for SO2 and GHG are above the applicable significant project thresholds and, therefore, subject to Subpart 231-7. PEP for PM is below the applicable significant project threshold and, therefore, not subject to Subpart 231-7.

Key:

| | |
|---|---|
| PTE: | Potential To Emit |
| GWP: | Global Warming Potential |
| $GHG_m$: | Greenhouse Gas Mass Emissions |
| $GHG_e$: | Greenhouse Gas $CO_2$ Equivalent Emissions |
| $CO_2e$: | Carbon Dioxide Equivalents |
| PEP: | Project Emission Potential |
| NEI: | Net Emission Increase |
| SPT: | Significant Project Threshold |
| SNEIT: | Significant Net Emission Increase Thereshold |

# Appendix B: Maps of Nonattainment Areas in New York



- **Appendix B-1: 1-Hour Ozone Nonattainment Map**
- **Appendix B-2: PM-10 Nonattainment Map**

# Appendix B-1: 1-Hour Ozone Nonattainment Map



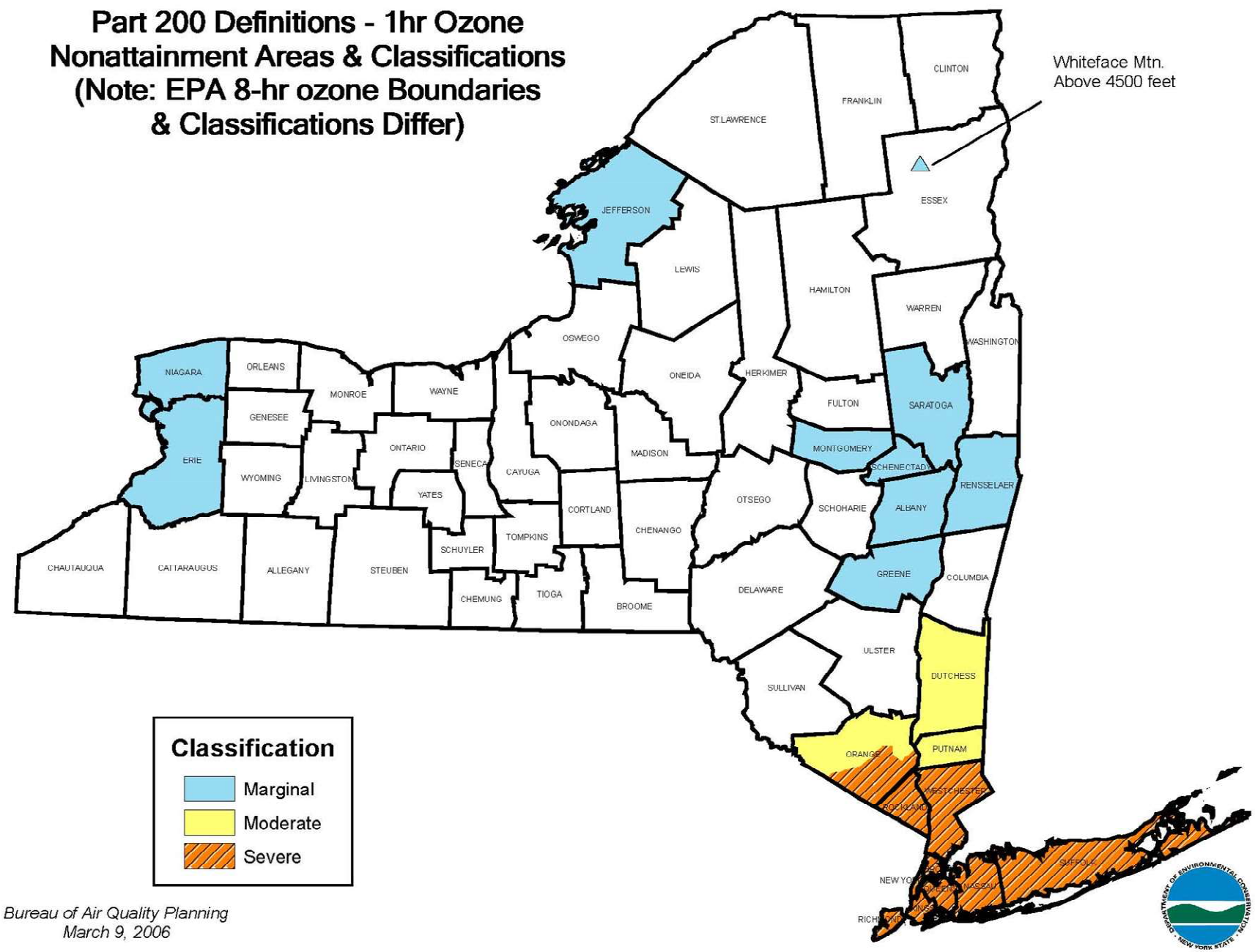

# Appendix B-2: PM-10 Nonattainment Map



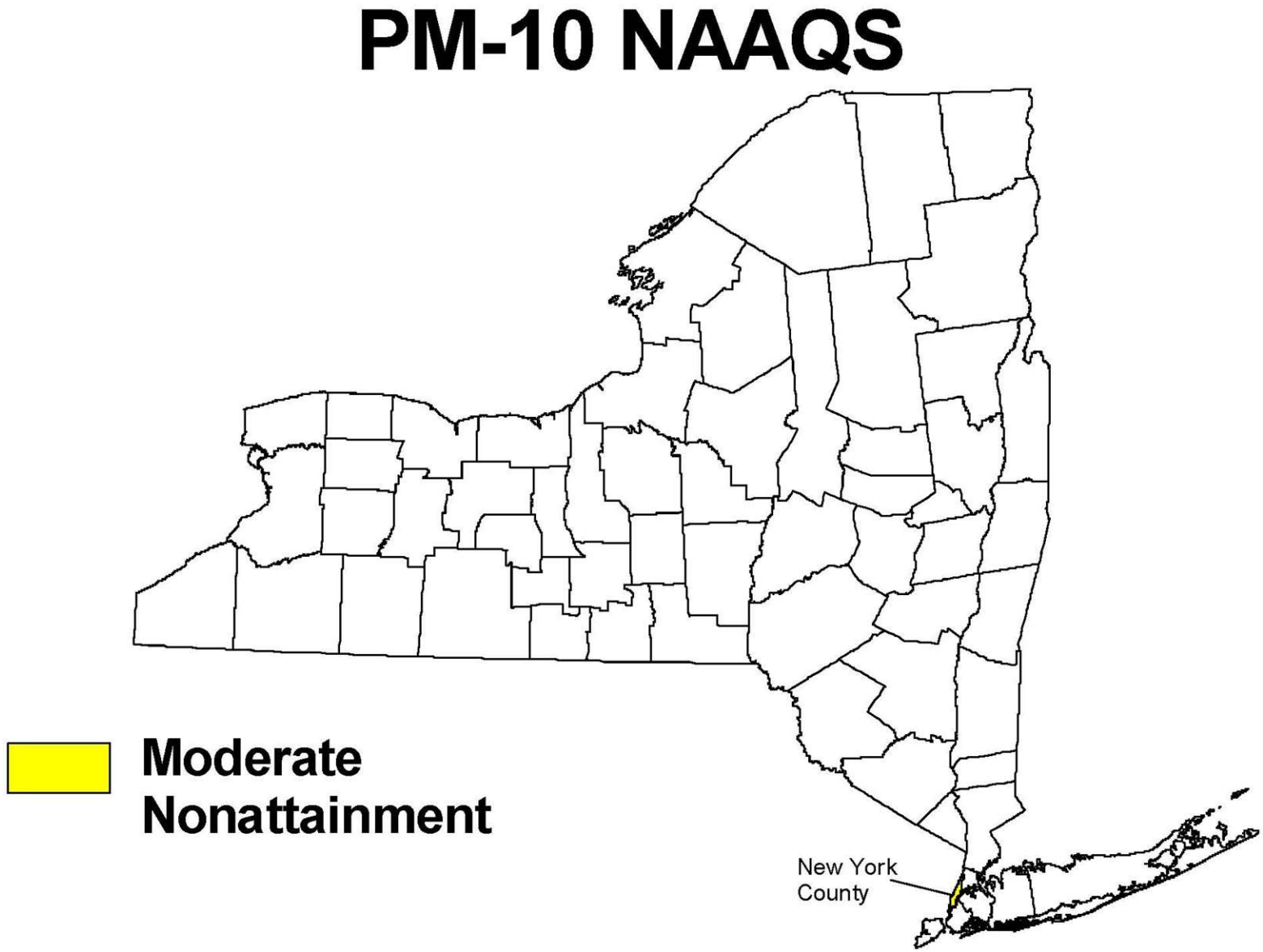

# Appendix C: Nonattainment (NA) Area NSR - Area/Contaminant Classification and Significant Net Emission Increase Thresholds Subparts 231-5 & 6



| Area/Contaminant Classification | Significant Net Emission Increase Threshold (tpy) |
|---|---|
| Marginal, Moderate, or Ozone Transport Region | |
| VOC | 40 |
| NOx | 40 |
| Severe | |
| VOC | > 25 |
| NOx | > 25 |

| Area/Contaminant Classification | Significant Net Emission Increase Threshold (tpy) |
|---|---|
| Moderate | |
| PM-10[1] | 15 |

[1] – both filterable and condensible fractions are to be included

# Appendix D: Attainment Area (PSD) NSR - Regulated NSR Contaminants, Significant Project/Significant Net Emission Increase Thresholds and Source Category List Subparts 231-7 & 8



| Regulated NSR Contaminant | Significant Project Threshold[1]/Significant Net Emission Increase Threshold |
|---|---|
| Carbon monoxide | 100 tpy |
| Nitrogen oxides | 40 tpy |
| Sulfur dioxide | 40 tpy |
| Particulate matter | 25 tpy |
| Particulate matter: PM-10 emissions[2] | 15 tpy |
| Particulate matter: PM-2.5 emissions[2] | 10 tpy |
| Ozone: as VOCs or NOx | 40 tpy |
| Lead (elemental) | 0.6 tpy |
| Fluorides | 3 tpy |
| Sulfuric acid mist | 7 tpy |
| Hydrogen sulfide (H2S) | 10 tpy |
| Total reduced sulfur (including H2S) | 10 tpy |
| Reduced sulfur compounds (including H2S) | 10 tpy |
| Municipal waste combustor organics (measured as total tetra through octa-chlorinated dibenzo-p-dioxin and dibenzofurans) | 3.2 x 10-6 megagrams per year (3.5 x 10-6 tpy) |
| Municipal waste combustor metals (measured as particulate matter) | 14 megagrams per year (15 tpy) |
| Municipal waste combustor acid gases (measured as sulfur dioxide and hydrogen chloride) | 36 megagrams per year (40 tpy) |
| Municipal solid waste landfills emissions (measured as nonmethane organic compounds) | 45 megagrams per year (50 tpy) |
| Greenhouse Gases | Any increase and 75,000 tpy[3, 4] |
| Any other regulated NSR contaminant | Any increase |

[1] - project emission potential threshold
[2] - both filterable and condensable fractions are to be included
[3] - measured as $CO_2$ equivalents
[4] - values only represent the significant project threshold as netting is not allowed for greenhouse gases

| Source Category List |
|---|
| Coal cleaning plants (with thermal dryers) |
| Kraft pulp mills |
| Portland cement plants |
| Primary zinc smelters |
| Iron and steel mills |
| Primary aluminum ore reduction plants |
| Primary copper smelters |
| Municipal incinerators capable of charging more than 50 tons of refuse per day |
| Hydrofluoric, sulfuric or nitric acid plants |
| Petroleum refineries |
| Lime plants |
| Phosphate rock processing plants |
| Coke oven batteries |
| Sulfur recovery plants |
| Carbon black plants (furnace process) |
| Primary lead smelters |
| Fuel conversion plants |
| Sintering plants |
| Secondary metal production plants |
| Chemical process plants (excluding ethanol production facilities that produce ethanol by natural fermentation included in NAICS codes 325193 or 312140 |
| Fossil-fuel boilers (or combination thereof) totaling more than 250 million British thermal units per hour heat input |
| Petroleum storage and transfer units with a total storage capacity exceeding 300,000 barrels |
| Taconite ore processing plants |
| Glass fiber processing plants |
| Charcoal production plants |
| Fossil-fuel-fired steam electric plants of more than 250 million British thermal units per hour heat input |

# Appendix E: Attainment Area (PSD) NSR - Global Warming Potential Values for Calculating $CO_2$ Equivalents Subparts 231-7 & 8



| Greenhouse Gas | Global Warming Potential |
|---|---|
| $CO_2$ | 1 |
| $CH_4$ | 25 |
| $N_2O$ | 298 |
| $SF_6$ | 22,800 |
| Hydrofluorocarbons | 12 to 14,800[1] |
| Perfluorocarbons | 6,288 to 17,700[1] |

To calculate GHG emissions based on mass, the mass emissions of each of the greenhouse gases is totaled together.

To calculated GHG emissions based on $CO_2$ equivalents, the mass emissions of each of the greenhouse gases is multiplied by their respective global warming potential to get emissions on a basis of $CO_2$ equivalents and then the $CO_2$ equivalents are summed across all of the greenhouse gases emitted (See Example A-7).

[1] see Table A-1 to Subpart A of 40 CFR Part 98 for specific values for Hydrofluorocarbons and Perfluorocarbons